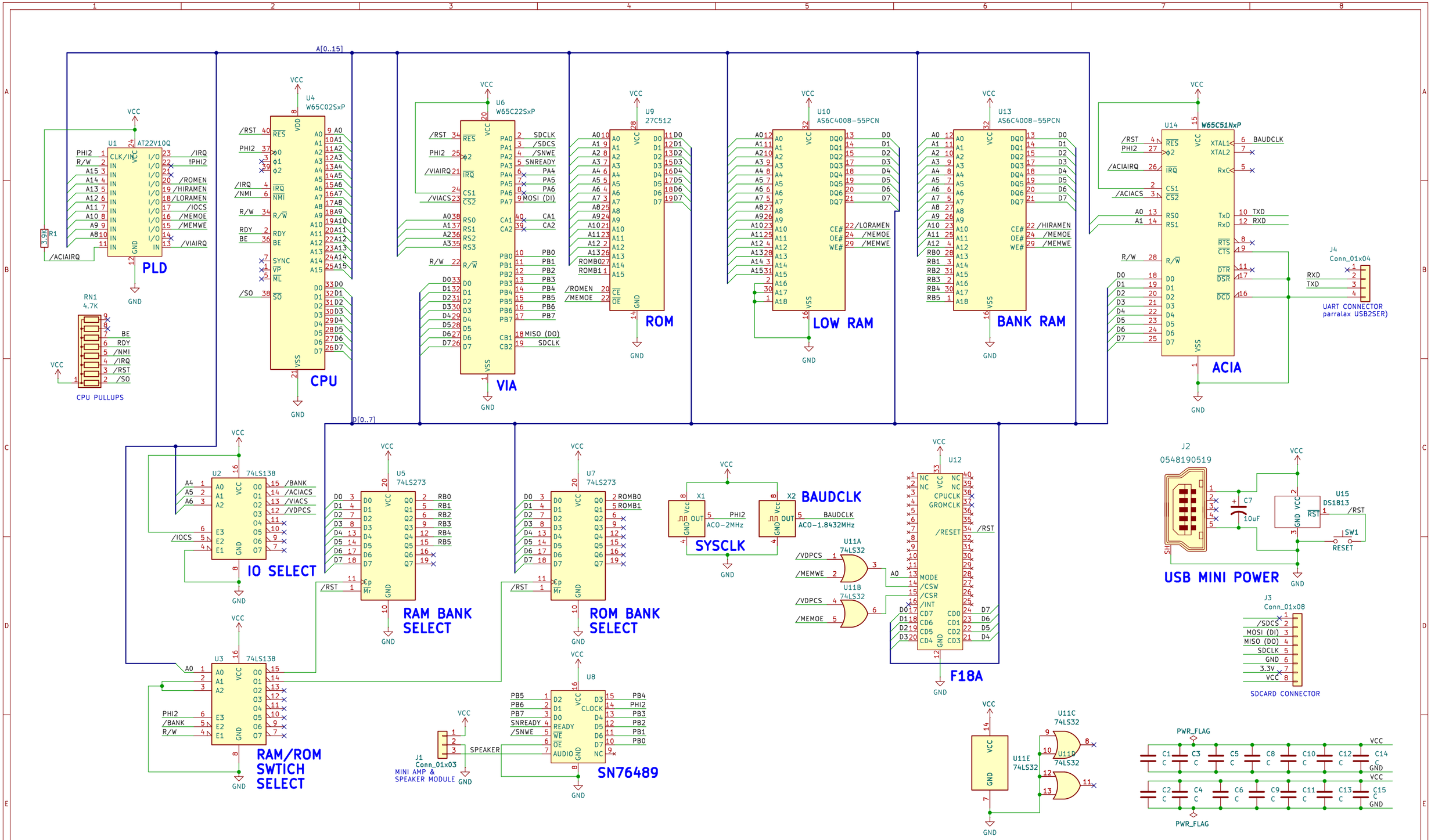

DAVID LATHAM (c) 2024

Sheet: /

File: 6502-Retro-Bank-V3-kicad8.kicad_sch

Title: 6502-RETRO-BANKED

Size: A3	Date:	Rev:
KiCad E.D.A. 8.0.0		Id: 1/1