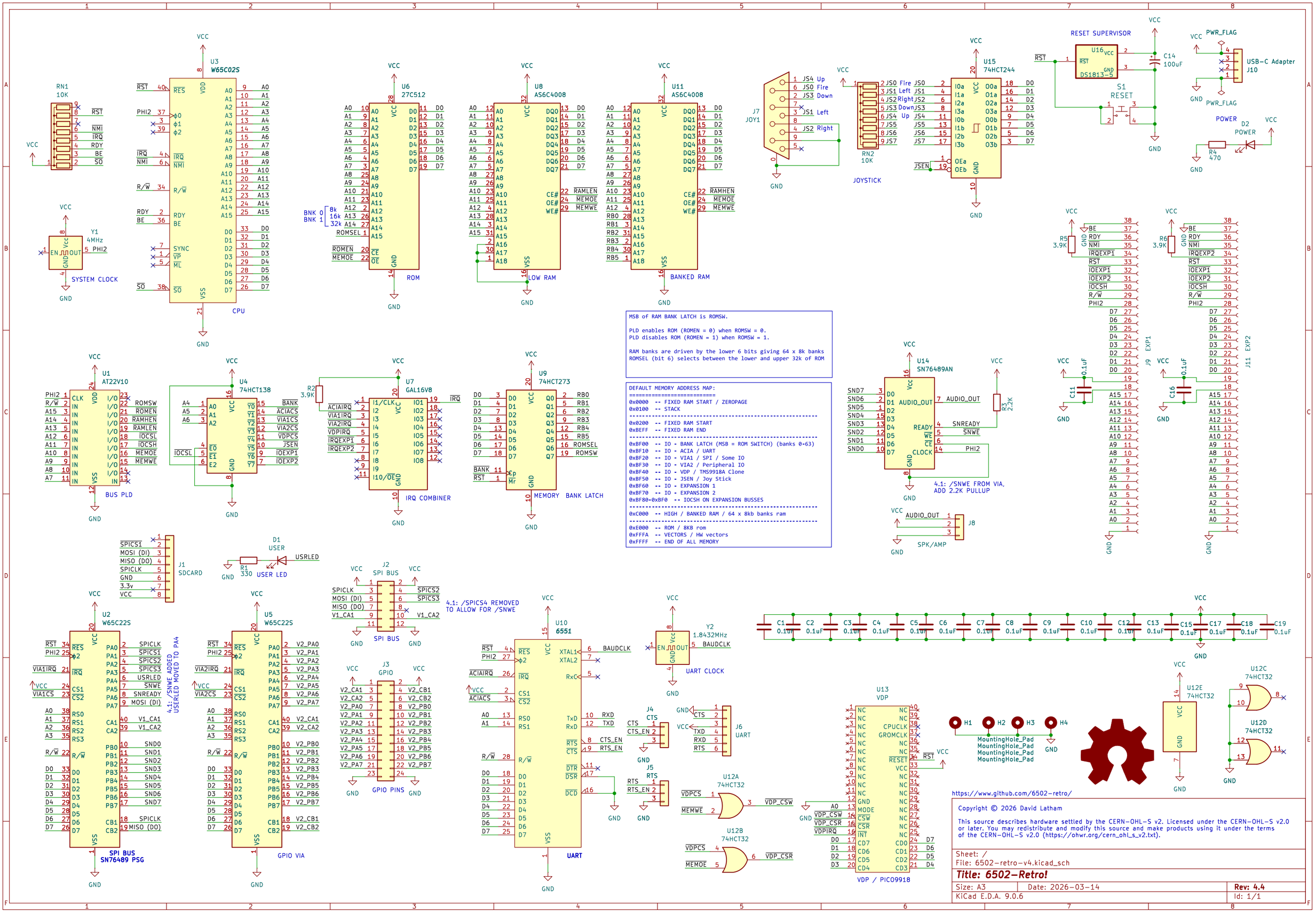
U3 W65C02S
CPU
U6 27C512
ROM
U8 AS6C4008
LOW RAM
U11 AS6C4008
BANKED RAM
U15 74HCT244
JOYSTICK
RESET SUPERVISOR
U16 DS1813-5
S1 RESET
USB-C Adapter J10
POWER
SYSTEM CLOCK
Y1 4MHz
U1 AT22V10
BUS PLD
U4 74HCT138
U7 GAL16V8
IRQ COMBINER
U9 74HCT273
MEMORY BANK LATCH
U14 SN76489AN
4.1: /SNWE FROM VIA, ADD 2.2K PULLUP
J8 SPK/AMP
J9 EXP1
J11 EXP2
J1 SDCARD
D1 USER
R1 330 USER LED
J2 SPI BUS
4.1: /SPICS4 REMOVED TO ALLOW FOR /SNWE
J3 GPIO
GPIO PINS
U2 W65C22S
SPI BUS SN76489 PSG
4.1: /SNWE ADDED USERLED MOVED TO PA4
U5 W65C22S
GPIO VIA
U10 6551
UART
Y2 1.8432MHz
UART CLOCK
J4 CTS
J5 RTS
J6 UART
U12A 74HCT32
U12B 74HCT32
U12C 74HCT32
U12D 74HCT32
U12E 74HCT32
U13 VDP
VDP / PIC09918
MSB of RAM BANK LATCH is ROMSW.
PLD enables ROM (ROMEN = 0) when ROMSW = 0.
PLD disables ROM (ROMEN = 1) when ROMSW = 1.
RAM banks are driven by the lower 6 bits giving 64 x 8k banks
ROMSEL (bit 6) selects between the lower and upper 32k of ROM
DEFAULT MEMORY ADDRESS MAP:
0x0000 -- FIXED RAM START / ZEROPAGE
0x0100 -- STACK
0x0200 -- FIXED RAM START
0xBEFF -- FIXED RAM END
0xBF00 -- IO - BANK LATCH (MSB = ROM SWITCH) (banks 0-63)
0xBF10 -- IO - ACIA / UART
0xBF20 -- IO - VIA1 / SPI / Some IO
0xBF30 -- IO - VIA2 / Peripheral IO
0xBF40 -- IO - VDP / TMS9918A Clone
0xBF50 -- IO - JSEN / Joy Stick
0xBF60 -- IO - EXPANSION 1
0xBF70 -- IO - EXPANSION 2
0xBF80-0xBF0 -- IOCSH ON EXPANSION BUSSES
0xC000 -- HIGH / BANKED RAM / 64 x 8kb banks ram
0xE000 -- ROM / 8KB rom
0xFFFA -- VECTORS / HW vectors
0xFFFF -- END OF ALL MEMORY
https://www.github.com/6502-retro/
Copyright © 2026 David Latham
This source describes hardware settled by the CERN-OHL-S v2. Licensed under the CERN-OHL-S v2.0 or later. You may redistribute and modify this source and make products using it under the terms of the CERN-OHL-S v2.0 (https://ohwr.org/cern_ohl_s_v2.txt).
Sheet: /
File: 6502-retro-v4.kicad_sch
Title: 6502-Retro!
Size: A3
Date: 2026-03-14
Rev: 4.4
KiCad E.D.A. 9.0.6
Id: 1/1