TRIBHUVAN UNIVERSITY

INSTITUTE OF ENGINEERING

THAPATHALI CAMPUS

A MINOR PROJECT PROGRESS REPORT ON BRAIN COMPUTER INTERFACE FOR TEXT ENTRY USING EEG FREQUENCY BAND ANALYSIS

Submitted By:

Anup Ghimire	(THA079BEI004)
Rohit Dhourali	(THA079BEI031)
Sudin Barakoti	(THA079BEI041)
Swastik Rai	(THA079BEI045)

Submitted To:

Department of Electronics and Computer Engineering

Thapathali Campus

Kathmandu, Nepal

February 2026

TRIBHUVAN UNIVERSITY

INSTITUTE OF ENGINEERING

THAPATHALI CAMPUS

A MINOR PROJECT PROGRESS REPORT ON BRAIN COMPUTER INTERFACE FOR TEXT ENTRY USING EEG FREQUENCY BAND ANALYSIS

Submitted By:

Anup Ghimire	(THA079BEI004)
Rohit Dhourali	(THA079BEI031)
Sudin Barakoti	(THA079BEI041)
Swastik Rai	(THA079BEI045)

Submitted To:

Department of Electronics and Computer Engineering

Thapathali Campus

Kathmandu, Nepal

In partial fulfillment for the award of the

Bachelors Degree in Electronics, Communication and Information Engineering

Under the Supervision of

Er. Praches Acharya

February 2026

ACKNOWLEDGEMENT

We would like to express our sincere gratitude to the Department of Electronics and Computer Engineering, Institute of Engineering, Thapathali Campus, for providing us the opportunity to carry out this minor project. This project has helped us gain practical knowledge and improve our understanding of theoretical concepts.

We would like to thank our project supervisor **Er.Praches Acharya** for his valuable guidance, continuous support, and helpful suggestions throughout the project period. His guidance helped us to stay on the right path and successfully complete this work.

We are also thankful to all the teachers and staff members of the department for their support and cooperation during the project. Their encouragement and assistance played an important role in completing this project. We would like extend our sincere thanks to our friends and family members for their motivation, cooperation, and moral support throughout the project duration.

Anup Ghimire (THA079BEI004)
Rohit Dhourali (THA079BEI031)
Sudin Barakoti (THA079BEI041)
Swastik Rai (THA079BEI045)

ABSTRACT

A Brain Computer Interface (BCI) lets a person control a computer or device directly using brain signals which are recorded from the scalp using EEG electrodes. In this project, a low cost EEG-based BCI typing system is designed using eye blinks and alpha brain waves as control signals unlike complex systems that use visual stimuli or machine learning, this system focuses on simplicity, affordability and ease of use.EEG signals are collected using few electrodes and processed with basic signal processing techniques. Eye blinks create large changes in the EEG signal and are used for selecting or confirming actions like alpha waves which occur in the 8–12 Hz range. Waves generated from the brain through electrodes are analyzed using Fast Fourier Transform (FFT) to detect if the user is relaxed or focused. A simple stimulus based method can map these signals to typing and selection of commands for interfacing.The goal of this project is to create a working BCI typing system while learning how to record, filter and extract features from EEG signals as well as integrate them into a usable system. BCI can be helpful for people with movement difficulties and for situations where hands free control is preferred.

***Keywords**: BCI, Electroencephalogram (EEG), Fast Fourier Transform (FFT), Signal Processing, Typing Interface*

TABLE OF CONTENTS

ACKNOWLEDGEMENT . . . . . **i**

ABSTRACT . . . . . **ii**

LIST OF FIGURES . . . . . **v**

LIST OF TABLES . . . . . **vi**

1. Introduction **1**
1.1. Background 1
1.2. Motivation 1
1.3. Problem Statement 2
1.4. Objectives 2
1.5. Scope and Limitations 2

2. LITERATURE REVIEW **4**
2.1. Existing Works 4
2.2. EEG Based BCI 4
2.3. Brain Waves and Their Relevance to the Proposed BCI System 5
2.4. Electroencephalography 6

3. REQUIREMENTS ANALYSIS **8**
3.1. Biopotential Electrodes 8
3.2. Instrumentation Amplifier 9
3.3. Types of Filters 10
3.4. Arduino Microcontroller 10
3.5. FFT and MATLAB (Signal Processing and Visualization) 11

4. SYSTEM ARCHITECTURE AND METHODOLOGY **12**
4.1. System Block Diagram/Architecture 12
4.2. Description of Working Principle 13
4.3. Flowchart of Proposed System Architecture 14
4.4. EEG Electrode Placement and Signal Acquisition 15
4.5. Instrumentation Amplifier (AD620) Design and Implementation 16
4.6. Filter Design and Signal Conditioning 17
4.7. Microcontroller Based Data Acquisition and Communication 19
4.8. Arduino Timer Specifications 20
4.9. Frequency Domain Analysis Using Fast Fourier Transform (FFT) . . . 21
4.10. Discrete Fourier Transform (DFT) and Fast Fourier Transform (FFT) . . 21

4.11. Windowing – Hann Window 22
4.12. Processing After Fast Fourier Transform (FFT) 24

5. EXPECTED OUTCOME 25

6. IMPLEMENTATION DETAILS 26
6.1. Hardware Components and Their Functioning 26
6.2. Software Components and Their Functioning 28
6.3. Calibration Process of Each Module 30
6.4. Interfacing Technicalities and Protocols 30

7. RESULTS AND ANALYSIS 34
7.1. EEG Signal Acquisition Result 34
7.2. Filtered Signal Analysis 34
7.3. Frequency Domain Analysis Using FFT 35
7.4. Alpha Band Detection Result 35
7.5. System Limitation and Current Status 35
7.6. Discussion 36

8. REMAINING TASKS 37
8.1. Dual Rail Power Supply / Rail Splitting Circuit Design 37
8.2. Real Time Eye Blink Detection Using EEG Electrodes 37
8.3. Keyboard Interface Development Using Matplotlib 37

A. APPENDICES 38
A.1. Project Schedule 38
A.2. Budget Estimation 39
A.3. Circuit Diagram 40
A.4. Module Specifications 42
A.5. Code Snippets: 44

REFERENCES 46

LIST OF FIGURES

Figure 2-1. An example of the stimulation frequency arrangements (Image from H. Han Jeong [5]) 5
Figure 2-2. An example of the stimulation frequency arrangements (Image from H. Han Jeong [5]) 7
Figure 3-1. Biopotential Electrodes 8
Figure 3-2. Simplified Schematic of AD620 Source: [12] 9
Figure 4-1. System Block Diagram of the Brain Computer Typing Interface . . . 12
Figure 4-2. Flowchart of Proposed System Architecture 14
Figure 4-3. 6th-order Butterworth band pass filter's frequency response 18
Figure 4-4. 50 Hz Notch Filter frequency response 19
Figure 4-5. Flowchart of Proposed System Architecture 20
Figure 4-6. Hann Window 23
Figure 4-7. Discontinuous wave during window transition 23
Figure 4-8. Continuity due to Hann window application on 4-7 24
Figure 7-1. Frequency Response of Circuit 34
Figure A-1. Project Gantt Chart 38
Figure A-2. AD620 (Instrumentation Amplifier) 40
Figure A-3. 6th order butterworth filter using lm741 41

LIST OF TABLES

Table 2-1. EEG frequency bands and associated mental states-Image Source: M.G.N.Garcia et al [2]) 6
Table 6-1. Bit-reversal permutation for $N = 8$ FFT 32
Table 7-1. Frequency Response Data 35
Table A-1. Bill of Materials for EEG Acquisition Module 39
Table A-2. EEG Signal Acquisition Module 42
Table A-3. Instrumentation Amplifier Module (AD620) 42
Table A-4. Signal Conditioning Module (Filters) 42
Table A-5. Data Acquisition and Processing Module Specifications 43
Table A-6. EEG Signal Processing Module Specifications 43

LIST OF ABBREVIATIONS

ADC	Analog to Digital Converter
BCI	Brain Computer Interface
BOLD	Blood Oxygen Level Dependent
ECoG	Electrocorticography
EEG	Electroencephalogram
ERP	Event Related Potential
FFT	Fast Fourier Transform
fMRI	Functional Magnetic Resonance Imaging
Hz	Hertz
MEG	Magnetoencephalography
NIRS	Near Infrared Spectroscopy
SAR	Successive Approximation Register
SCP	Slow Cortical Potential
SMR	Sensorimotor Rhythm
SSVEP	Steady State Visual Evoked Potential
VEP	Visual Evoked Potential

1. INTRODUCTION

1.1. Background

Some people have imagined controlling devices with just a thought from the head, some wanted it for fascination while some have necessities. And that is where the Brain Computer Interface comes in. Brain Computer Interface (BCI) is that system that allows a person to control a computer or device using brain signals. It allows a person to interact with a computer without using keyboard, mouse or touchscreen. BCIs are a very beneficial tool because they can be used for assisting communication, medical rehabilitation and hands free computer interfacing.

Electroencephalography (EEG) is commonly used for non invasive BCI systems as it records the electrical activity of the brain using electrodes placed on the scalp. It is the go to method because it is safe, low cost and portable but EEG signals are very small and easily affected by noise, so careful signal processing is necessary.

Different BCI methods focus on certain EEG features, such as event related signals, visual responses or natural brain rhythms, to interpret the user's intent such as alpha brain waves, which appear in the 8-12 Hz range and are usually linked to relaxed or unfocused states. When a person is focused, alpha waves decrease which makes alpha activity useful as a simple control signal for measuring attention. Eye blinks also create strong and easy to detect signals in EEG recordings, especially at the front of the head and can be used as intentional commands. Combining alpha wave analysis with eye blink detection, a simple and reliable BCI control method can be achieved without using complex classification techniques. Based on these ideas, this project focuses on developing a low cost and easy to use EEG based BCI typing system. The ultimate goal is to apply simple signal processing techniques like filtering and frequency analysis while avoiding or using few expensive equipment and advanced machine learning methods.

1.2. Motivation

The main motivation for this project comes from the need for affordable and easy to use assistive technologies that support hands free communication for people in need. Signal filtering, processing and many other important elements can be implemented which enhances our capability. Beyond technology and skill it also serves in building and advancing our society by empowering the individuals giving them tools to communicate, interact and participate more fully in everyday life.

Another motivation is to explore whether BCI control can be achieved using basic EEG signals and low cost hardware. When eye blinks alpha waves are among the easiest EEG features to detect and understand compared to other brain signals. Using these signals

along with simple processing techniques like filtering and Fast Fourier Transform (FFT), it is possible to build a BCI system that is easy to set up and use.

This project is also motivated by the desire to gain hands on experience in recording and processing EEG signals. Creating a basic BCI typing interface helps understand real world challenges such as noisy signals, device limitations, market limitations, economic feasibility and so on. Overall, this project aims to create an effective BCI system with less complex machine learning or expensive equipment and simple approach to demonstrate the core ideas of brain computer interaction.

1.3. Problem Statement

Regular computer typing and interaction is dependent upon physical devices like keyboards and mice. But these devices are not suitable for people with motor disabilities or situations that require hands free operation. Brain Computer Interface (BCI) systems can offer a solution but many existing EEG based BCI typing systems depend on expensive equipment, complex signal processing or machine learning models that need large amounts of data and long training which makes them hard to use in low budget, academic or experimental environments.

The main problem that our project aims to address is the absence of a simple and affordable BCI typing system that works with simple EEG hardware and fundamental signal processing techniques. On the other hand, the important element to explore is whether eye blink detection and alpha wave analysis can reliably control a basic typing or text selection interface without advanced classification algorithms and the difficult challenge is to extract meaningful control signals from noisy EEG data using only a few electrodes while keeping the system reliable and easy to use.

This project aims to solve this problem by designing and testing a low complexity EEG based BCI typing system suitable for educational and assistive purposes.

1.4. Objectives

The main objectives of this project are as follows:

- To design a simple and low cost EEG based Brain Computer Interface system
- To analyze EEG frequency bands using basic filtering and FFT
- To develop a basic text entry using detected EEG signals.

1.5. Scope and Limitations

This project focuses on designing and building a simple EEG based BCI typing or text selection system using eye blink detection and alpha wave analysis via non invasive EEG

signal recording, digital filtering, FFT based feature extraction and basic stimuli based decision making. Only a few EEG channels are used to make the system low cost and easy to set up.

The project does not aim for high typing speed or commercial level accuracy. Advanced machine learning, large scale testing and clinical validation are not included. The system is mainly intended for educational, experimental and proof of concept purposes demonstrating the basic ideas of BCI and signal processing.

Possible applications of this BCI typing system include:

- Assistive communication for people with limited motor abilities
- Hands free computer control where keyboards or mice are not practical
- Educational demonstrations for learning EEG signal processing and BCI fundamentals
- Student and research projects focusing on low cost neuroscience or biomedical engineering experiments
- Experimental platforms for further development of more advanced BCI.

2. LITERATURE REVIEW

2.1. Existing Works

Brain computer interfaces (BCIs) are systems which allow communication between a user and a computer using brain signals from user. There are different type of BCI, which use different methods to observe their user's brain activity:

- Electroencephalogram (EEG) based, such as this project
- Magnetoencephalography (MEG) based
- Electrocorticography (ECoG) based
- Functional magnetic resonance imaging (fMRI) based
- Near infrared spectroscopy (NIRS) based

EEG is non invasive and measures the electrical activity produced using the brain by electrode placed on the surface of the scalp. EEG will be discussed in greater detail in a later chapter. ECoG is invasive and places the electrodes on the surface of the brain to measure the electrical activity produced. ECoG can give higher temporal and spatial resolution compared to EEG but as it is invasive so is outside the scope of this project. MEG, fMRI and NIRS are all non invasive but were also outside the scope of the project due to the cost equipment but will be discussed briefly. MEG measures the magnetic disturbances caused by neural activity. fMRI applies electromagnetic fields around the head and in BCI systems it typically measures the blood oxygen level dependent (BOLD) during neural activity. Lastly, NIRS uses infrared light when can penetrate the skull by a few centimetres and measures the light reflected. The light reflected which varies depending on the oxyhemoglobin and deoxyhemoglobin concentrations. All of the above descriptions can be found in more detail in [4].

2.2. EEG Based BCI

Returning to EEG based BCIs, various EEG signals have been used to control a computer such as visually evoked potentials (VEP), slow cortical potentials (SCPs), P300 evoked potentials and sensorimotor rhythms (SMR). BCIs are more commonly based on VEPs and SMRs and will be discussed below.

VEPs are electrical responses in the occipital lobe (back of the head), produced as a direct response to a visual stimulus. A fixed frequency flashing stimulus causes an ongoing oscillatory VEP, which is referred to as a steady state visually evoked potential (SSVEP). This project focuses on an non VEP based BCI. An example of an SSVEP based BCI is the QWERTY style LED keyboard created by H. Yuan and B. He, "Brain Computer Interfaces Using Sensorimotor Rhythms: Current State and Future Perspectives" [5].

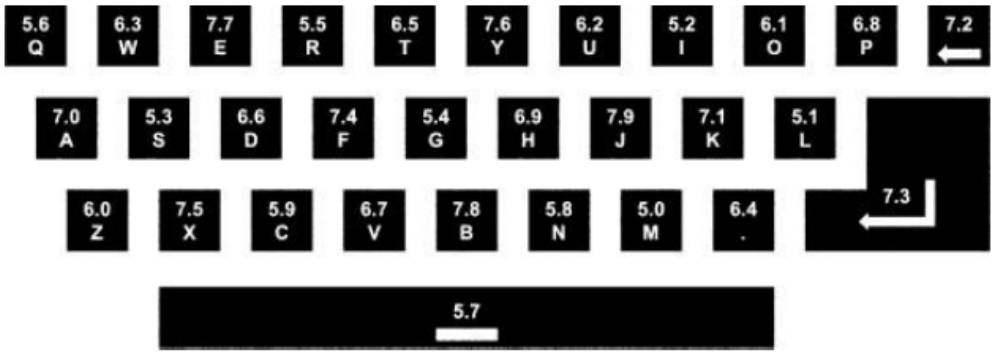

Figure 2-1. An example of the stimulation frequency arrangements (Image from H. Han Jeong [5])

Each key on the keyboard has an LED behind it, flashing at a different frequency and the key the user is looking at can be discerned from looking at the FFT of the user occipital EEG.

2.3. Brain Waves and Their Relevance to the Proposed BCI System

Electroencephalography (EEG) records the electrical activity of the brain in the form of brain waves, which are classified into distinct frequency bands, each reflecting specific mental and physiological states. Delta waves (0.1–3 Hz) are the slowest and are primarily observed during deep, dreamless sleep or unconscious states. Theta waves (4–7 Hz) are associated with creativity, imagination, memory recall, and light sleep or dreaming states, often reflecting a relaxed yet internally focused mind. Alpha waves (8–12 Hz) occur when a person is awake but relaxed, typically increasing when eyes are closed and diminishing during concentration. Low Beta waves (12–15 Hz) correspond to relaxed yet focused mental activity, while Midrange Beta waves (16–20 Hz) reflect active thinking, problem solving, and high awareness of the surroundings. High Beta waves (21–30 Hz) are linked to intense alertness, stress, or agitation, whereas Gamma waves (30–100 Hz) are related to higher level cognitive functions, such as information processing, learning, and memory integration. In the context of the proposed brain–computer interface (BCI) system, alpha waves are the primary focus for control, as they exhibit clear and measurable changes between relaxed and focused states, allowing reliable and simple EEG based interaction. While the system does not directly use other frequency bands for control, understanding the full spectrum of EEG activity is essential for filtering noise, identifying artifacts, and ensuring accurate detection of alpha and beta activity, thereby enhancing the overall performance of the BCI system.

Table 2-1. EEG frequency bands and associated mental states-Image Source: M.G.N.Garcia et al [2])

Rhythm	Signal appearance	Main behavioral trait
Gamma 30-100 Hz	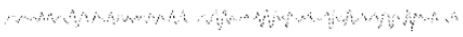	Represents binding of different populations of neurons for the purpose of carrying out a certain
Beta 13-30 Hz		Usual waking rhythm associated with active thinking and active
Alpha 8-13 Hz		It is usually found over the occipital regions. Indicates relaxed awareness without attention or
Theta 4-8 Hz		Theta waves appear as consciousness slips towards drowsiness. Theta increases have
Delta 1-4 Hz	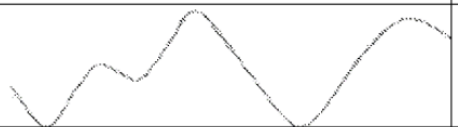	Primarily associated with deep (slow) wave sleep.

2.4. Electroencephalography

An EEG, or electroencephalogram, is a machine that can measure the tiny electrical signals our brain makes. We put small electrodes on the scalp to record these signals. People use EEGs for many things like checking if someone is awake, seeing how they react to things around them, or finding sleep and brain problems. Lately, scientists started using EEG signals to control computers, which is called a BCI system [1].

The signals an EEG picks up depend on where the electrodes are placed and what the brain is doing at that moment. This is because different parts of the brain do different jobs. The most common way to put the electrodes on the head is called the 10-20 system [2].

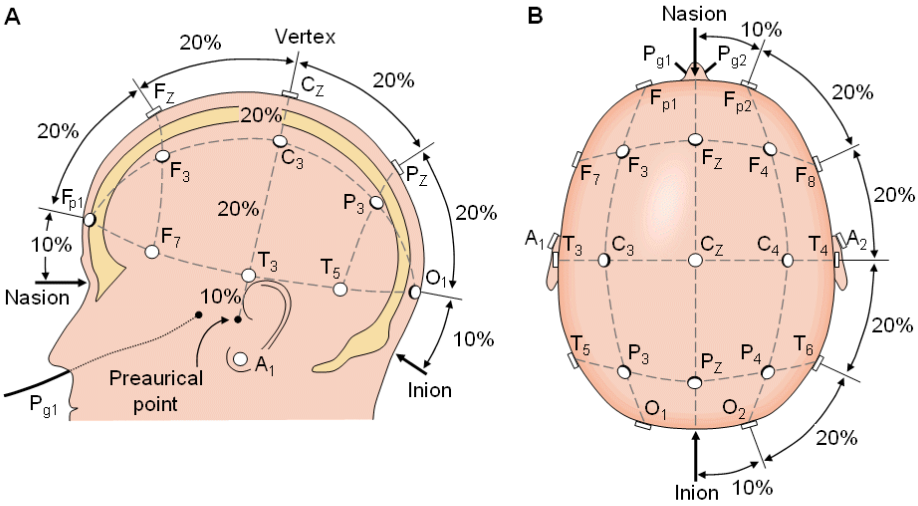

Figure 2-2. An example of the stimulation frequency arrangements (Image from H. Han Jeong [5])

3. REQUIREMENTS ANALYSIS

3.1. Biopotential Electrodes

Biopotential electrodes are used to measure small electrical signals produced inside the human body. These signals come from active cells such as brain cells and muscle cells. In EEG systems, two electrodes are used for each channel to measure the changing voltage on the scalp. This can be done by measuring the voltage between two points on the head, called bipolar configuration, or between one point on the head and a reference point like the ear, called unipolar configuration [2].

Biopotential electrodes are mainly divided into two types: wet electrodes and dry electrodes. Wet EEG electrodes are usually small cup shaped electrodes filled with conductive gel. The gel helps the electrode make good contact with the scalp, even through hair. Dry electrodes do not use gel. Instead, they have small teeth like structures that pass through the hair and touch the scalp directly.

Wet electrodes can become uncomfortable if used for a long time because the gel can dry out and needs to be cleaned properly. When the gel dries, the signal quality becomes poor and the skin may feel irritated. Dry electrodes are generally more comfortable and easier to use because they do not require gel. However, they are more affected by body movement and usually have higher resistance between the skin and the electrode [3].

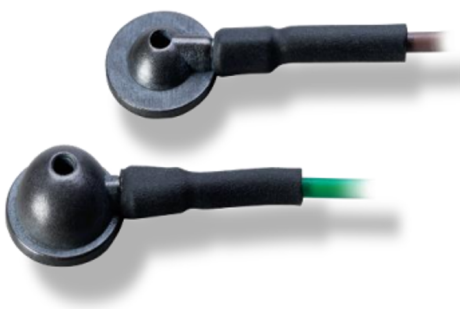

(a) Wet EEG cup electrodes - Images from Kandel Medical [9]

(b) Dry Electrode Electrodes - Image from Guger Technologies [9]

Figure 3-1. Biopotential Electrodes

EEG electrodes can also be made from different materials, such as silver/silver chloride, gold, silver, stainless steel, and tin. Reusable EEG electrodes are often expensive and can cost ten dollars or more per electrode [9]. To reduce the overall cost of the project, low cost and homemade electrodes were used.

Another way to classify EEG electrodes is as active or passive. Active electrodes include a small amplifier near the electrode itself. This helps reduce noise caused by poor contact with the skin and movement of wires [10]. Passive electrodes do not have this amplifier and are connected directly to the bio signal amplifier using long wires.

3.2. Instrumentation Amplifier

An instrumentation amplifier is used to amplify very small EEG signals obtained from the scalp electrodes. Brain signals are very weak and cannot be directly processed by filters or other circuits. Therefore, an instrumentation amplifier is used as the first stage of signal conditioning in this project.

In this system, the AD620 instrumentation amplifier is used because it is specially designed for low level bio potential signal amplification such as EEG. AD620 has high input impedance, which prevents loading of the electrodes and helps maintain signal quality. It also has high common mode rejection, which reduces unwanted noise such as power line interference and motion related noise.

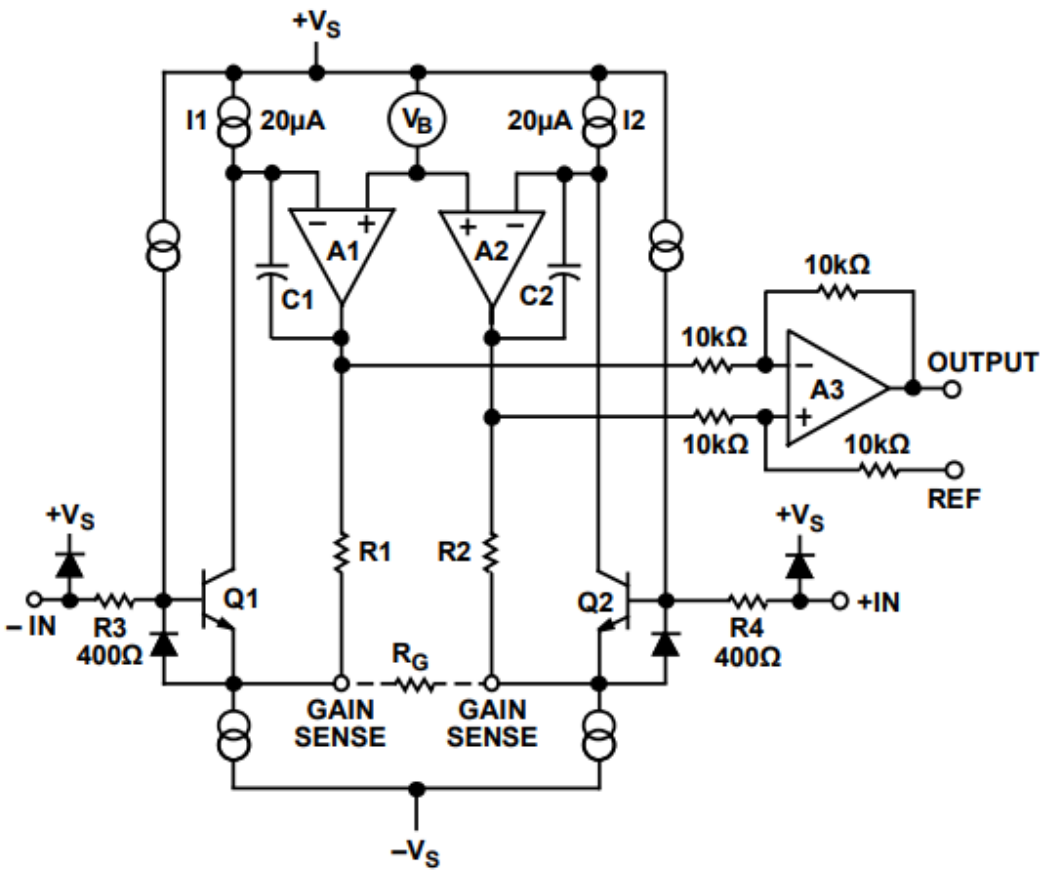

Figure 3-2. Simplified Schematic of AD620 Source: [12]

The gain of AD620 can be easily adjusted using a single external resistor, which makes the circuit simple and flexible. AD620 also has low noise, low power consumption, and stable performance, making it suitable for continuous EEG signal acquisition.

By using the AD620 instrumentation amplifier, the small voltage difference between EEG electrodes is amplified accurately while rejecting common noise signals. This improves signal clarity and makes the EEG signal suitable for further filtering and processing in the Brain Computer Interface system.

3.3. Types of Filters

Filters are used in the EEG system to remove unwanted noise and keep only the useful brain signals. EEG signals are very small and easily affected by noise such as power line interference, muscle movement, and other electrical disturbances. Therefore, filters are an important part of signal conditioning.

In this project, a band pass filter is used. The band pass filter allows only the required EEG frequency range to pass while blocking very low and very high frequencies. This helps remove slow drift noise and high frequency noise from the signal.

A low pass filter is used to remove high frequency noise such as muscle activity and external electrical interference. This makes the EEG signal smoother and easier to analyze.

A high pass filter is used to remove very low frequency noise caused by body movement and baseline drift. This helps stabilize the signal and improves signal clarity.

A notch filter is used to remove power line interference at 50 Hz. This is important because electrical noise from power supply lines can strongly affect EEG signals.

In this project, simple analog filters are used because they are easy to design and suitable for low cost systems. These filters provide sufficient noise reduction for detecting eye blink and basic EEG frequency bands without using complex signal processing techniques.

3.4. Arduino Microcontroller

Once the EEG signal is digitized, the microcontroller stores the sampled data in memory and processes it in short time windows. Basic signal processing operations such as amplitude thresholding are applied in the time domain to detect eye blink events. For frequency domain analysis, the microcontroller executes the Fast Fourier Transform (FFT) algorithm on the digital EEG data to analyze the spectral content of the signal.

Since eye blinks produce strong low frequency components, the microcontroller identifies these patterns by examining the FFT output or power spectrum.

After detecting valid brain or eye blink commands, the microcontroller makes decisions based on predefined logic and generates appropriate output signals. These outputs may be used to control external devices such as a cursor, virtual keyboard, or indicator LEDs. Additionally, the microcontroller handles data communication with a computer or display module, enabling visualization and further analysis of EEG signals. Thus, the microcontroller plays a crucial role in data acquisition, signal processing, decision making, and system control in the BCI project.

3.5. FFT and MATLAB (Signal Processing and Visualization)

Fast Fourier Transform (FFT) is used in this project to convert EEG signals from the time domain to the frequency domain. Frequency domain analysis is required to identify and extract specific EEG frequency bands, particularly the alpha band (8–12 Hz), which is associated with relaxation and attention states.

The EEG data received from Arduino is processed in MATLAB, where FFT is applied to calculate the power spectral density of the signal. Based on the magnitude of alpha band activity, the system determines the user's mental state.

MATLAB plotting functions are used to visualize time domain EEG signals and frequency spectra, which helps in analyzing system performance and validating the effectiveness of signal processing techniques. MATLAB provides a flexible and efficient environment for implementing FFT and EEG data visualization.

4. SYSTEM ARCHITECTURE AND METHODOLOGY

4.1. System Block Diagram/Architecture

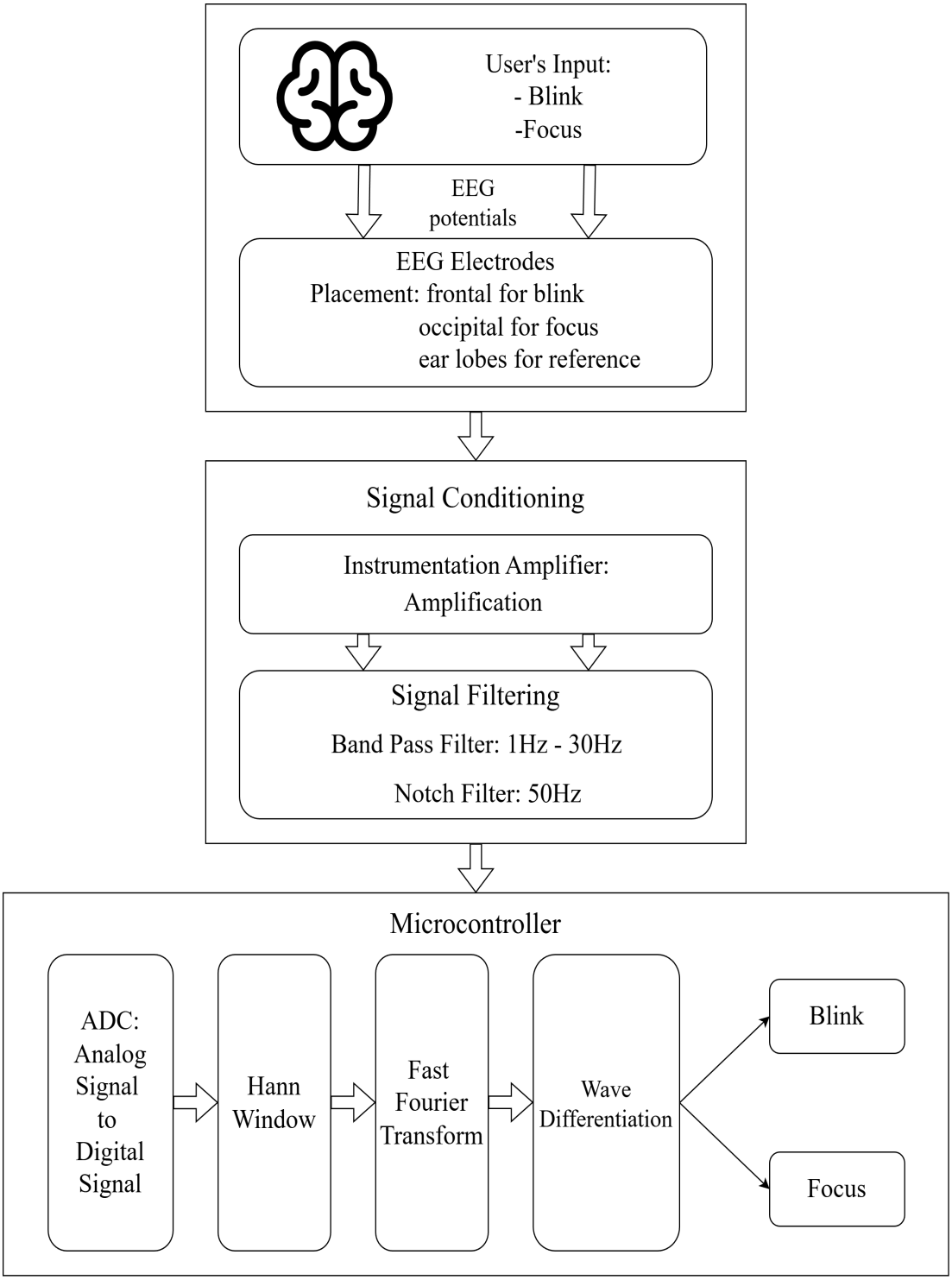

Figure 4-1. System Block Diagram of the Brain Computer Typing Interface

4.2. Description of Working Principle

The Brain Computer Interface (BCI) system detects, amplifies, filters, and interprets brain electrical activity to control external devices. Electrodes placed on the scalp capture EEG signals. The weak EEG signals are amplified using an Instrumentation Amplifier (AD620), which boosts the signal while rejecting noise. The amplified signals then pass through a Butterworth band pass filter, which isolates the desired frequency range and removes artifacts and muscle activity.

The filtered signals are converted to digital form using the Arduino's ADC ports. Software algorithms analyze the signal frequencies to determine which visual stimulus the user is focusing on, allowing control of external devices. This system effectively translates brain activity into commands with high sensitivity, low noise, and minimal interference.

More precisely, EEG electrodes are placed on the scalp at frontal and occipital regions to capture signals related to eye blinks and brain activity. A large voltage change appears in the EEG signal when the user performs an intentional eye blink. The proposed BCI typing system works by detecting eye blinks and changes in alpha wave activity from EEG signals to control a typing or selection interface but alpha wave activity varies depending on the user's level of focus or relaxation and is mainly observed in the occipital region of the brain.

The EEG signals collected from the electrodes are first amplified and conditioned using an analog front end circuit then these signals are passed through analog filters including high pass, low pass and notch filters, to remove unwanted noise, baseline drift and power line interference. Then the clean EEG signals are converted into digital form using an analog to digital converter.

In the digital stage, the system stores the sampled EEG data in short time windows. Eye blinks are detected directly from the time domain signal using amplitude thresholding techniques and based on predefined thresholds, the system determines whether the user is focused or relaxed. For alpha wave analysis, Fast Fourier Transform (FFT) is applied to the observed EEG data to calculate the power in the alpha frequency band (8–12 Hz). If blink and alpha states are detected then it is processed by a rule based decision logic, which translates them into typing or selection actions on the user interface.

4.3. Flowchart of Proposed System Architecture

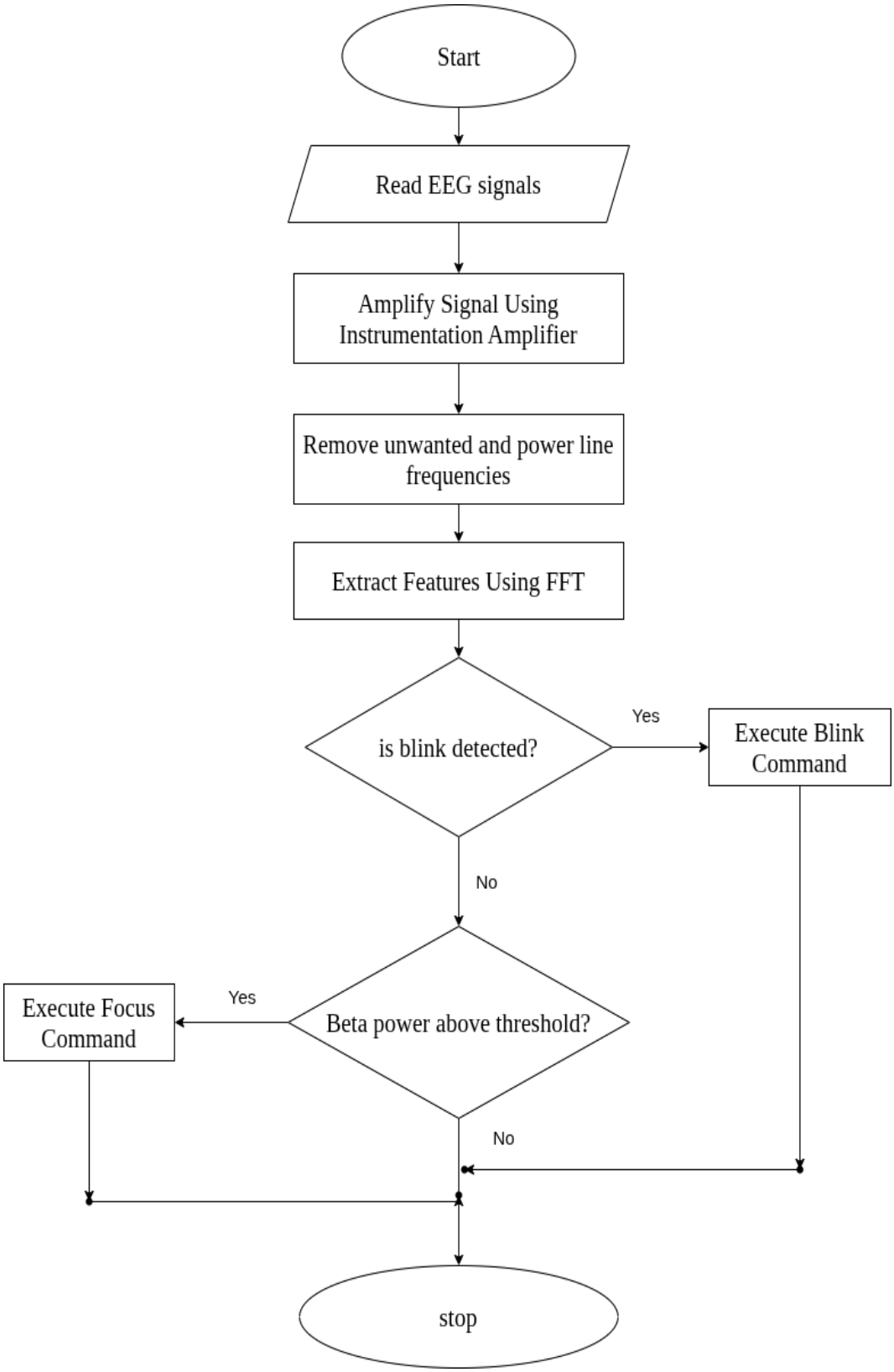

Figure 4-2. Flowchart of Proposed System Architecture

This flowchart illustrates the operation of the proposed EEG-based BCI system. The system acquires EEG signals, amplifies them using an instrumentation amplifier, and removes unwanted noise and power-line interference through filtering. FFT is then applied to extract relevant features. Based on these features, the system first checks for blink detection to execute a blink command; if no blink is detected, it evaluates beta-band power to determine focus and execute the corresponding focus command, after which the process ends.

4.4. EEG Electrode Placement and Signal Acquisition

The human brain consists of billions of neurons that communicate with each other using electrical impulses. When a group of neurons becomes active simultaneously such as during thinking, eye blinking, or movement small electrical potentials are generated due to ionic current flow across neuronal cell membranes. These electrical activities create voltage fluctuations that spread through the brain tissues, skull, and scalp.

EEG electrodes are conductive sensors placed on the scalp that detect these tiny voltage changes. They do not read signals from a single neuron; instead, they capture the combined electrical activity of thousands or millions of neurons located beneath the electrode. Since the skull has high resistance and attenuates the signal, the detected EEG voltages are very small, typically in the range of microvolts (μV).

Each EEG measurement is taken as a potential difference between two electrodes: an active (measuring) electrode and a reference electrode. A third electrode, called the ground electrode, is used to reduce noise and stabilize the signal. When brain activity changes, the voltage difference between the active and reference electrodes also changes, and this variation represents the EEG signal.

To ensure proper signal acquisition, electrodes are usually placed using conductive gel or saline solution to reduce skin electrode impedance. To capture the beta waves one electrode is placed in the Fpz position according to the 10-20 system and another electrode is placed at the A1 position which is the earlobe that is used as reference as there is little brain activity in the earlobes. The captured signal is then passed to an instrumentation amplifier, where it is amplified and prepared for filtering and further processing in the BCI system.

4.5. Instrumentation Amplifier (AD620) Design and Implementation

In our system, the AD620 instrumentation amplifier operates by amplifying the differential voltage between the scalp electrode and the reference electrode while rejecting common unwanted signals. The two input pins of the AD620 are connected to the active and reference EEG electrodes. These electrodes pick up both the desired brain signal and unwanted noise such as ac power outlet interference (50 Hz) and motion artifacts. Since most of this noise appears equally on both electrodes, it is classified as common mode noise.

Inside the AD620, the input stage consists of two matched input amplifiers with very high input impedance. This prevents current from being drawn from the electrodes, ensuring that the extremely weak EEG signals are not distorted or attenuated. These two input amplifiers amplify the incoming signals equally, preserving the small voltage difference generated by brain activity.

The core principle of the AD620 is differential amplification. The amplifier subtracts the voltage at one input from the other and then amplifies only this difference. As a result, signals that are common to both inputs such as 50 Hz power line noise are effectively cancelled due to the AD620's high Common Mode Rejection Ratio (CMRR), while the EEG signal is amplified.

The gain of the AD620 is set using a single resistor (Rg) connected between the inverting terminal. This resistor controls how much the tiny EEG voltage (typically in microvolts) is amplified to a level suitable for further processing. In our BCI project, the gain is chosen so that the EEG signal is amplified without saturation while still being large enough for filtering and ADC conversion.

AD620 achieves high common mode rejection by using matched resistors. It uses highly precise resistors which cannot be achieved by regular manufacturing processes. The resistors used here are precisely matched due to laser wafer trimming technique. The resistors used in input stage has resistance of 24.7 kΩ which results into the gain equation of

$$G = \frac{2x24.7\,\mathrm{k\Omega}}{R_g} + 1$$

$$G = \frac{49.4\,\mathrm{k\Omega}}{R_g} + 1 \tag{4-1}$$

$$R_g = \frac{49.4\,\mathrm{k\Omega}}{G - 1} \tag{4-2}$$

Finally, the amplified output signal from the AD620 is referenced to a stable reference ground voltage and sent to the next stage band pass filter and notch filter, before entering the microcontroller's ADC. In this way, the AD620 acts as the first and most critical signal conditioning stage, ensuring that clean, amplified EEG signals are available for reliable blink detection and FFT analysis.

4.6. Filter Design and Signal Conditioning

4.6.1. Bandpass filter

In our project, the band pass filter is used to isolate the useful EEG frequency components while removing unwanted low frequency drift and high frequency noise. After the EEG signal is amplified by the AD620 instrumentation amplifier, it still contains various undesired components such as DC offset, baseline drift, muscle noise (EMG), and high frequency electrical interference. The bandpass filter is therefore applied as the next signal conditioning stage.

The band pass filter operates by allowing only a specific range of frequencies to pass through while attenuating frequencies outside this range. In our project, the lower cutoff frequency is chosen to remove very low frequency components such as electrode drift and motion artifacts, while the upper cutoff frequency is selected to suppress high frequency noise such as muscle activity and electronic noise. As a result, only EEG related frequency components particularly those associated with eye blinks and brain activity are preserved.

Practically, the bandpass filter is implemented by cascading a highpass filter and a low pass filter. The high pass filter blocks DC and very slow variations, whereas the low pass filter blocks fast, unwanted fluctuations. Together, they ensure that the amplified EEG signal lies within a clean and controlled frequency band suitable for digitization. This filtered signal is then fed into the microcontroller's ADC for sampling.

We used a 6th order Butterworth band pass filter with a passband of 10–35 Hz to effectively isolate EEG components relevant to eye blink and intentional brain activity while suppressing noise. The 10 Hz lower cutoff removes low frequency artifacts such as baseline drift, electrode motion, and DC offset. The 35 Hz upper cutoff eliminates high frequency noise, including muscle (EMG) activity and electronic interference. A Butterworth filter is chosen because it provides a maximally flat response in the passband, preserving EEG signal shape. The 6th order ensures a steep roll off, giving better noise rejection and cleaner signals for accurate FFT analysis and blink detection.pass filter, the system ensures that the microcontroller processes only meaningful EEG data, improving the accuracy of eye blink detection and FFT based frequency analysis. This filtering

stage reduces computational load, prevents ADC saturation, and enhances the overall reliability of the BCI system.

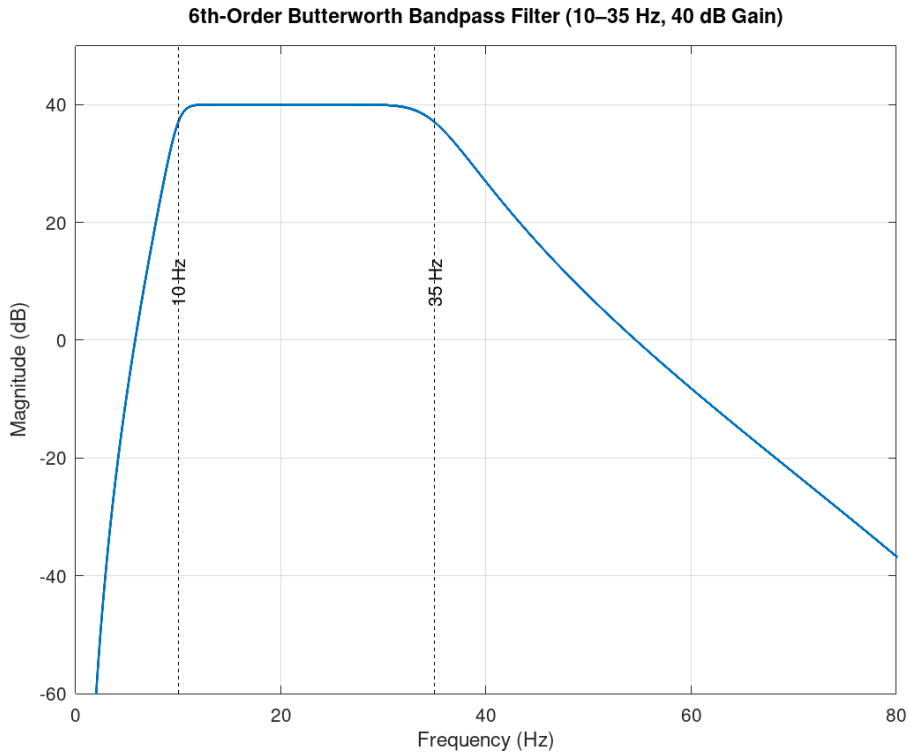

Figure 4-3. 6th-order Butterworth band pass filter's frequency response

4.6.2. Notch Filter

In our EEG based BCI project, a notch filter is used to remove power line interference, which appears as a strong sinusoidal noise at 50 Hz (in Nepal). This interference is picked up by the EEG electrodes due to electromagnetic coupling from nearby electrical equipment and wiring.

The notch filter is designed with a very narrow stopband centered at 50 Hz. It works by strongly attenuating signals at this specific frequency while allowing all other frequencies to pass with minimal effect. When the amplified EEG signal passes through the notch filter, the 50 Hz component is significantly reduced, while the useful EEG frequencies remain intact.

By eliminating power line noise, the notch filter improves signal clarity and prevents false peaks in FFT analysis, leading to more accurate eye blink detection and reliable BCI performance.

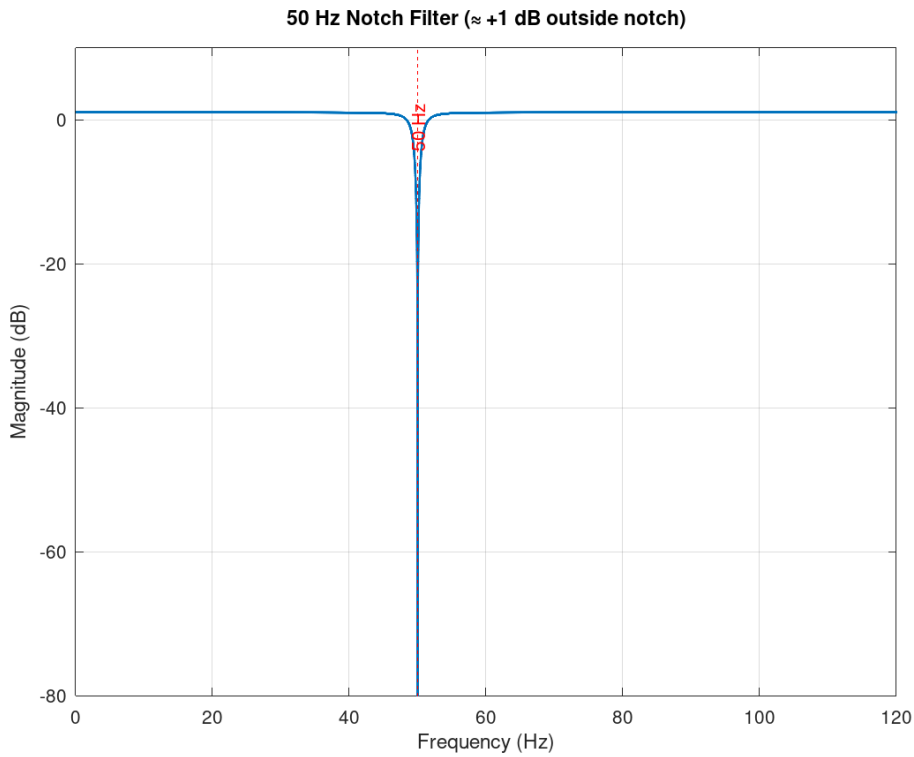

Figure 4-4. 50 Hz Notch Filter frequency response

4.7. Microcontroller Based Data Acquisition and Communication

The microcontroller based data acquisition stage is responsible for converting the conditioned analog EEG signal into a digital form suitable for realtime processing. After passing through the instrumentation amplifier and analog filtering stages, the EEG signal contains the frequency components of interest but remains a continuous time voltage. This signal is then applied to the microcontroller's built in analog to digital converter (ADC), which samples the signal at uniform time intervals and converts it into a sequence of digital values. Prior to digitization, the signal is level shifted to a mid supply reference voltage to ensure compatibility with the single supply ADC input range and to prevent clipping of negative voltage components.

4.7.1. Analog to Digital Converter (ADC)

After the EEG signal is amplified and filtered, it is still an analog signal, meaning it is a continuous voltage that varies with time. However, our microcontroller and signal processing algorithms (like FFT) can only work with digital data. Therefore, the signal must be converted from analog to digital, which is done using an Analog to Digital Converter (ADC).

The filtered EEG signal (in microvolts, now amplified to millivolts/volts) is fed to the ADC input of the microcontroller. The ADC samples the EEG signal at a fixed sampling frequency (e.g., 250 Hz or 500 Hz), which is sufficient to capture EEG frequencies (0.5 – 40 Hz). Instead of a continuous waveform, we now have discrete time voltage values.

The ADC used by our microcontroller is Successive Approximation ADC. SAR ADC is a type of analog to digital converter that converges digital value towards input signal after every iteration by binary search. Here the search is done by comparing the current digital value in register with input value via DAC and makes a decision to step up or step down the digital value depending on the result of comparision. The digital value is updated from most significant bit to least significant bit.

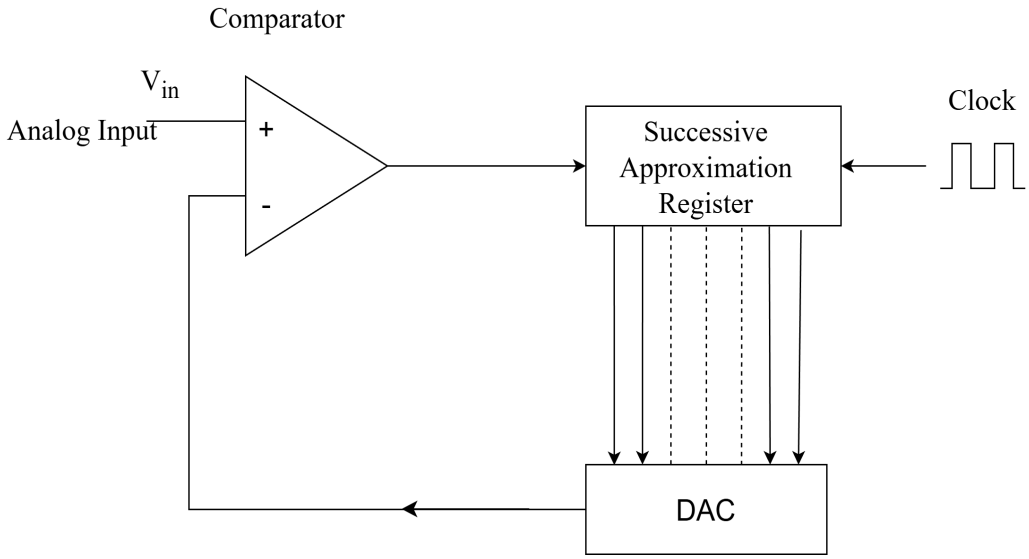

Figure 4-5. Flowchart of Proposed System Architecture

4.8. Arduino Timer Specifications

Arduino boards, such as the Arduino Uno, feature built-in hardware timers that provide precise time measurement, event counting, and pulse generation. The key specifications of these timers are as follows:

- **Timer Types:**
  - 8-bit timers: Timer0, Timer2
  - 16-bit timer: Timer1
- **Modes of Operation:**
  - Normal mode (simple counting)
  - CTC (Clear Timer on Compare Match) mode

  - PWM (Pulse Width Modulation) modes
- **Clock Source:** Each timer increments based on the system clock (16 MHz on Arduino Uno), optionally divided by a configurable prescaler (1, 8, 64, 256, 1024), allowing flexible timing intervals.
- **Interrupt Capabilities:** Timers can generate interrupts on compare match, overflow, or external events, enabling precise periodic execution of code.
- **Resolution:**
  - 8-bit timers: counts from 0 to 255
  - 16-bit timer: counts from 0 to 65535
- **Applications:**
  - Generating precise delays and periodic signals
  - Measuring time intervals
  - Counting external pulses or events
  - Producing PWM signals for motor and LED control

These timers act as hardware counters, providing high accuracy and reliability for time sensitive tasks without relying on software delays.

4.9. Frequency Domain Analysis Using Fast Fourier Transform (FFT)

The digital data is now ready for processing. But the signal is in time domain i.e the signal shows voltage vs time. Brain rhythms (alpha, beta, etc.) are hidden inside the signal. So, the problem is, from the time domain signal alone, we cannot clearly separate brain waves by frequency. For that we need to convert the EEG signals from time domain to frequency domain. And a fourier transform allows us to do that.

$$F(\omega) = \int_{-\infty}^{\infty} x(t)\, e^{-j\omega t}\, dt$$

where:
x(t): The original function or signal in the time domain.
$F(\omega)$: The transformed function in the frequency domain.
ω: Angular frequency.
$e^{-j\omega t}$: A complex exponent representing sinusoidal components.

4.10. Discrete Fourier Transform (DFT) and Fast Fourier Transform (FFT)

The sampled data is discrete, not continuous. And that is why we use discrete fourier transform since the regular fourier transform is for continuous signals. The Discrete Fourier Transform (DFT) is used to convert our discrete time signal from the time

domain into its frequency domain representation. It directly computes the frequency components using the DFT formula and requires a large number of computations. For an N point signal, DFT requires $O(N^2)$ complex multiplications, which makes it computationally slow for large data sets.
The DFT of x[n] is mathematically defined as

$$X[k] = \sum_{n=0}^{N-1} x[n]\ e^{-j\frac{2\pi kn}{N}}, \quad k = 0, 1, 2, \ldots, N-1 \tag{4-3}$$

where,
k: index for output frequency component
X[k]: the complex frequency domain coefficient corresponding to the k-th frequency
N: total number of samples
n: the index for sample ranging from 0 to N-1 x[n]: n-th sample

The Fast Fourier Transform (FFT) is not a different transform but an efficient algorithm used to compute the Discrete Fourier Transform (DFT). FFT exploits the symmetry and periodicity properties of the DFT to reduce the number of calculations. Using FFT, the computational complexity is reduced from $O(N^2)$ to $O(N \log N)$, making it much faster and suitable for real-time signal processing applications such as EEG, ECG, image processing, and communication systems.

FFT computes frequency components efficiently with a computational complexity of $O(N \log N)$, making it suitable for real-time EEG processing. The magnitude of the FFT output, $|X[k]|$ or the power spectrum $|X[k]|^2$, indicates the strength of each frequency component present in the EEG signal. By analyzing the power distribution across frequency bands such as the alpha frequency band (8–13 Hz), the presence and intensity of specific brain rhythms can be identified. Thus, FFT transforms the time-domain EEG signal into a frequency-domain representation, enabling reliable detection and analysis of brain activity patterns that are essential for EEG-based signal processing.

4.11. Windowing – Hann Window

When performing a Fourier transform, the signal taken for sampling is finite, with no guarantee of perfect start and end points of the waveform, which causes inaccuracies in frequency analysis. Due to this, spectral energy from high-energy frequencies spreads into neighboring frequencies. This phenomenon is known as spectral leakage.

Although spectral leakage cannot be completely eliminated, it can be reduced using windowing techniques. Windowing reduces spectral leakage by smoothing the signal at its boundaries before transforming it from the time domain to the frequency domain.

In this project, the Hann window is used to reduce spectral leakage before transforming the EEG signal. The Hann window smooths abrupt signal transitions by gradually reducing the signal amplitude to zero at the edges, making it suitable for EEG frequency analysis. The Hann window is defined as:

$$w(n) = \frac{1}{2}\left(1 - \cos\left(\frac{2\pi n}{N-1}\right)\right), \quad n = 0, 1, 2, \ldots, N-1$$

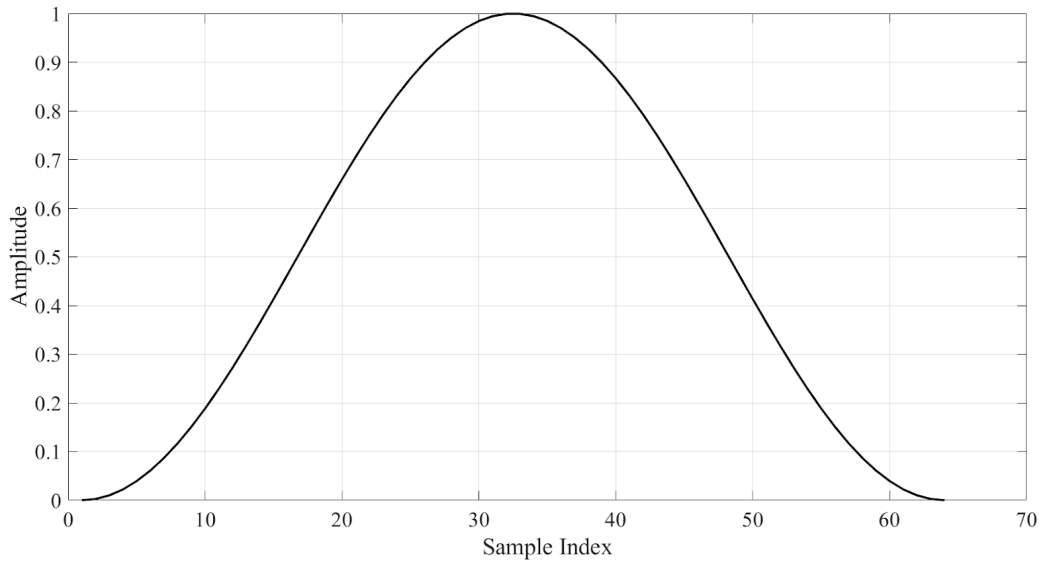

Figure 4-6. Hann Window

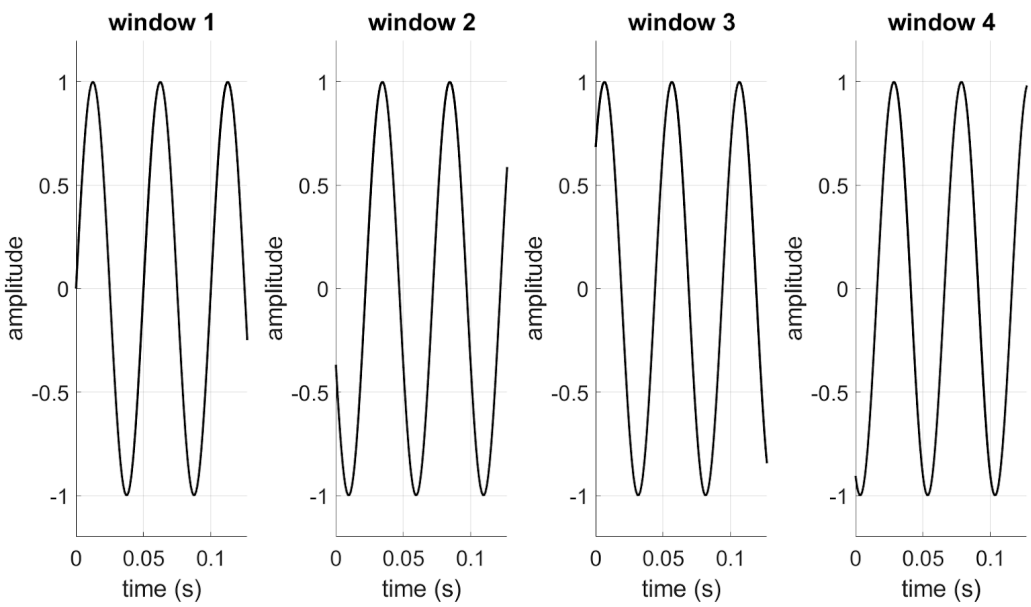

Figure 4-7. Discontinuous wave during window transition

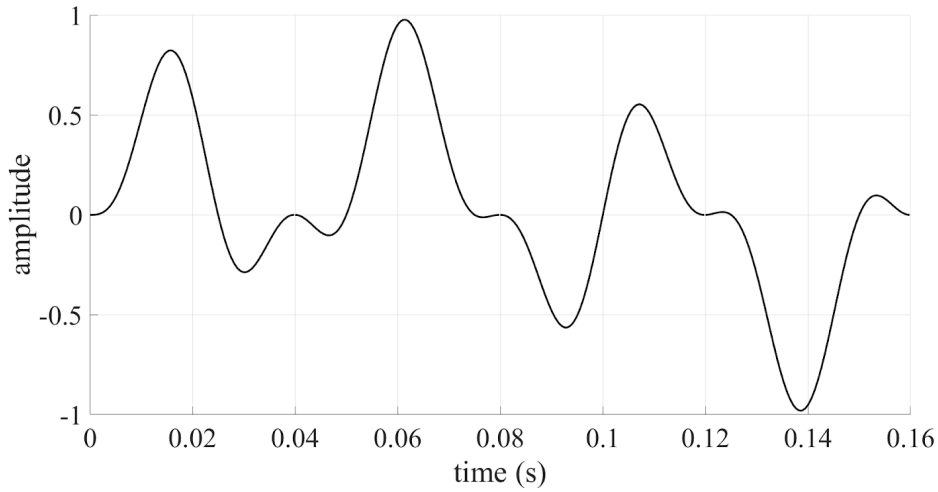

Figure 4-8. Continuity due to Hann window application on 4-7

4.12. Processing After Fast Fourier Transform (FFT)

After applying the Fast Fourier Transform, the digitized EEG signal is converted from the time domain into the frequency domain. The FFT output provides information about the distribution of signal power across different frequency components. The magnitude of each frequency bin is calculated from the real and imaginary parts of the FFT output, representing the strength of EEG activity at corresponding frequencies.

Relevant frequency-domain features are extracted by analyzing power within predefined frequency bands. Eye blink activity is characterized by low-frequency, high-amplitude components, whereas focused mental states show increased power in higher frequency bands, particularly the beta band (approximately 13–30 Hz). The system computes band-wise power values, which serve as features for classification.

These extracted features are compared with predefined threshold values within the microcontroller. If the blink-related frequency power exceeds the blink threshold, the system identifies the signal as a blink. Similarly, if the focus-related frequency power exceeds the focus threshold, the system detects a focused state. Based on this decision, appropriate control actions are generated: a blink command is used to traverse between keys, while a focus command is used to select the desired key.

5. EXPECTED OUTCOME

The expected outcome of this project is the successful development of a basic EEG-based brain–computer interface (BCI) typing or text selection system using eye blink detection and alpha wave analysis. The system is expected to reliably acquire EEG signals using low-cost electrodes and analog filtering circuits. Eye blinks should be clearly detected as intentional control events, while alpha wave activity should be measurable using FFT-based spectral analysis.

The system is expected to operate in near real-time with minimal latency between EEG signal acquisition and user response. Proper use of band-pass and notch filters should significantly reduce noise, motion artifacts, and power-line interference, thereby improving overall signal quality. The eye blink detection mechanism should demonstrate acceptable accuracy and reliability with minimal false triggering, ensuring stable and consistent system performance.

This project aims to demonstrate simple signal processing techniques and threshold-based decision logic to control a typing interface without reliance on complex machine learning or advanced classification methods. In addition, the project provides practical experience in EEG signal acquisition, analog filtering, digital signal processing, and system integration. Overall, the system serves as a functional proof of concept for low-cost BCI applications and fulfills educational objectives.

6. IMPLEMENTATION DETAILS

6.1. Hardware Components and Their Functioning

6.1.1. EEG Electrodes

EEG electrodes work on the principle of biopotential sensing. When neurons in the brain communicate, they generate tiny electrical potentials due to ionic movement across neuronal membranes. These potentials propagate through brain tissue, skull, and scalp, where they can be detected as voltage differences.

In this project, electrodes are placed on the scalp according to the international 10–20 system, ensuring consistent and repeatable measurements. A differential measurement technique is used, where the voltage difference between an active electrode and a reference electrode is measured. A ground electrode is also used to stabilize the signal and reduce noise.

Eye blinks produce strong electrical artifacts due to eye movement and muscle activity around the eyes. These appear as high amplitude, low frequency signals, making them easily detectable in EEG recordings.

6.1.2. Instrumentation Amplifier (AD620)

The AD620 is a precision instrumentation amplifier specifically designed for low level biomedical signals. Since EEG signals are extremely weak, direct processing is not possible without amplification.

The AD620 works by amplifying only the difference between two input signals, while rejecting signals common to both inputs (common mode noise), critical for rejecting noise from power lines, body movement, and the environment. The gain of the AD620 is set using a single external resistor, allowing precise control of amplification. This ensures that EEG signals are amplified to a level suitable for further processing without distortion.

6.1.3. Analog Signal Conditioning Using Band Pass Filter

In this project, analog signal conditioning is achieved using a band pass filter circuit, which performs the combined functions of high pass filtering, low pass filtering, and suppression of power line interference. Instead of using separate filter stages, a single band pass filter is designed to allow only the EEG frequency range of interest to pass while rejecting unwanted components. The band pass filter ensures that the acquired EEG signal is properly conditioned before analog to digital conversion, thereby improving signal quality and reliability.

The lower cutoff frequency of the band pass filter is designed to block DC offset and very low frequency components caused by electrode polarization, slow head movements, and baseline drift. These components do not carry useful EEG information and can reduce the effectiveness of amplification and digitization if not removed.

The upper cutoff frequency of the band pass filter limits high frequency noise, including electromyographic (EMG) signals generated by facial and scalp muscles, as well as external electromagnetic interference. Since EEG signals of interest mainly lie below 40 Hz, restricting the upper frequency range helps isolate relevant brain activity.

In addition, the band pass filter is designed such that power line interference at 50 Hz is significantly attenuated. By sharply reducing signal components around this frequency, the filter minimizes the effect of electrical noise from mains power supply without affecting the useful EEG frequency bands.

6.1.4. Arduino Microcontroller (ADC & Control Unit)

The Arduino acts as the digital interface between the analog EEG hardware and the computer. It contains a built in Analog to Digital Converter (ADC) that converts the conditioned analog signal into digital data.

The ADC samples the input voltage at regular intervals and converts it into a numerical value based on the reference voltage and ADC resolution (typically 10-bit). This digital representation allows software based signal processing. After digitization, the Arduino transmits the data to the computer using USB serial communication, which internally follows the UART protocol.

6.1.5. Timer1 - Arduino

In this project, Timer1 (a 16-bit timer) is configured in CTC mode to generate interrupts at a rate of 1024 Hz. This allows the Arduino to read analog samples from pin A0 at precise intervals. The configuration details are:

- **Timer:** Timer1 (16-bit)
- **Mode:** CTC (Clear Timer on Compare Match)
- **Prescaler:** 1
- **Compare Register (OCR1A):** 15624
- **Interrupt Frequency:**

$$f_{\text{interrupt}} = \frac{f_{\text{CPU}}}{(OCR1A + 1) \times \text{Prescaler}} = \frac{16\,\text{MHz}}{15625 \times 1} \approx 1024\ \text{Hz}$$

The corresponding ISR reads the analog input and stores it in a double buffer for further processing:

6.1.6. Interconnection of Hardware Components

All hardware components are interconnected to form a complete EEG based BCI system. EEG electrodes capture brain signals and eye blink activity, which are amplified using the AD620 instrumentation amplifier. The amplified signals are passed through bandpass and notch filters to remove noise and isolate relevant EEG frequency bands.

The conditioned signal is then digitized by the Arduino microcontroller using its ADC. The digital data is transmitted to MATLAB via serial communication. MATLAB processes the signal using FFT and time domain analysis to detect eye blinks and brain wave activity. Based on predefined thresholds and rule based logic, control commands are generated and mapped to a simple text entry interface.

This integrated hardware–software system demonstrates a low cost, efficient, and educational implementation of a Brain Computer Interface.

6.2. Software Components and Their Functioning

6.2.1. Arduino Firmware

The Arduino firmware acts as the data acquisition and communication layer of the system. Its primary role is to continuously read the conditioned EEG signal from the analog input pin using the built in Analog to Digital Converter (ADC) and transmit this data to the computer for further processing.

The ADC of the Arduino converts the incoming analog EEG signal into a digital value based on its reference voltage and resolution. In this project, the EEG signal after amplification and filtering lies within the safe input voltage range of the Arduino ADC. The firmware is programmed to sample the signal at a fixed and consistent sampling frequency, which is essential for accurate frequency domain analysis using FFT in MATLAB.

A timing mechanism (delay or timer based loop) is implemented in the firmware to ensure uniform sampling intervals. Each sampled data point is immediately sent to the computer via USB serial communication, which internally uses the UART protocol. The serial baud rate is carefully selected to allow smooth real time transmission without data loss.

The firmware does not perform complex signal processing. Instead, it focuses on reliable data acquisition and real time streaming, keeping the hardware simple and ensuring that all advanced processing is handled by MATLAB. Functions in the Project:

- Read analog EEG signal using Arduino ADC
- Maintain constant sampling frequency
- Convert analog voltage into digital values
- Transmit EEG data continuously to MATLAB via USB serial link

6.2.2. MATPLOTLIB

Python serves as the signal processing, analysis, and visualization platform of the project. It receives real time EEG data streamed from the Arduino through the serial interface and processes it using digital signal processing techniques implemented in Python. Libraries such as NumPy, SciPy, and Matplotlib are used for numerical computation, frequency analysis, and graphical visualization respectively.

Initially, the received EEG samples are plotted in the time domain using Matplotlib to observe the raw signal behavior. Eye blink events appear as high amplitude peaks in the time domain waveform, making them clearly distinguishable from normal EEG activity. The Python program continuously monitors the signal amplitude and applies threshold based logic to detect these eye blink events in real time.

For brain wave analysis, the EEG signal is divided into short time windows of fixed length. Before applying the Fast Fourier Transform (FFT), a Hann window is applied to each segment to minimize spectral leakage and improve frequency resolution. The FFT is then computed using NumPy/SciPy functions to convert the EEG signal from the time domain to the frequency domain, enabling detailed frequency band analysis.

In this project, particular emphasis is placed on the alpha frequency band (8–12 Hz). The Python program calculates the spectral power within this band and compares it with predefined threshold values to estimate the user's mental state, such as relaxed or focused condition.

Based on the extracted features, eye blink detection is used as a control or selection mechanism, while alpha wave dominance acts as a decision parameter. A rule based decision logic combines these detections to generate control commands for the text entry or selection interface. The processed results and signal plots are displayed using Matplotlib, demonstrating a hands free human computer interaction system driven by brain signals.

6.3. Calibration Process of Each Module

6.3.1. EEG Electrode Calibration

- Proper skin preparation is done to reduce electrode skin impedance
- Electrodes are placed firmly to ensure stable contact
- Baseline EEG signals are recorded to verify signal presence

6.3.2. Amplifier Calibration

- Gain of the AD620 is set using an external resistor
- Output is tested using known low amplitude signals
- Offset voltage is checked to avoid signal saturation

6.3.3. Filter Calibration

- Cutoff frequencies of high pass and low pass filters are verified
- Notch filter is tuned precisely at 50 Hz
- Frequency response is tested using signal generators

6.3.4. ADC Calibration

- Arduino ADC reference voltage is verified
- Signal range is adjusted to prevent clipping
- Sampling frequency is tested for accurate FFT analysis

6.4. Interfacing Technicalities and Protocols

6.4.1. EEG Electrodes to Amplifier Interface

The interfacing between EEG electrodes and the instrumentation amplifier is carried out using a differential connection method. In this configuration, two active electrodes are used to measure the voltage difference generated by brain activity, while a reference electrode provides a stable comparison point. A separate ground electrode is connected to the subject to stabilize the overall system potential and reduce electrical noise. Differential measurement is essential in EEG acquisition because the signals are extremely low in amplitude and highly susceptible to external interference.

To further minimize noise pickup, shielded cables are used to connect the electrodes to the amplifier inputs. These cables reduce electromagnetic interference from surrounding electrical devices and power lines. Proper skin preparation and firm electrode placement ensure low electrode–skin impedance, which improves signal quality and prevents signal

distortion. This careful interfacing allows the amplifier to accurately capture genuine EEG signals and eye blink artifacts while rejecting unwanted noise.

6.4.2. Amplifier to Filter Circuit Interface

The output of the AD620 instrumentation amplifier is directly connected to the input of the analog filter circuit. At this stage, signal level matching is crucial to ensure that the amplified EEG signal remains within the operational limits of the filter components. The amplifier gain is carefully adjusted so that the signal amplitude is sufficiently large for effective filtering but does not cause saturation of the filter stages.

Proper grounding practices are followed to avoid ground loops, which can introduce additional noise and instability. The amplifier and filter circuits share a common ground reference to maintain signal integrity. By directly interfacing the amplifier output to the filter input, the system ensures continuous and smooth signal flow, allowing unwanted frequency components to be removed effectively before digital conversion.

6.4.3. Filter to Arduino Interface

After analog signal conditioning, the filtered EEG signal is interfaced with the Arduino microcontroller through one of its analog input (ADC) pins. Since the Arduino ADC can only accept input voltages within the range of 0 to 5 volts, the filter output is carefully designed and biased to remain within this limit. This prevents signal clipping and protects the microcontroller from overvoltage damage.

The filtered signal represents the cleaned EEG waveform, containing relevant brain activity and eye blink information. This signal is fed directly into the ADC pin, where it is sampled at regular intervals. A common ground connection between the filter circuit and the Arduino is maintained to ensure accurate voltage measurement and reliable analog to digital conversion.

6.4.4. Fast Fourier Transform

This algorithm is used in arduino to know the frequency composition of received signal. And following is the algorithm/pseudocode for it.

Algorithm 1 Cooley-Tukey FFT

Require: $x[0..N-1]$: sequence of sample, N a power of 2
Ensure: $X[0..N-1]$: discrete Fourier transform of x

```
if N = 1 then
    X[0] ← x[0]
else
    x_even ← x[0], x[2], ..., x[N − 2]
    x_odd ← x[1], x[3], ..., x[N − 1]
    X_even ← FFT(x_even)
    X_odd ← FFT(x_odd)
    for k = 0 to N/2 − 1 do
        t ← X_odd[k] · e^(−2πik/N)
        X[k] ← X_even[k] + t
        X[k + N/2] ← X_even[k] − t
    end for
end if
return X
```

Bit Reversal

The bit reversal technique is a preprocessing step used in the Cooley-Tukey Fast Fourier Transform (FFT) to enable in place computation and reduce memory usage. In the FFT, the input sequence is recursively divided into even and odd indexed elements. This recursion can consume extra memory due to multiple temporary arrays.

We can reorder the sample sequence to perform the computation with low memory cost using bit reversal by reversing bits. For our use 1 byte memory is more than enough for bit reversal so we have put in pre defined array as 64 sized array is enough for this computation. After reordering, the FFT algorithm can operate iteratively and in place, eliminating the need for recursive subarrays. This reduces memory overhead, improves cache efficiency, and allows the FFT to maintain its computational complexity of $N \log N$.

Table 6-1. Bit-reversal permutation for $N = 8$ FFT

Original Index	Binary	Reversed Binary	Bit-Reversed
0	000	000	0
1	001	100	4
2	010	010	2
3	011	110	6
4	100	001	1
5	101	101	5
6	110	011	3
7	111	111	7

6.4.5. Arduino to MATLAB Communication Interface

Communication between the Arduino and MATLAB is established using USB based serial communication, which internally follows the standard UART (Universal Asynchronous Receiver Transmitter) protocol. The Arduino transmits digitized EEG samples as serial data packets to the computer in real time.

A suitable baud rate is selected to balance data transmission speed and reliability, ensuring that continuous EEG data can be transferred without loss or corruption. MATLAB opens a serial port to receive this data stream, synchronizes with the Arduino, and processes incoming samples in real time. This interfacing approach provides a simple yet robust method for transferring EEG data from hardware to software, enabling effective signal visualization and analysis.

7. RESULTS AND ANALYSIS

This section presents the results obtained from the implementation and testing of the proposed EEG based Brain Computer Interface system. Due to limitations in hardware availability and time constraints, the system was tested using simulated EEG signals generated through a function generator. The results demonstrate the feasibility of signal acquisition, filtering, and frequency domain analysis using FFT.

7.1. EEG Signal Acquisition Result

Low-amplitude signals in the microvolt range were applied at the input of the instrumentation amplifier to simulate EEG signals. The AD620 based instrumentation amplifier successfully amplified the input signal without significant distortion. The amplified signal was observed to be stable and suitable for further processing through the filtering stages. The result confirms that the amplification stage is capable of handling low-level biopotential signals, which is essential for EEG signal acquisition.

7.2. Filtered Signal Analysis

The amplified signal was passed through a high pass filter with a cutoff frequency of 0.5 Hz and a low-pass filter with a cutoff frequency of 40 Hz. The high-pass filter effectively removed DC offset and baseline drift, while the low-pass filter suppressed high frequency noise.

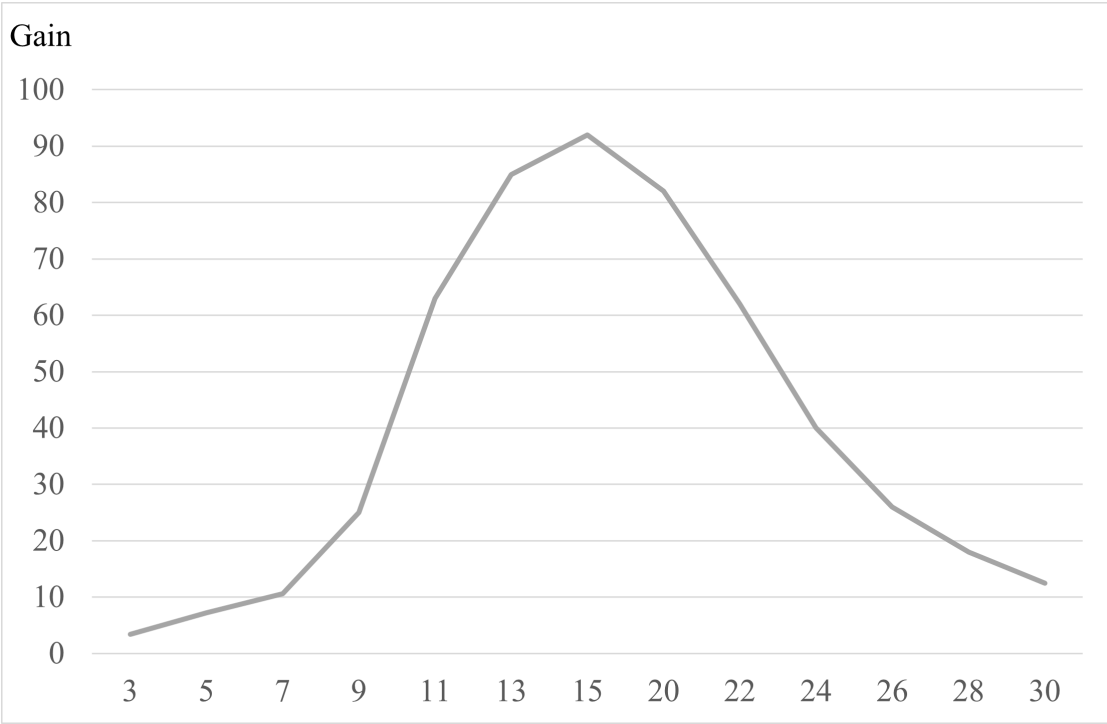

Figure 7-1. Frequency Response of Circuit

Table 7-1. Frequency Response Data

Fin	Vout	Gain
3	0.136	3.4
5	0.288	7.2
7	0.424	10.6
9	1	25
11	2.52	63
13	3.4	85
15	3.68	92
20	3.28	82
22	2.48	62
24	1.6	40
26	1.04	26
28	0.72	18
30	0.50	12.5

50 Hz notch filter was applied to reduce power line interference. The filtered signal showed significant reduction in noise components, resulting in a cleaner waveform suitable for frequency analysis.

7.3. Frequency Domain Analysis Using FFT

Fast Fourier Transform (FFT) was applied to the filtered signal to convert it from the time domain to the frequency domain. The FFT output clearly displayed dominant frequency components corresponding to the input signal from the function generator.

When the input signal frequency was set within the alpha band range (8–12 Hz), a noticeable peak was observed in the FFT spectrum within this frequency range. This confirms that the system is capable of identifying specific EEG frequency bands using frequency domain analysis.

7.4. Alpha Band Detection Result

The results showed that when the simulated signal frequency fell within the alpha range, the system successfully detected increased alpha band power. This demonstrates the feasibility of using alpha wave activity as a control parameter for the BCI system.

7.5. System Limitation and Current Status

At the current stage, real-time EEG data acquisition using electrodes and eye blink detection has not been fully implemented. The system primarily validates the signal processing chain, including amplification, filtering, and FFT based frequency analysis.

Despite these limitations, the obtained results verify the correctness of the circuit design and signal processing approach. The outcomes provide a strong foundation for further development and real-time implementation.

7.6. Discussion

The results obtained from simulated EEG signals indicate that the proposed system can effectively process low level signals and extract relevant frequency information. The FFT based analysis method proved to be reliable for identifying alpha band activity.

Although the system has not yet been tested with real EEG data, the observed results confirm the feasibility of the proposed design. Future implementation using actual EEG electrodes and real time processing is expected to improve the system's accuracy and practical applicability.

8. REMAINING TASKS

Although the proposed system demonstrates the basic working principle of an EEG based Brain Computer Interface, some tasks remain to be completed to make the system fully functional and reliable. These tasks are described below.

8.1. Dual Rail Power Supply / Rail Splitting Circuit Design

The current implementation uses a single supply voltage for circuit testing. However, the analog front end components, especially the AD620 instrumentation amplifier and active filters, require a dual rail power supply for optimal performance.

A dual rail power supply or rail splitting circuit needs to be designed to generate both positive and negative supply voltages from a single DC source. This will help in proper amplification of low level EEG signals, reduce signal distortion, and improve the overall signal quality.

8.2. Real Time Eye Blink Detection Using EEG Electrodes

At present, the system detects user focus by analyzing signals generated from a function generator, which does not represent real EEG data. Eye blink detection using actual EEG electrodes has not yet been implemented.

As a remaining task, EEG electrodes will be used to acquire real time signals from the scalp, and eye blinks will be detected based on high amplitude artifacts present in the EEG signal. Threshold based detection methods will be implemented to accurately distinguish eye blinks from normal EEG activity, enabling real time user command selection.

8.3. Keyboard Interface Development Using Matplotlib

Currently, the system does not include a complete graphical keyboard interface for text entry. A virtual keyboard interface needs to be developed using Python and Matplotlib to allow alphabet selection and traversal.

The keyboard interface will use the output of FFT based frequency analysis to determine the user's mental state. Alpha wave activity will be used for traversal across alphabets, while eye blink detection will be used for selection. This interface will enable hands free text entry through EEG signals and complete the intended functionality of the BCI system.

A. APPENDICES

A.1. Project Schedule

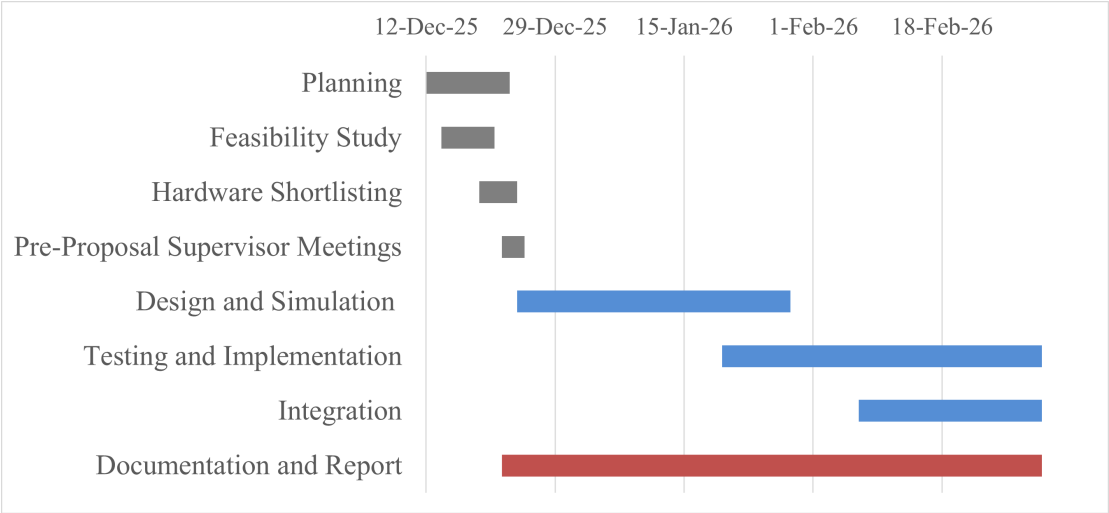

Figure A-1. Project Gantt Chart

A.2. Budget Estimation

Table A-1. Bill of Materials for EEG Acquisition Module

Component	**Qty**	**Unit Cost**	**Total Cost**
Arduino Uno	1	1000	1000
AD620 Instrumentation Amplifier Module	1	700	700
LM741 Op-Amp IC	3	40	120
10 nF Capacitors	5	10	50
22 nF Capacitors	5	10	50
47 nF Capacitors	5	10	50
100 nF Capacitors	5	10	50
Resistor Box (Bundle of Resistors)	1	175	175
Gold Cup EEG Electrodes	2	700	1400
12 V Power Supply	1	200	200
Miscellaneous*			1000
		Total	**4795**

A.3. Circuit Diagram

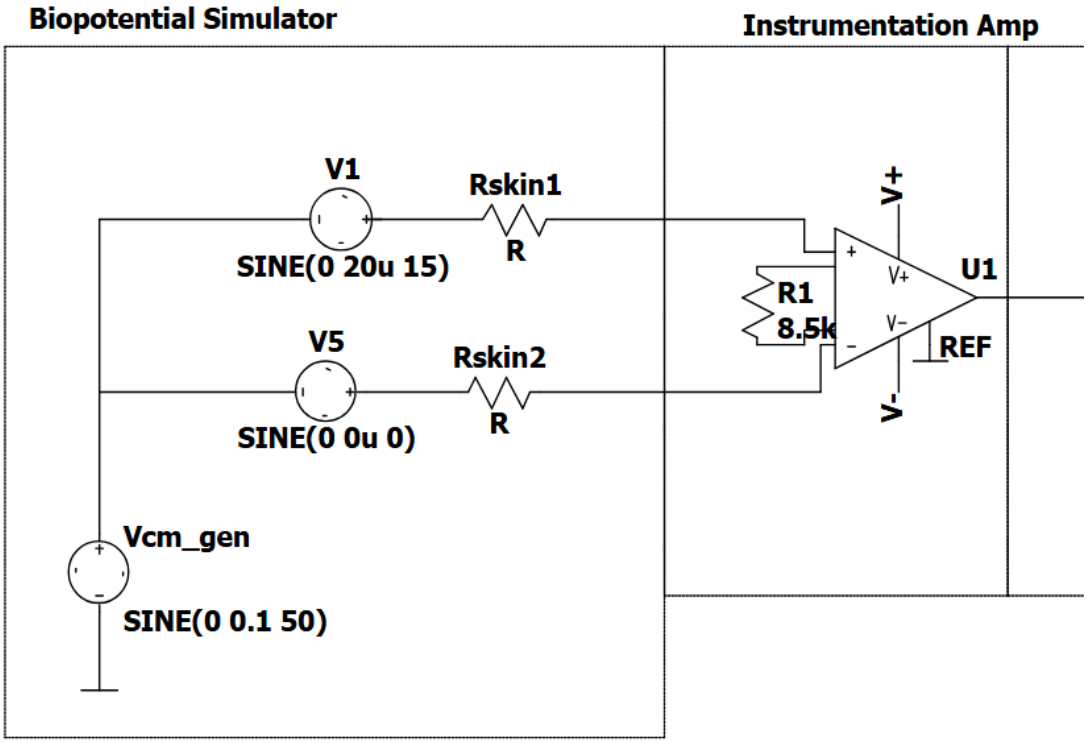

Figure A-2. AD620 (Instrumentation Amplifier)

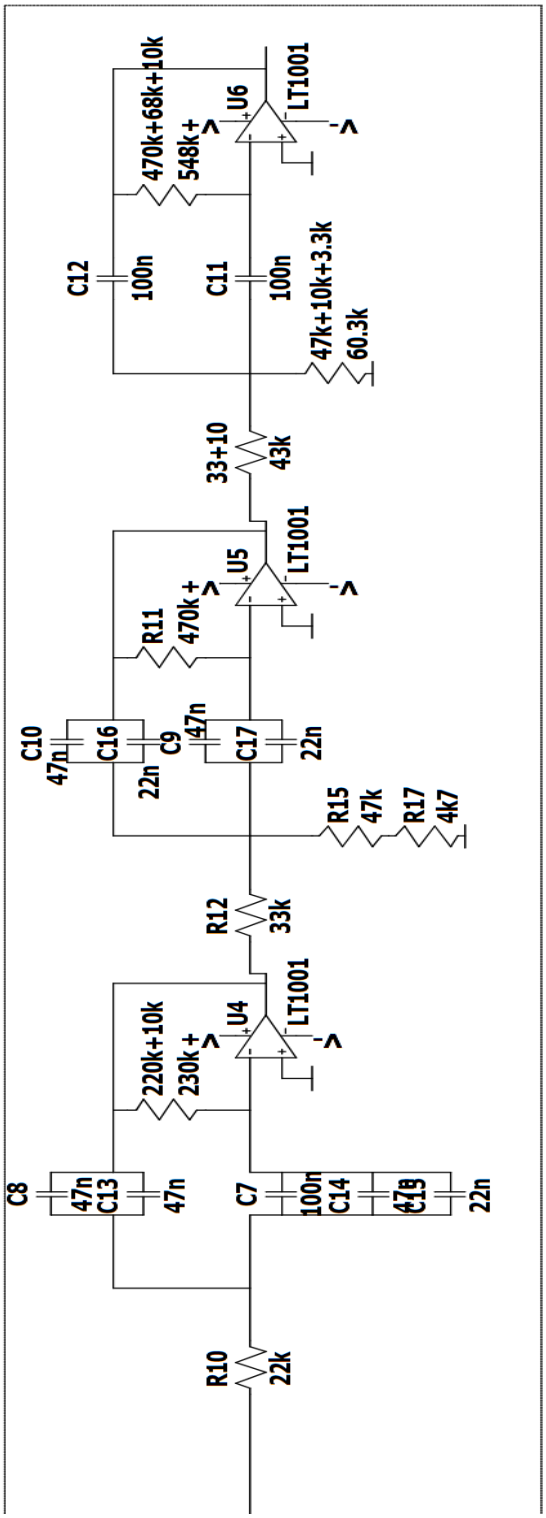

Figure A-3. 6th order butterworth filter using lm741

A.4. Module Specifications

A.4.1. EEG Signal Acquisition Module

Table A-2. EEG Signal Acquisition Module

Parameter	Specification
Signal Type	Electroencephalogram (EEG)
Number of Electrodes	3 (Fp1, Fp2, Reference)
Electrode Type	Ag/AgCl Surface Electrodes
Input Signal Amplitude	10 µV - 100 µV
Frequency	0.5Hz - 40Hz
Mode of Acquisition	Non invasive

A.4.2. Instrumentation Amplifier Module (AD620)

Table A-3. Instrumentation Amplifier Module (AD620)

Parameter	Specification
IC Used	AD620
Input Impedance	$\geq 10\,\mathrm{G\Omega}$
CMRR	> 100 dB
Gain Equation	$G = 1 + \frac{49.4\ \mathrm{k\Omega}}{R_g}$
Supply Voltage	±9 V
Application	Low-level biopotential amplification

A.4.3. Signal Conditioning Module (Filters)

Table A-4. Signal Conditioning Module (Filters)

Filter Type	Specification
High-Pass Filter	Cut-off frequency = 10 Hz
Low-Pass Filter	Cut-off frequency = 40 Hz
Notch Filter	Center frequency = 50 Hz
Filter Order	Second order
Purpose	Noise and artifact removal

A.4.4. Data Acquisition and Processing Module Specifications

Table A-5. Data Acquisition and Processing Module Specifications

Parameter	**Specification**
Microcontroller	Arduino Uno
ADC Resolution	10-bit
Sampling Frequency	256 Hz - 1024 Hz
Input Voltage Range	0 – 5 V
Communication	USB Serial

A.4.5. EEG Signal Processing Module Specifications

Table A-6. EEG Signal Processing Module Specifications

Parameter	**Specification**
Programming Language	MATLAB
Signal Processing	FFT based frequency analysis
EEG Bands Analyzed	Beta Waves (10-30 Hz)
Blink Detection	Amplitude threshold based
Output	Text selection control

A.5. Code Snippets:

FFT

```
void fft(float *real, float *imag){
    bitReversalPermutation(real, imag);

    for (uint8_t stage = 1; stage <= 7; stage++){
        uint8_t m = 1 << stage;
        uint8_t m2 = m >> 1;

        float theta = -2.0 * PI / m;
        float wm_real = fastCos(theta);
        float wm_imag = fastSin(theta);

        for (uint8_t k = 0; k < N; k += m){
            float w_real = 1.0;
            float w_imag = 0.0;

            for (uint8_t j = 0; j < m2; j++){
                uint8_t t = k + j + m2;
                uint8_t u = k + j;

                float tr = w_real * real[t] - w_imag * imag[t];
                float ti = w_real * imag[t] + w_imag * real[t];

                real[t] = real[u] - tr;
                imag[t] = imag[u] - ti;

                real[u] += tr;
                imag[u] += ti;

                // w = w * wm
                float temp = w_real;
                w_real = temp * wm_real - w_imag * wm_imag;
                w_imag = temp * wm_imag + w_imag * wm_real;
            }
        }
    }
}
```

Listing A.1 FFT Function

Interrupt Service Setup and Routine

```
void setupTimer1_1024Hz(){
    cli();
    TCCR1A = 0;
    TCCR1B = 0;
    OCR1A = 15624;        // 16MHz -> 1024Hz
    TCCR1B = 0x09;        // prescaler=1
    TIMSK1 = 0x02;        // enable OCR1A interrupt
    sei();
}

ISR(TIMER1_COMPA_vect){
    float sample = analogRead(A0); // read analog input
    real[writeBuf][sampleIndex] = sample;
    imag[writeBuf][sampleIndex] = 0.0;

    sampleIndex++;
    if (sampleIndex >= N){
        sampleIndex = 0;
        // Swap buffers
        uint8_t tmp = writeBuf;
        writeBuf = readBuf;
        readBuf = tmp;
        bufferReady = true;
    }
}
```

Listing A.2 Interrupt Service Setup and Routine in Arduino for Sampling

REFERENCES

[1] J. J. Vidal, "Toward direct brain–computer communication," *Annual Review of Biophysics and Bioengineering*, vol. 2, no. 1, pp. 157–180, 1973.

[2] J. Malmivuo and R. Plonsey, *Bioelectromagnetism: Principles and Applications of Bioelectric and Biomagnetic Fields*. New York, NY, USA: Oxford University Press, 1995.

[3] J. Saab, B. Battes, and M. Grosse-Wentrup, "Simultaneous eeg recordings with dry and wet electrodes in motor imagery," in *Proc. 12th Conf. of Junior Neuroscientists of Tübingen*, Heiligkreuztal, Germany, 2011.

[4] L. F. Nicolas-Alonso and J. Gómez-Gil, "Brain–computer interfaces, a review," *Sensors (Basel)*, vol. 12, no. 2, pp. 1211–1279, 2012.

[5] H.-J. Hwang, J.-H. Lim, Y.-J. Jung, H. Choi, S. W. Lee, and C.-H. Im, "Development of an ssvep-based bci spelling system adopting a qwerty-style led keyboard," *Journal of Neuroscience Methods*, vol. 208, no. 1, pp. 59–65, 2012.

[6] L. Zhang, X. J. Guo, X. P. Wu, and B. Y. Zhou, "Low-cost circuit design of eeg signal acquisition for the brain–computer interface system," in *Proc. 6th Int. Conf. on Biomedical Engineering and Informatics*, 2013, pp. 245–250.

[7] D. E. Thompson, S. Blain-Moraes, and J. E. Huggins, "Performance assessment in brain–computer interface-based augmentative and alternative communication," *Biomedical Engineering Online*, vol. 12, no. 43, 2013.

[8] M. Nafea, A. Aisha, N. A. Abdul-Kadir, and F. K. Che Harun, "Brainwave-controlled system for smart home applications," in *Proc. IEEE Int. Conf. on Biomedical and Pharmaceutical Sciences (ICBAPS)*, 2018, pp. 75–80.

[9] Bio-Medical, "Electrodes for emg | eeg | ecg | ekg," https://bio-medical.com/supplies/electrodes.html, 2018.

[10] g.tec Medical Engineering, "Comparison: Active versus passive electrodes," http://www.gtec.at/News-Events/Newsletter/Newsletter-September-2010-Volume-29/articles/Comparision-active-versus-passive-electrodes2, 2018.

[11] S. M. S. Morsalin and S.-C. Lai, "Front-end circuit design for electroencephalography (eeg) signal," in *Proc. Indo–Taiwan Int. Conf. on Computing, Analytics and Networks (Indo-Taiwan ICAN)*, 2020, pp. 170–175.

[12] Analog Devices, “Ad620: Low cost, low power instrumentation amplifier,” Analog Devices, Inc., Norwood, MA, USA, Tech. Rep. Rev. G, 2023, datasheet. [Online]. Available: https://www.analog.com/media/en/technical-documentation/data-sheets/AD620.pdf

[13] *ATmega328P Datasheet*, Microchip Technology, 2018, available at http://ww1.microchip.com/downloads/en/DeviceDoc/ATmega328P-Data-Sheet-Complete-DS40002061A.pdf.