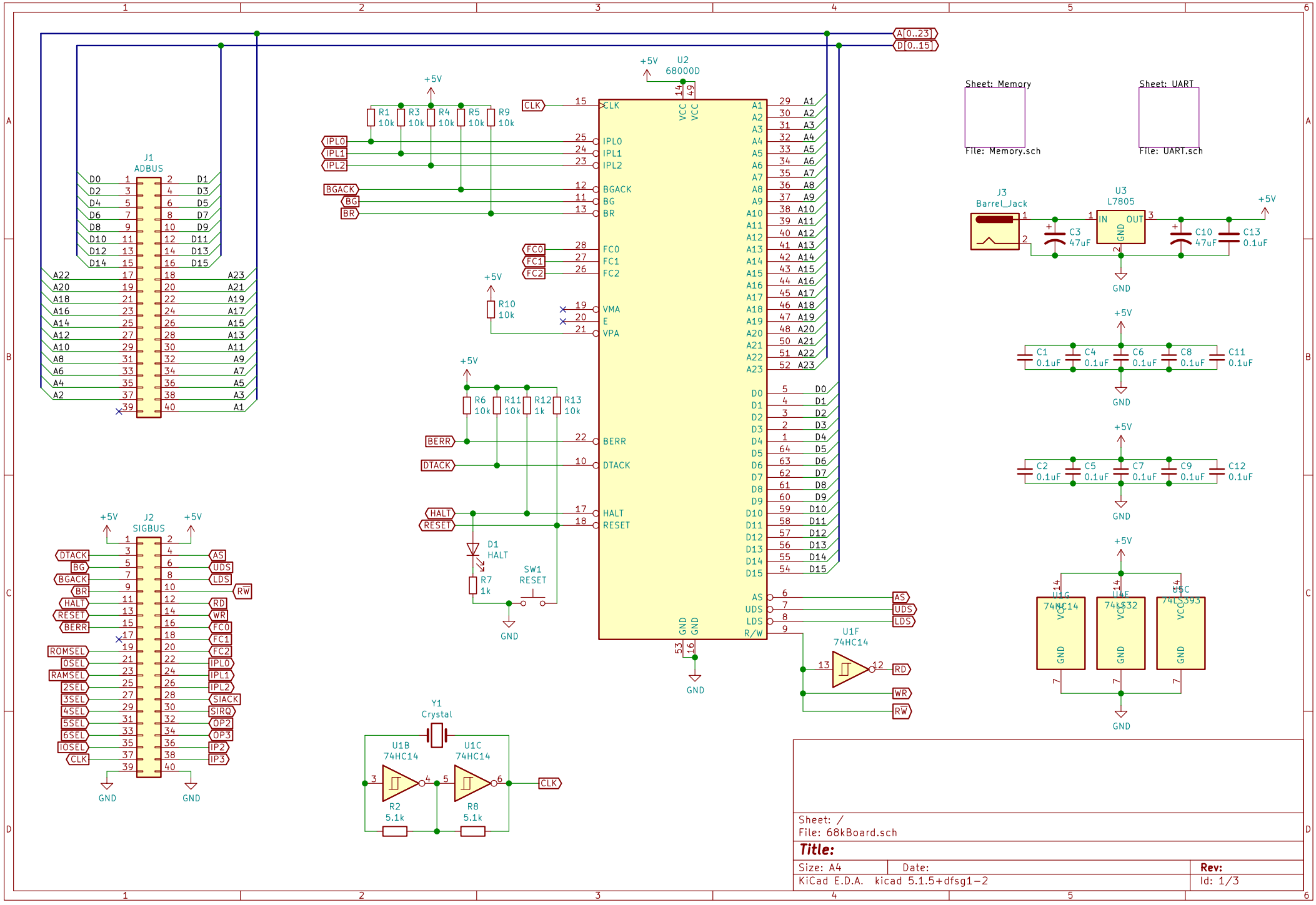

Sheet: /
File: 68kBoard.sch

Title:

Size: A4	Date:	Rev:
KiCad E.D.A. kicad 5.1.5+dfsg1-2		Id: 1/3

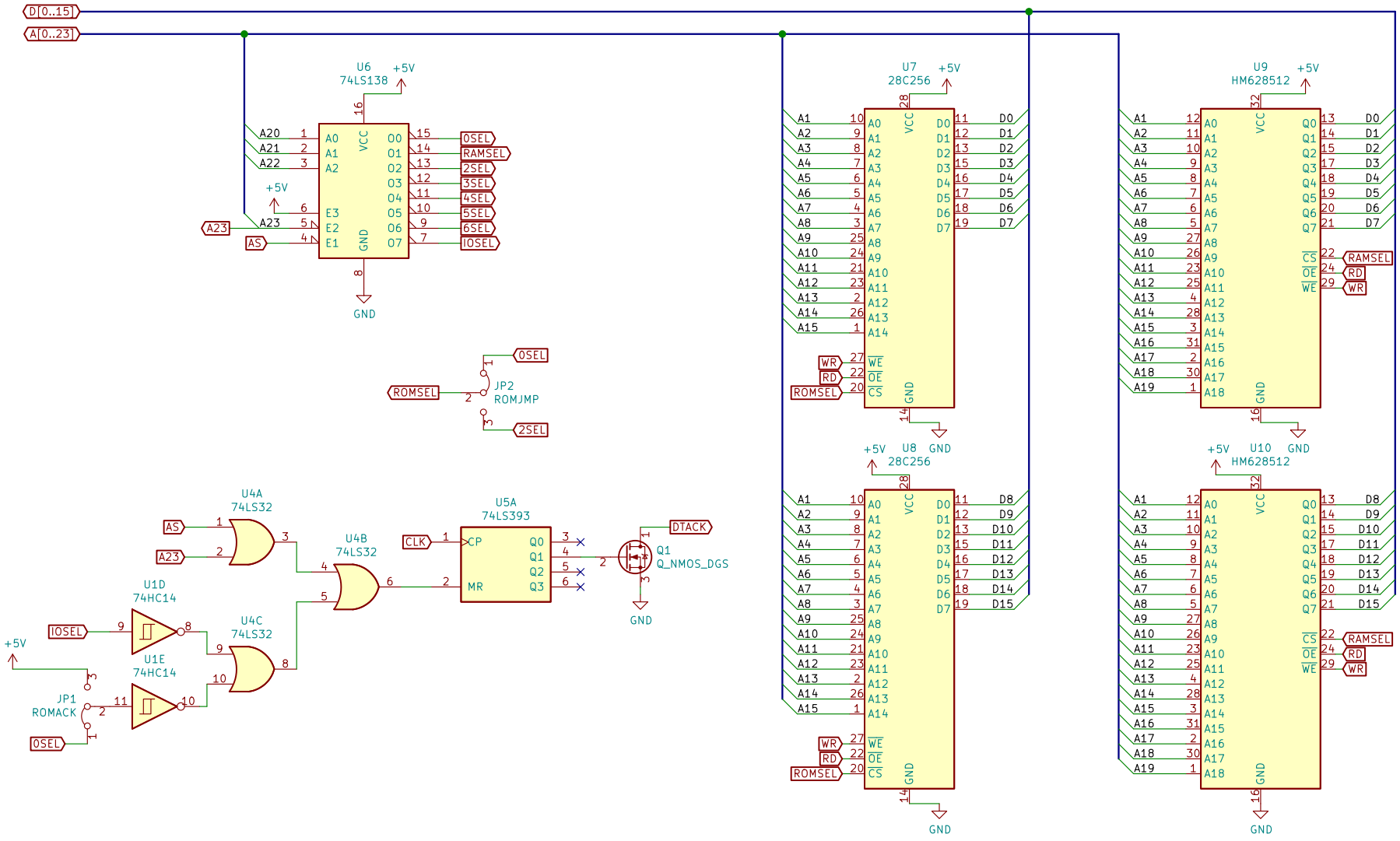

Sheet: /Memory/
File: Memory.sch

Title:

Size: A4	Date:	Rev:
KiCad E.D.A. kicad 5.1.5+dfsg1-2		Id: 2/3

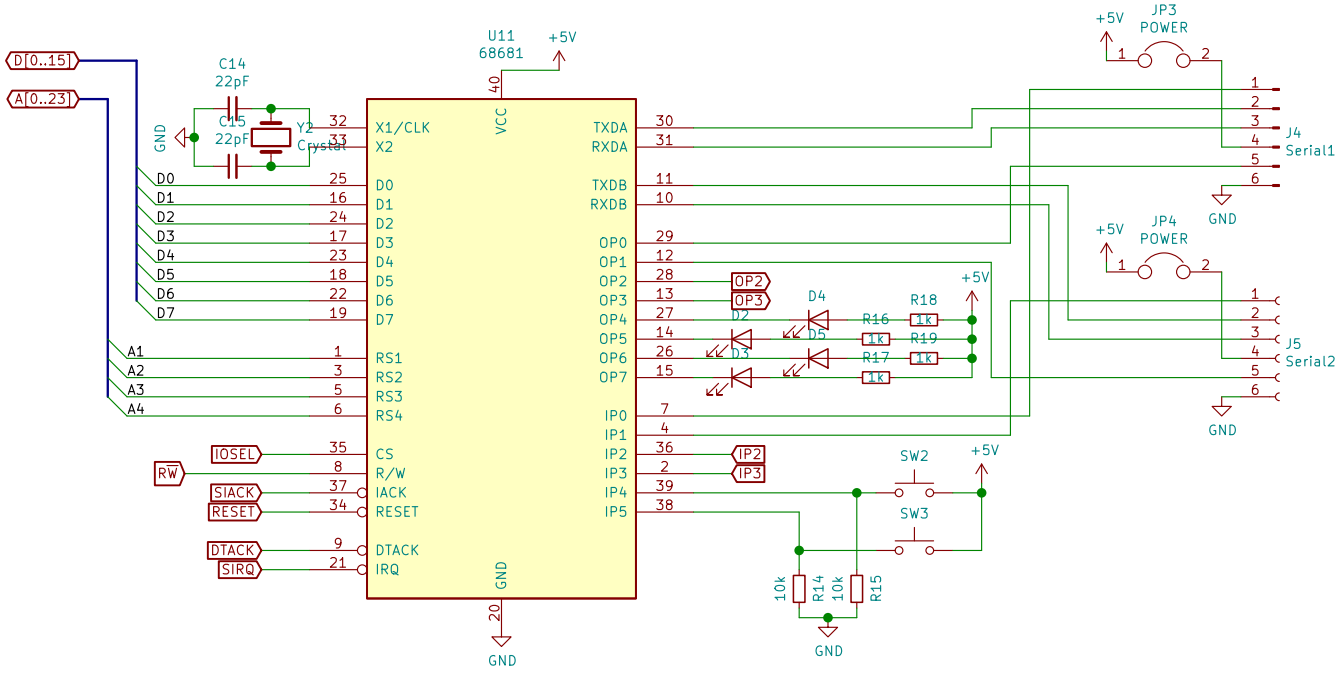

Sheet: /UART/
File: UART.sch

Title:

Size: A4	Date:	Rev:
KiCad E.D.A. kicad 5.1.5+dfsg1-2		Id: 3/3