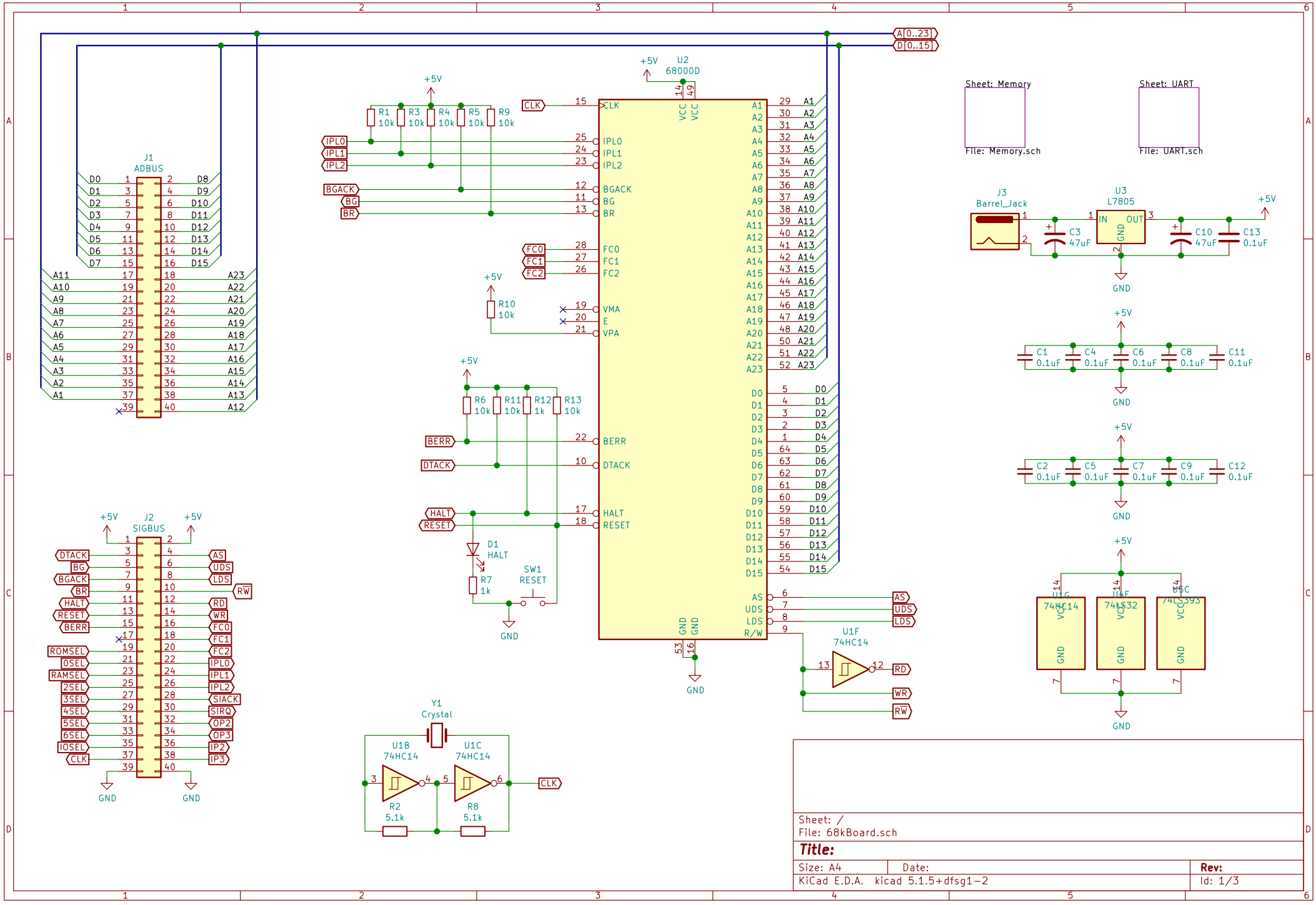
A[0..23]
D[0..15]
J1
ADBUS
J2
SIGBUS
U2
68000D
CLK
IPL0
IPL1
IPL2
BGACK
BG
BR
FC0
FC1
FC2
VMA
E
VPA
BERR
DTACK
HALT
RESET
AS
UDS
LDS
R/W
RD
WR
RW
ROMSEL
IOSEL
RAMSEL
2SEL
3SEL
4SEL
5SEL
6SEL
IOSEL
SIACK
SIRQ
OP2
OP3
IP2
IP3
R1 10k
R3 10k
R4 10k
R5 10k
R9 10k
R10 10k
R6 10k
R11 10k
R12 1k
R13 10k
D1 HALT
R7 1k
SW1 RESET
Y1 Crystal
U1B 74HC14
U1C 74HC14
R2 5.1k
R8 5.1k
U1F 74HC14
Sheet: Memory
File: Memory.sch
Sheet: UART
File: UART.sch
J3 Barrel_Jack
U3 L7805
C3 47uF
C10 47uF
C13 0.1uF
C1 0.1uF
C4 0.1uF
C6 0.1uF
C8 0.1uF
C11 0.1uF
C2 0.1uF
C5 0.1uF
C7 0.1uF
C9 0.1uF
C12 0.1uF
U1G 74HC14
U4F 74LS32
U4C 74LS393
+5V
GND
Sheet: /
File: 68kBoard.sch
Title:
Size: A4
Date:
Rev:
KiCad E.D.A. kicad 5.1.5+dfsg1-2
Id: 1/3

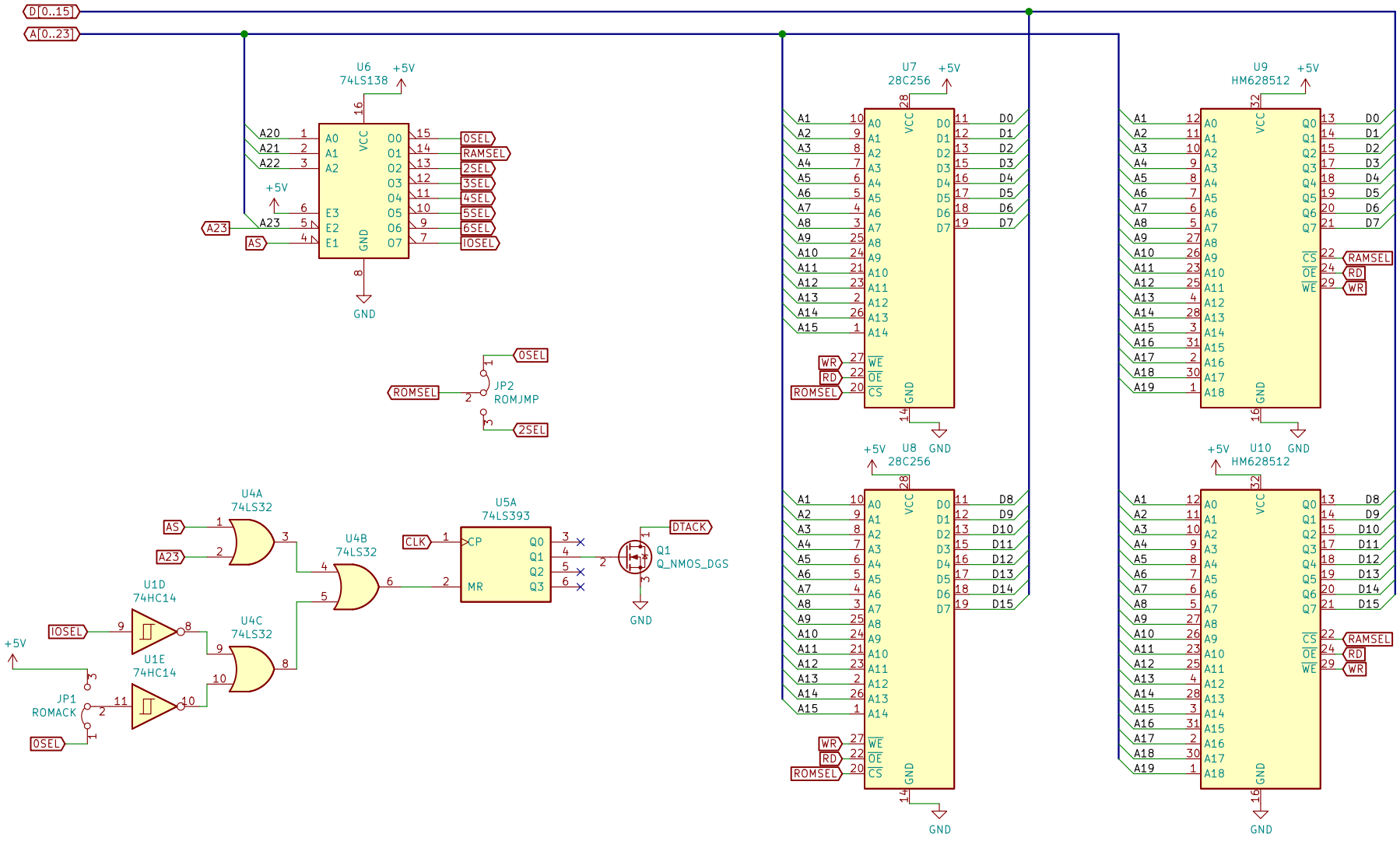

Sheet: /Memory/
File: Memory.sch

Title:

Size: A4	Date:	Rev:
KiCad E.D.A. kicad 5.1.5+dfsg1-2		Id: 2/3

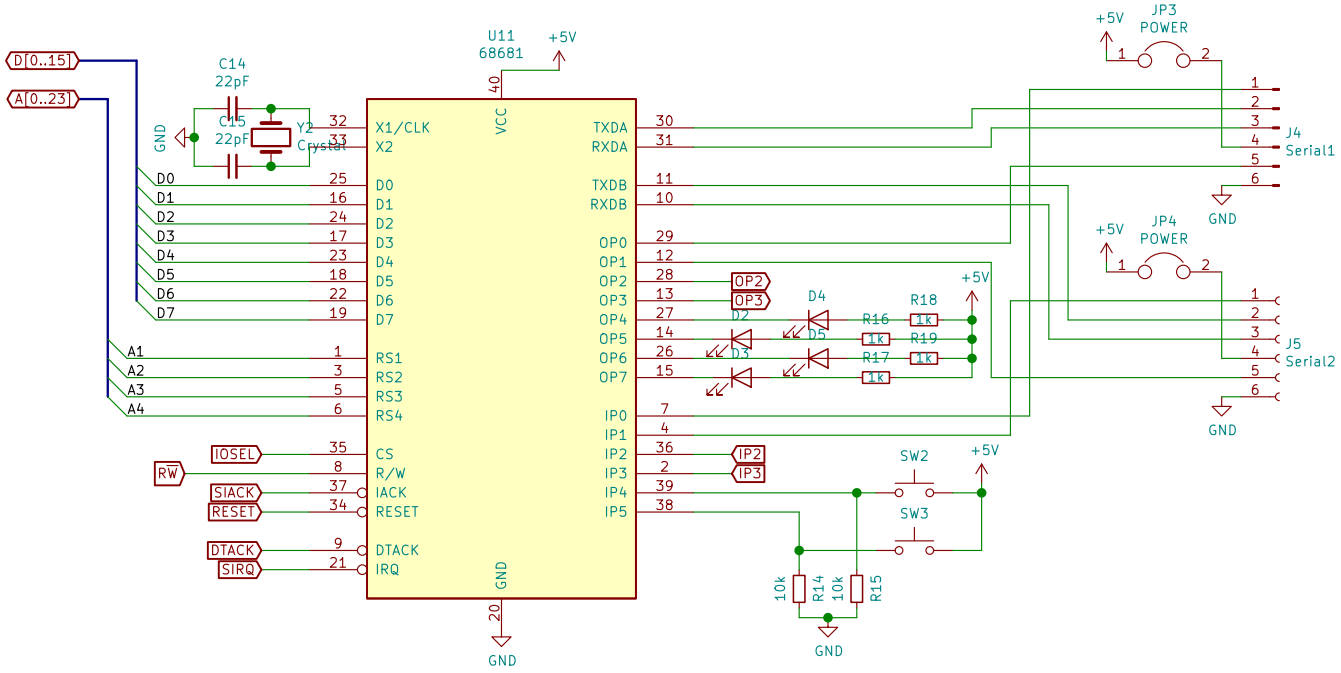

Sheet: /UART/
File: UART.sch

Title:

Size: A4	Date:	Rev:
KiCad E.D.A. kicad 5.1.5+dfsg1-2		Id: 3/3