THESIS SUMMARY

HAIDER MATIN

Unmonitored tool wear compromises quality, increases costs, and risks catastrophic failure.

In high-precision turning processes, cutting tools are subjected to extreme mechanical and thermal loads, leading to inevitable wear. This degradation has significant consequences:

- **Quality Degradation**: Leads to poor surface finish and dimensional inconsistencies in manufactured parts.
- **Increased Costs**: Premature tool replacement wastes tool life, while delayed replacement causes scrap and rework.
- **Process Disruption**: Unexpected tool breakage can damage the workpiece and the machine itself, causing costly downtime.

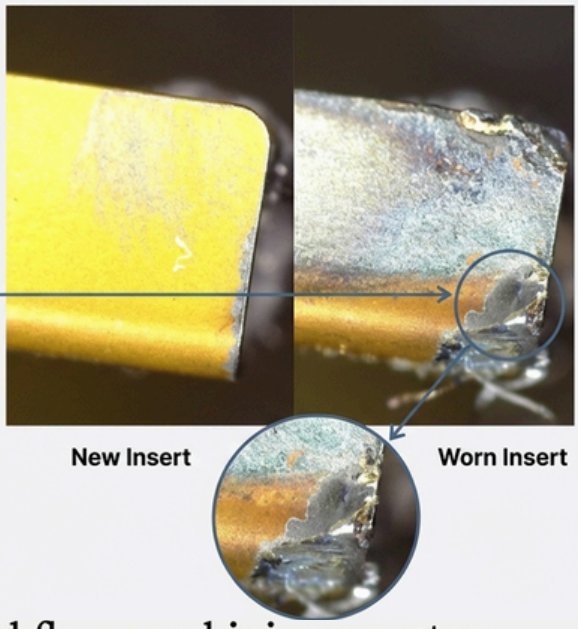

Our solution is a complete workflow combining a custom multi-sensor system with advanced machine learning.

We developed an end-to-end Tool Wear Monitoring (TWM) system to predict flank wear in real time. The workflow transforms raw physical signals into actionable intelligence.

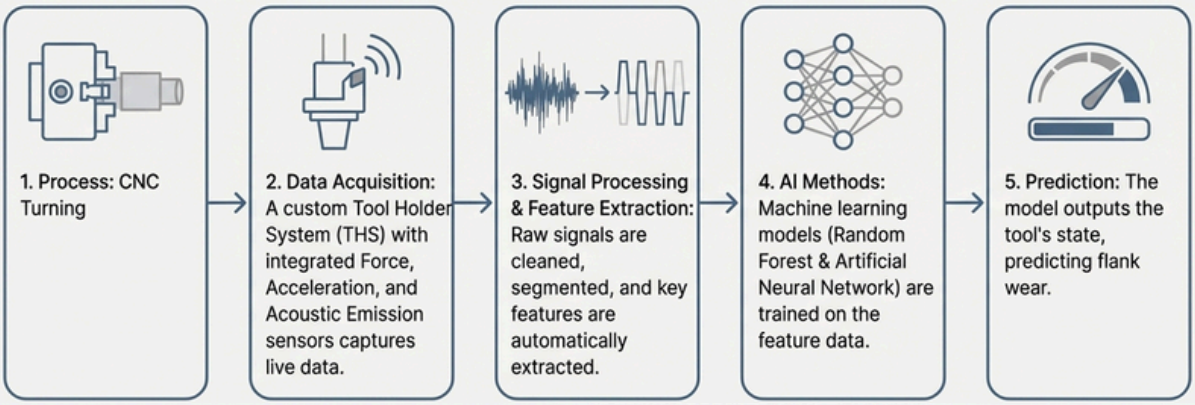

The multi-sensor Tool Holder System was systematically designed and validated through simulation.

A standard tool holder was redesigned to integrate sensors as close to the cutting action as possible. Three conceptual designs for force sensor integration were modelled and evaluated.

Sensor Selection:

- **Force**: KISTLER 9132C (Piezoelectric, Range: 0-7 kN)
- **Force**: KISTLER 9132C (Piezoelectric, Range: 0-7 kN)
- **Acceleration**: PCB Piezotronics J352C68 (Single-axis, Range: ±491 m/s²)
- **Acoustic Emission**: Vallen Systeme VS75V (Range: 30-120 kHz)

Design Validation:

Static structural simulations in ANSYS were used to evaluate the conceptual models. A 200N cutting force was applied to the tool tip to analyse the resulting force on the sensor. The first conceptual design was selected for manufacturing.

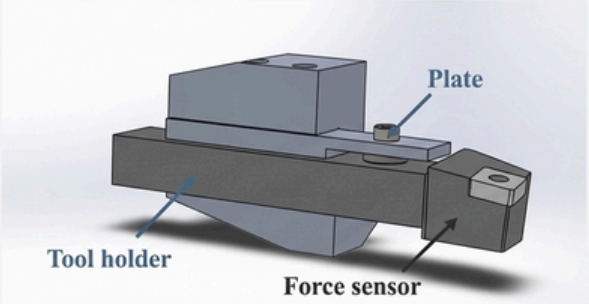

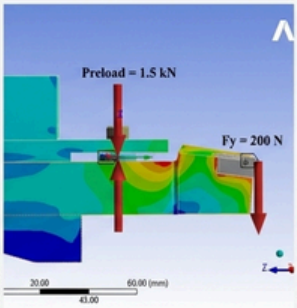

The final manufactured system integrates four sensors with purpose-built protective housing

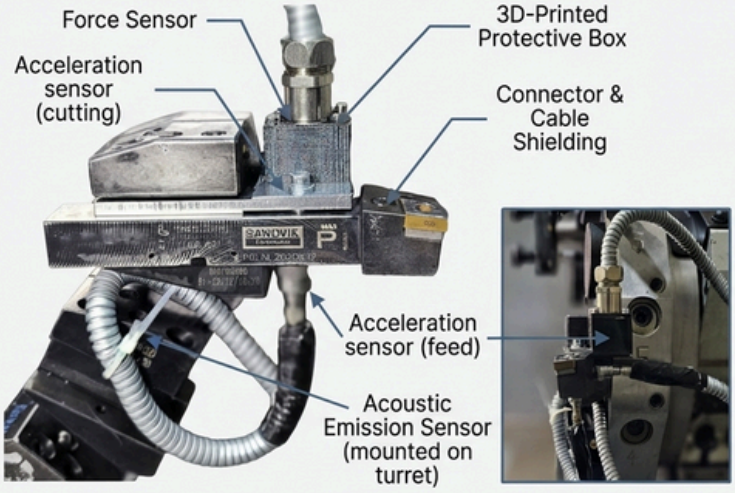

The final THS successfully incorporates all selected sensors, ensuring robust data collection during the turning process.

- **Force Sensor:** Integrated between the tool holder and a custom-designed plate.
- **Acceleration Sensors:** Two sensors are mounted to measure vibrations in both the cutting and feed directions.
- **Acoustic Emission Sensor:** Attached directly to the machine turret via a magnetic clamp.
- **Sensor & Cable Safety:** A custom 3D-printed (FDM) box protects the force sensor, while a plastic covering hose shields its delicate cable from sharp chips.

Turning tests were conducted on 42CrMo4 steel with a robust data acquisition and wear measurement system.

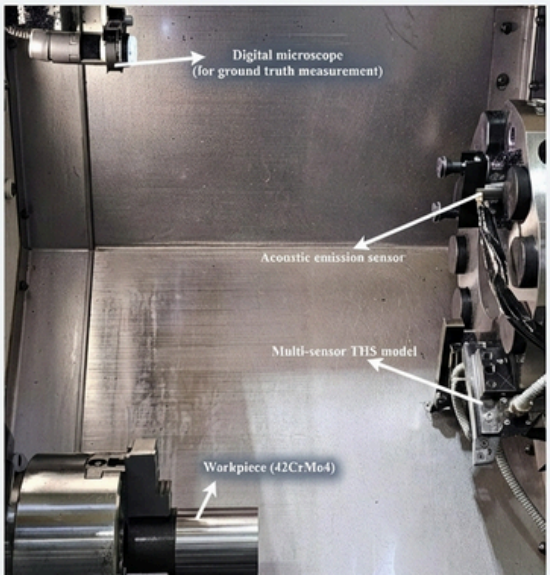

A series of sixteen turning tests were performed using four Sandvik-Coromant cutting inserts.

Experimental Setup: The multi-sensor THS was mounted on a CNC turning machine.

Wear Measurement: After each turning pass, a Dino-Lite digital microscope, fixed inside the machine, captured high-resolution images of the cutting edge. Flank wear (VB) was measured directly from these images, providing the ground truth data for training the ML models.

Data Acquisition: Signals from all four sensors were captured simultaneously. Force and acceleration were sampled at 48 kHz; Acoustic Emission at 192 kHz. Signals were passed through dedicated amplifiers and conditioners before being digitized by a QuantomX DAQ device.

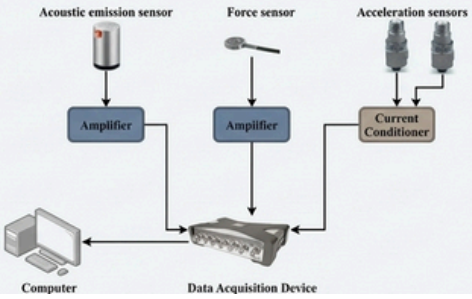

Raw sensor signals are segmented and filtered to isolate the active cutting process.

The raw data stream contains periods of inactivity and noise. To ensure the ML model trains only on relevant information, a two-step process was applied:

1. **Segmentation**: A peak-finding algorithm (SciPy `find_peaks`) was used to automatically identify the start and end of each cutting pass, trimming the signal to include only the active machining period.
2. **Filtering**: A Butterworth high-pass filter (10 Hz cutoff) was applied to the cutting force signal to remove low-frequency drift caused by thermal effects on the sensor.

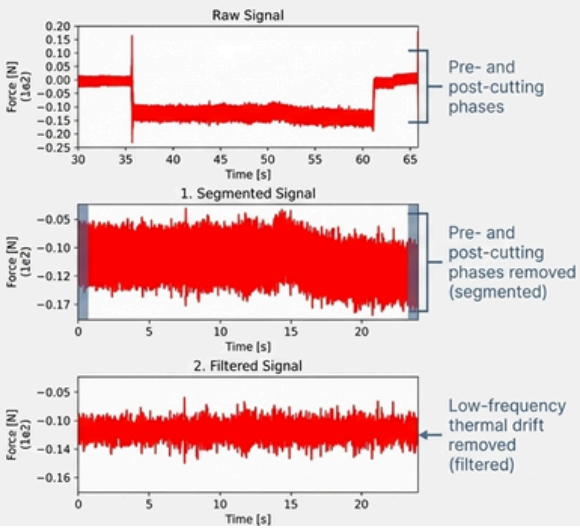

Two Machine Learning Models Were Tested with Three Different Sensor Combinations

Random Forest (RF): A robust ensemble learning method based on decision trees.

Artificial Neural Network (ANN): A feed-forward neural network with five hidden layers, designed to capture complex non-linear relationships.

Both models were trained and tested on the same dataset, derived from 16 full turning tests. To determine the value of multi-sensor fusion, performance was evaluated across three distinct feature sets.

Feature Set	Sensors Included
Feature Set 1	Force + Acceleration (Cutting)
Feature Set 2	Force + Acceleration (Cutting) + Acceleration (Feed)
Feature Set 3	Force + Acceleration (Cutting) + Acceleration (Feed) + Acoustic Emission

A Validated End-to-End System for the Shift to Predictive Manufacturing

This work successfully developed and validated an entire workflow for intelligent tool wear monitoring, encompassing:

- A robust, custom-designed multi-sensor hardware system (THS).
- An automated data processing pipeline to handle real-world sensor signals.
- An optimized ANN model that accurately predicts tool wear by fusing data from multiple sensors.

From **Reactive Maintenance**
(scheduled changes, unexpected failures)

To **Predictive Maintenance**
(data-driven decisions, optimized tool life, enhanced quality)

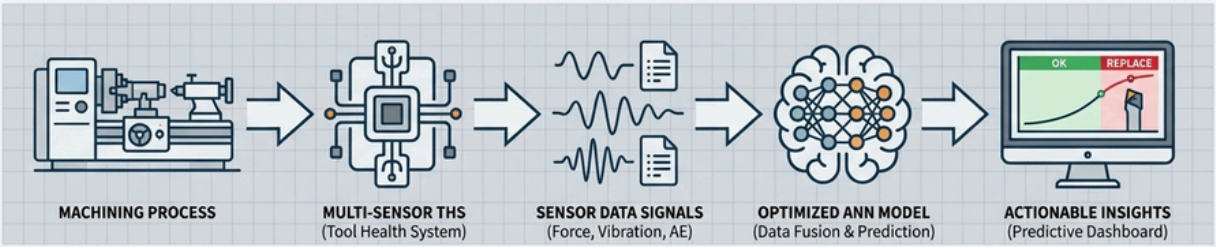

DRAWING

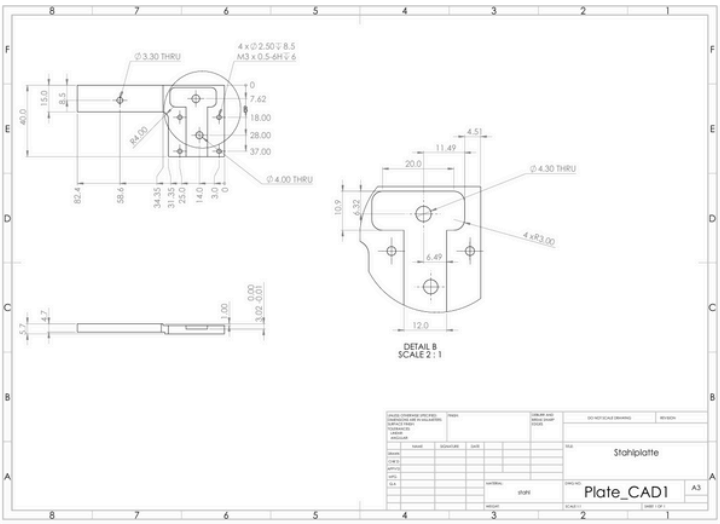

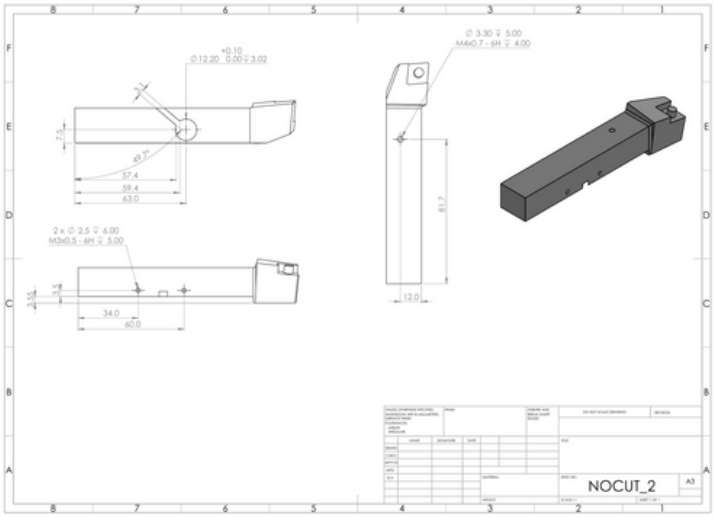

PLATE

TOOL HOLDER