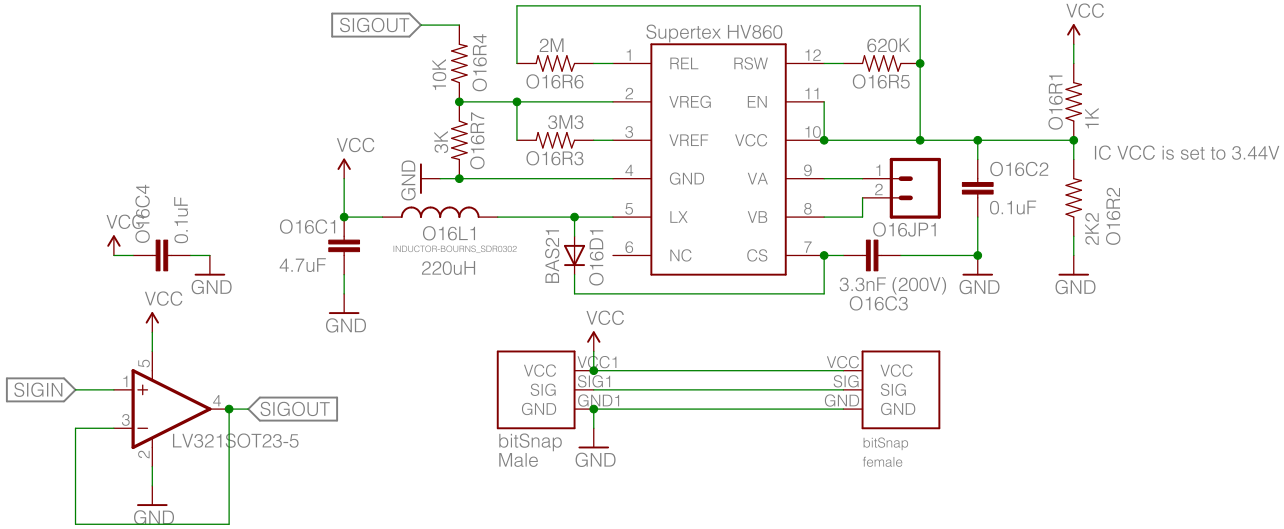

Released under the Creative Commons Attribution Share-Alike 3.0 License
http://creativecommons.org/licenses/by-sa/3.0
And Open Source Hardware (OSHW) Definition 1.0
http://freedomdefined.org/OSHW
Designed by: littleBits.cc

open hardware

littleBits Electronics, Inc.		
TITLE: LB_BIT_o16_LIGHTWIRE-v03(rev2)		
Approval Inits:	Date:	REV:
Date: 9/4/13 11:52 AM		Sheet: 1/1