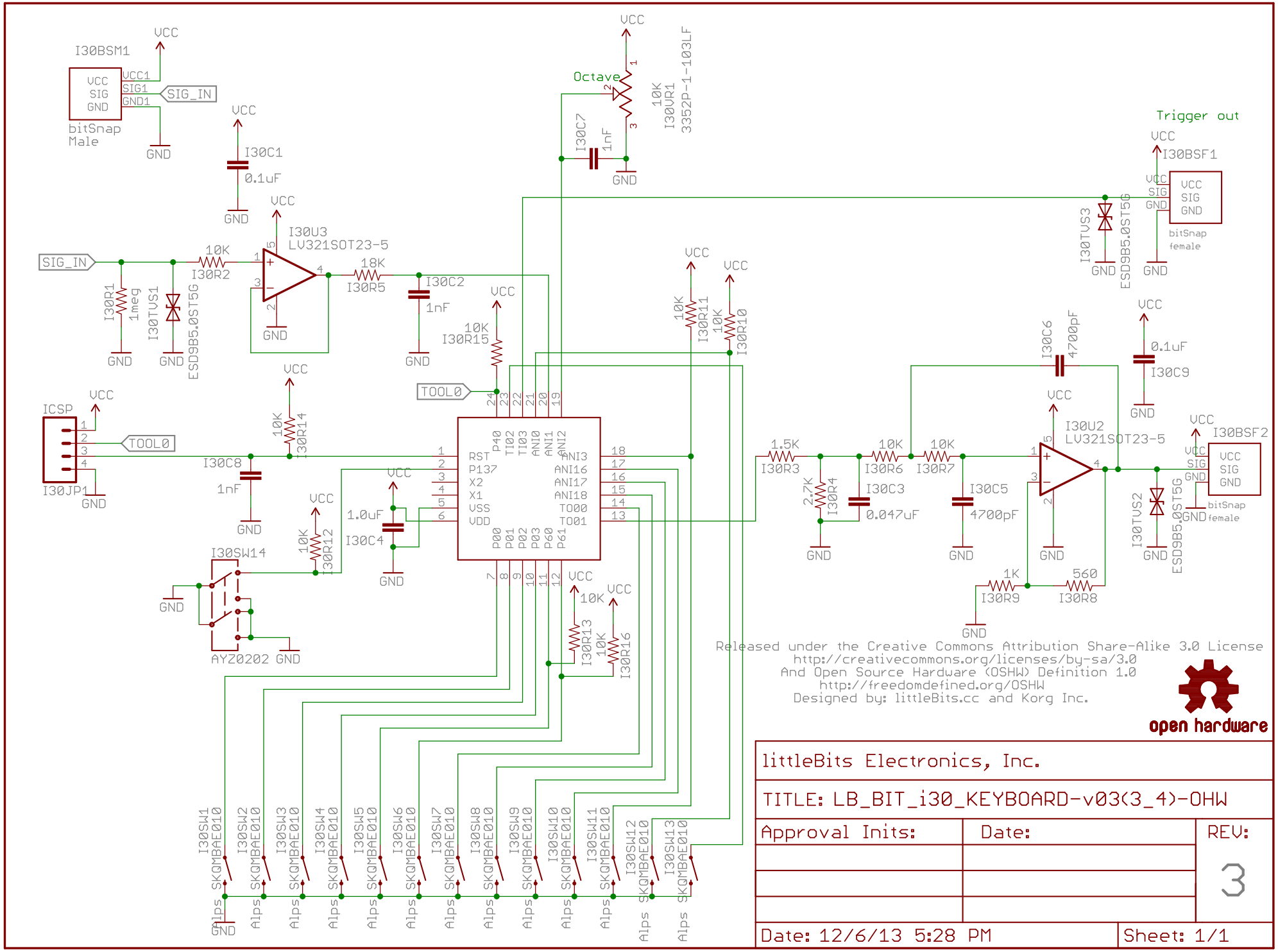

Released under the Creative Commons Attribution Share-Alike 3.0 License
http://creativecommons.org/licenses/by-sa/3.0
And Open Source Hardware (OSHW) Definition 1.0
http://freedomdefined.org/OSHW
Designed by: littleBits.cc and Korg Inc.

open hardware

littleBits Electronics, Inc.		
TITLE: LB_BIT_i30_KEYBOARD-v03(3_4)-OHW		
Approval Inits:	Date:	REV: 3
Date: 12/6/13 5:28 PM		Sheet: 1/1