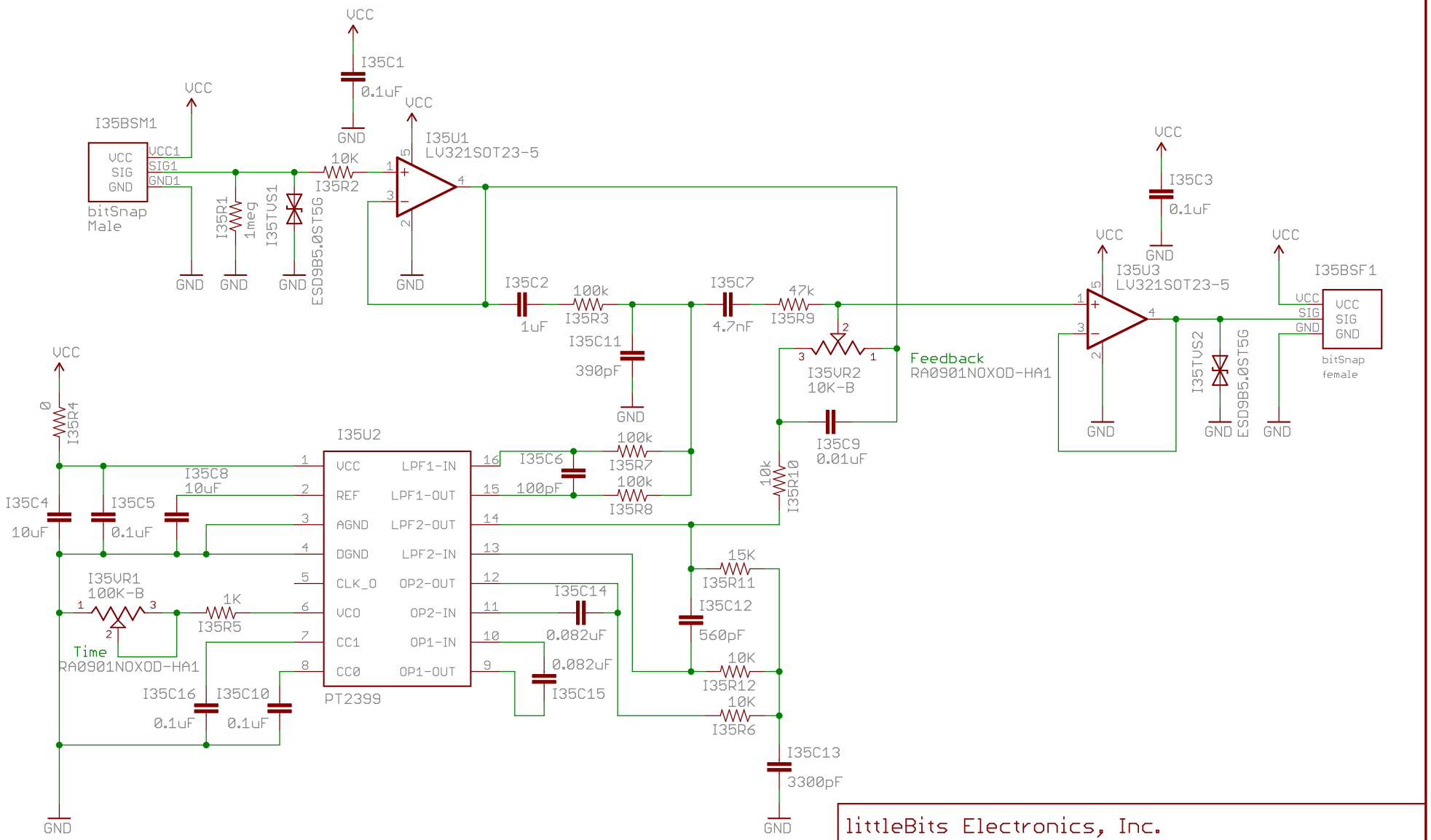

Released under the Creative Commons Attribution Share-Alike 3.0 License
http://creativecommons.org/licenses/by-sa/3.0
And Open Source Hardware (OSHW) Definition 1.0
http://freedomdefined.org/OSHW
Designed by: littleBits.cc and Korg Inc.

open hardware

littleBits Electronics, Inc.		
TITLE: LB_BIT_i35_delay-v03(5_5)		
Approval Inits:	Date:	REV: 5
Date: 12/6/2013 2:59:22 PM		Sheet: 1/1