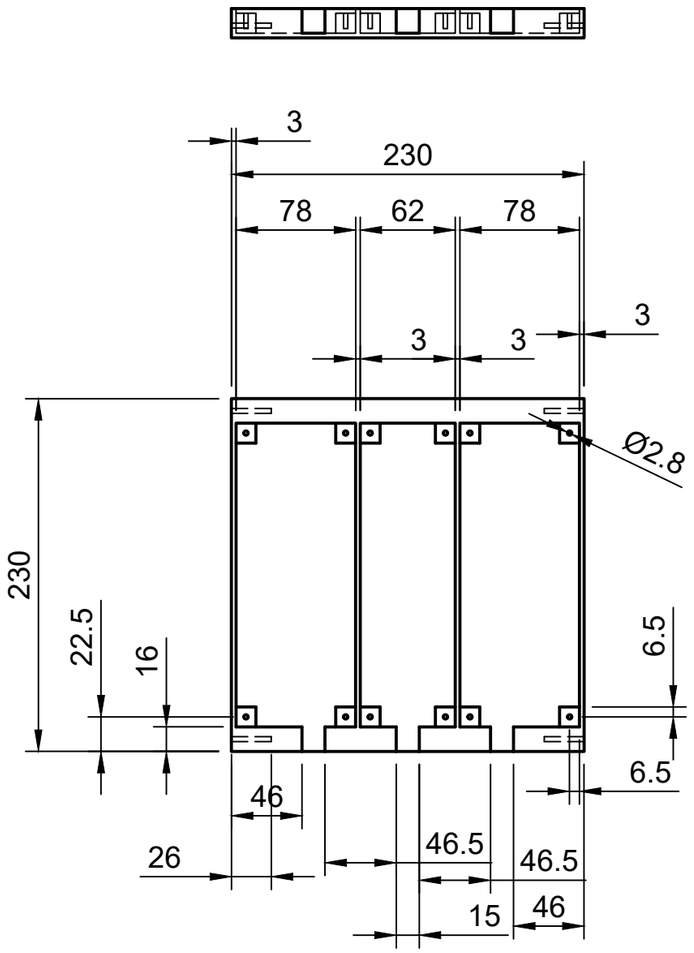

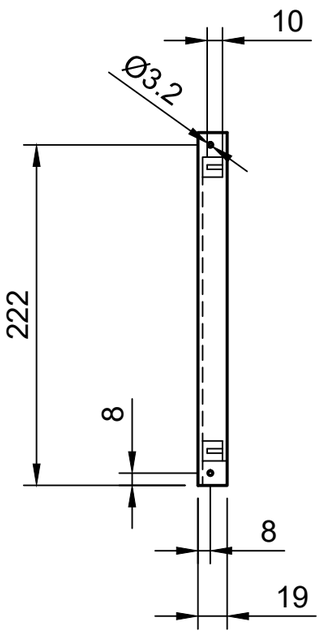

Dept.	Technical reference	Created by Milan Caban 12/28/2024	Approved by
		Document type	Document status
		Title Floor	DWG No.
			Rev. / Date of issue / Sheet 1/1