Sheet: Heater Control

File: Htr_Fan_expansion.sch

Sheet: Stepper Driver

File: Stepper_Drv_expansion.sch

Sheet: Headers

File: Headers_expansion.sch

http://www.ohwr.org/attachments/2388/cern_ohl_v_1_2.txt
CERN OSH License 1.2:
Think3DPrint3D, RepRapPro

File: Duet_expansion0.2.sch
Sheet: /

Title: Duet Expansion Board

Size: A4	Date: 18 oct 2013	**Rev: 0.2**
KiCad E.D.A. eeschema (2012-01-19 BZR 3256)-stable		Id: 1/4

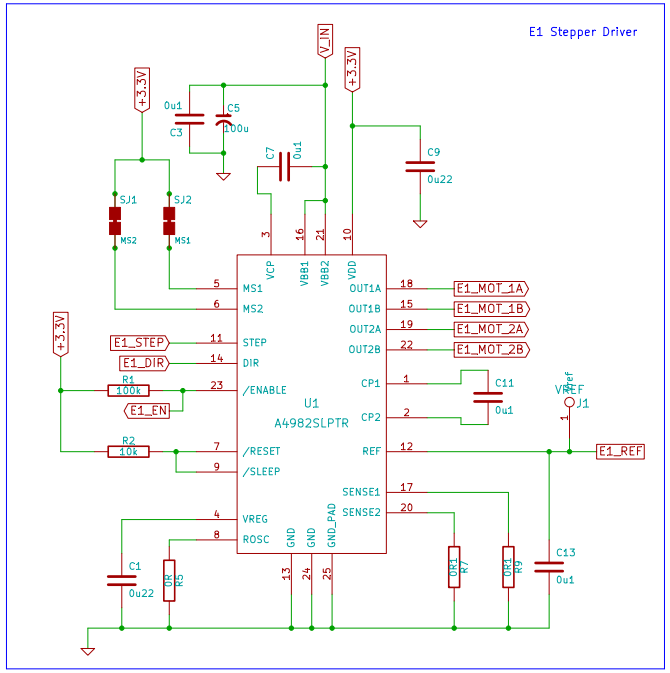

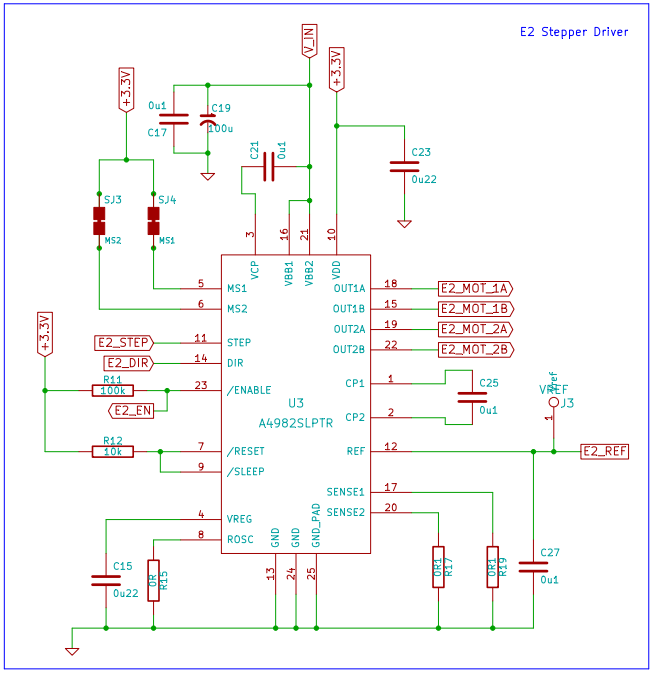

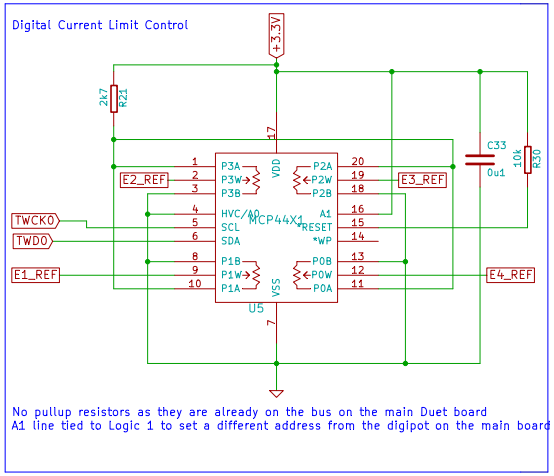

No pullup resistors as they are already on the bus on the main Duet board
A1 line tied to Logic 1 to set a different address from the digipot on the main board

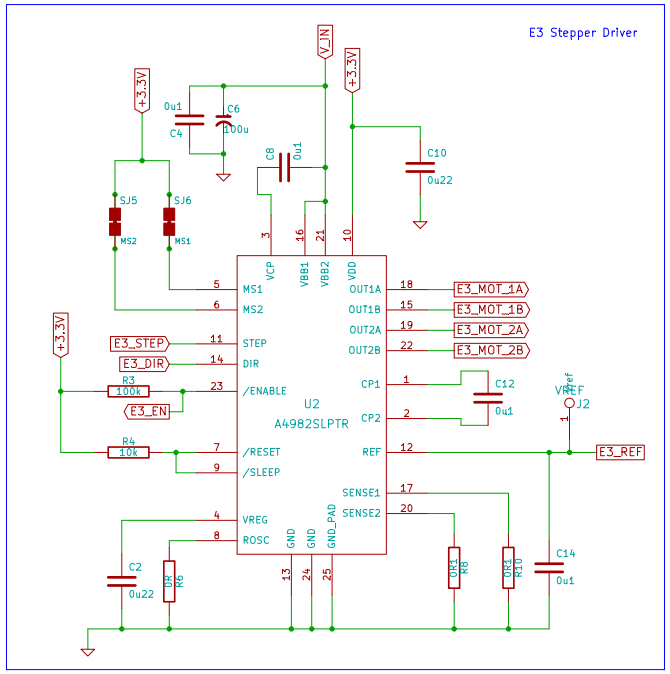

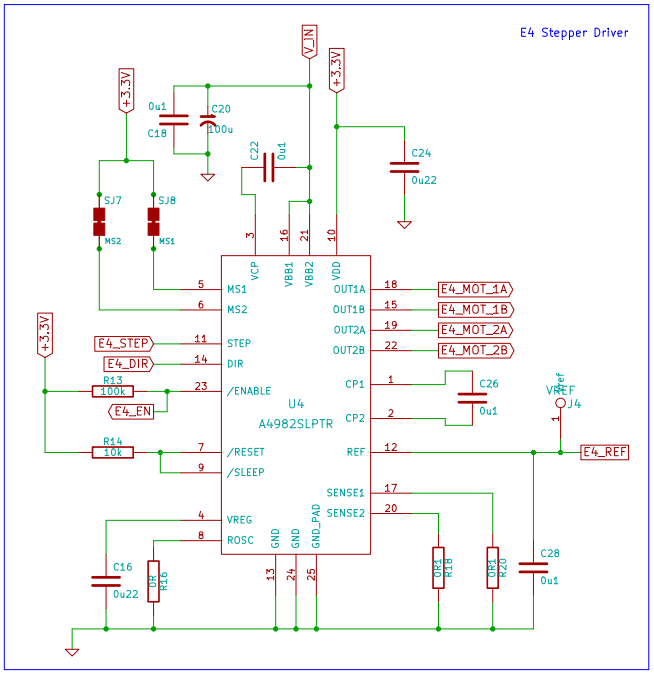

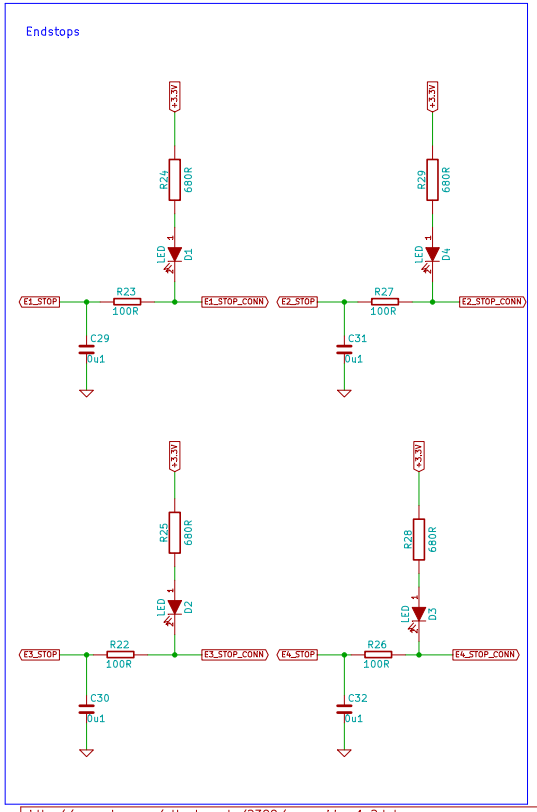

http://www.ohwr.org/attachments/2388/cern_ohl_v_1_2.txt
CERN OSH License 1.2:
Think3DPrint3D, RepRapPro

File: Stepper_Drv_expansion.sch
Sheet: /Stepper Driver/

Title: Duet Expansion Board

Size: A3	Date: 18 oct 2013	**Rev: 0.2**
KICad E.D.A. eeschema (2012-01-19 BZR 3256)-stable		Id: 2/4

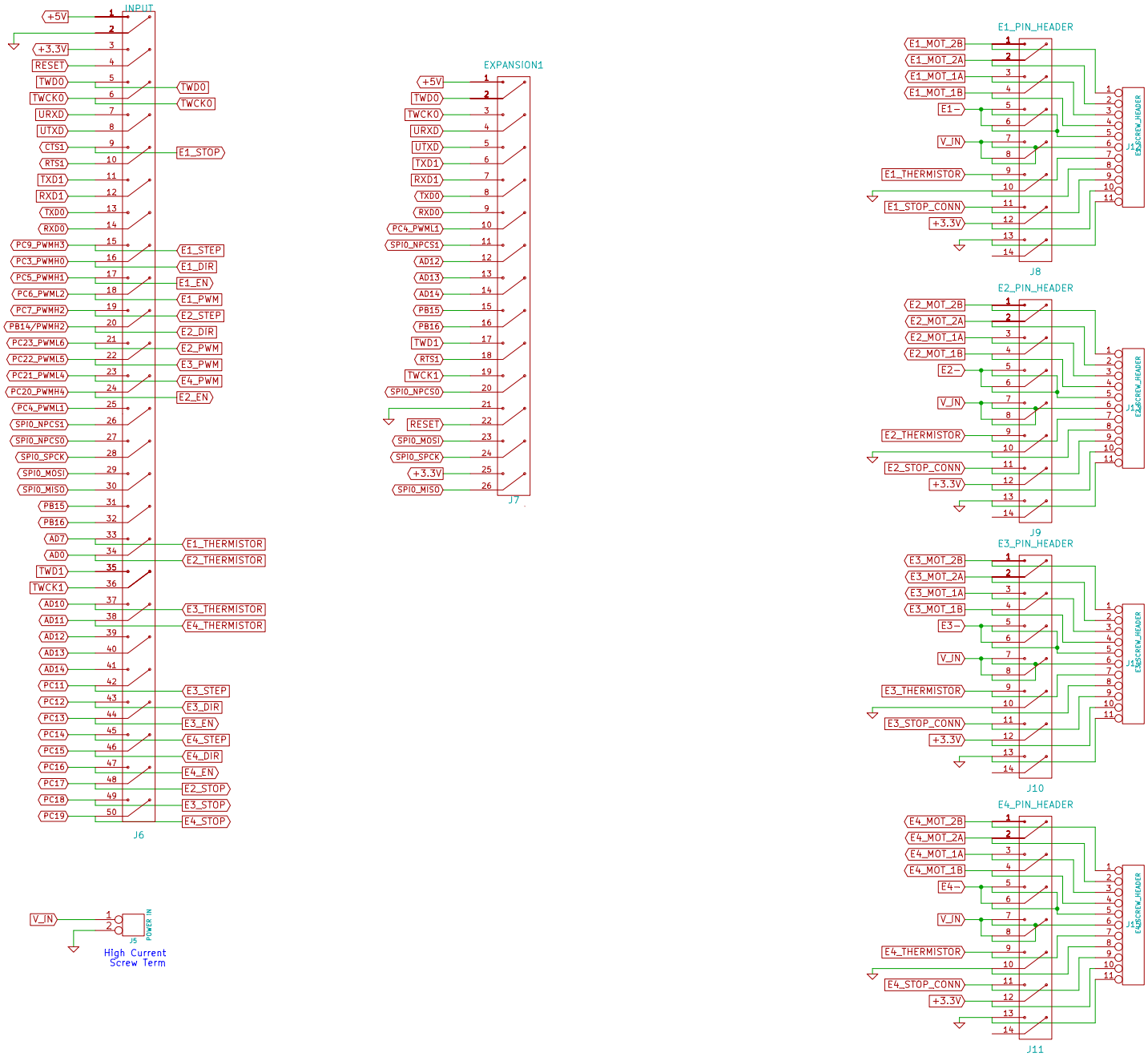

http://www.ohwr.org/attachments/2388/cern_ohl_v_1_2.txt
CERN OSH License 1.2:
Think3DPrint3D, RepRapPro

File: Headers_expansion.sch
Sheet: /Headers/

Title: Duet Expansion Board

Size: A3	Date: 18 oct 2013	**Rev: 0.2**
KICad E.D.A. eeschema (2012-01-19 BZR 3256)-stable		Id: 3/4

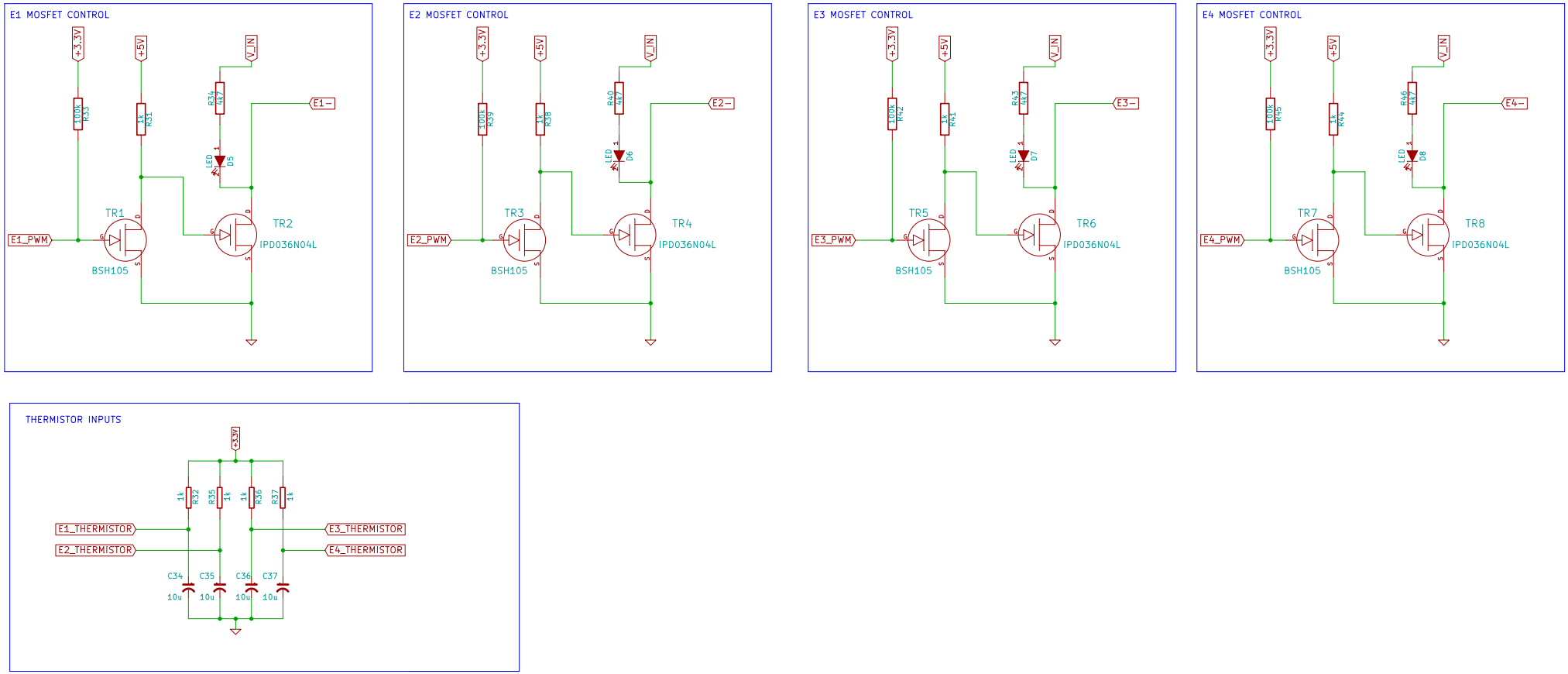

http://www.ohwr.org/attachments/2388/cern_ohl_v_1_2.txt
CERN OSH License 1.2:
Think3DPrint3D, RepRapPro

File: Htr_Fan_expansion.sch
Sheet: /Heater Control/

Title: Duet Expansion Board

Size: A3	Date: 18 oct 2013	**Rev: 0.2**
KICad E.D.A. eeschema (2012-01-19 BZR 3256)-stable		Id: 4/4