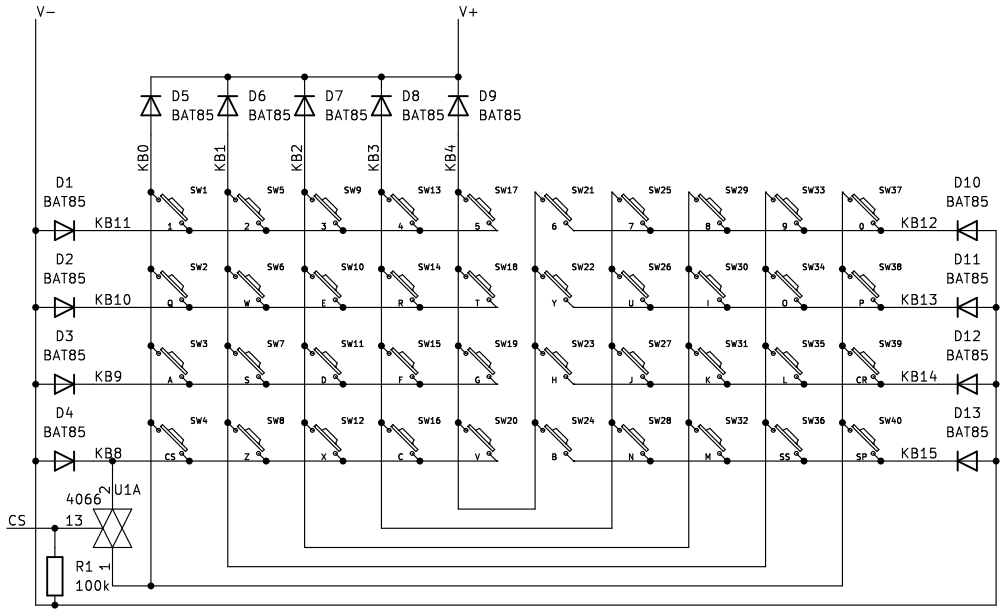


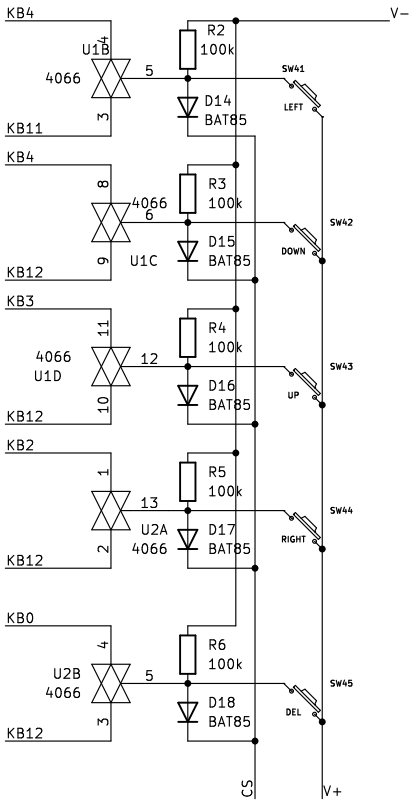


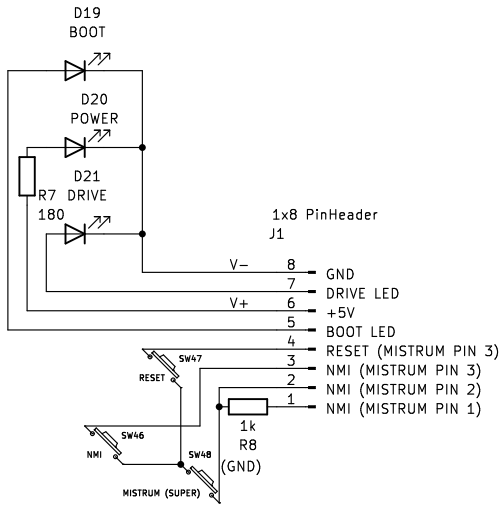


| MISTRUM | SPECTRUM |
|---|---|
| A11 | KB11 |
| A12 | KB12 |
| A10 | KB10 |
| A13 | KB13 |
| A9 | KB9 |
| A14 | KB14 |
| A8 | KB8 |
| A15 | KB15 |
| KL13 | KB0 |
| KL12 | KB1 |
| KL11 | KB2 |
| KL10 | KB3 |
| KL9 | KB4 |

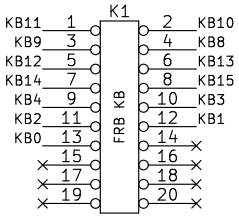


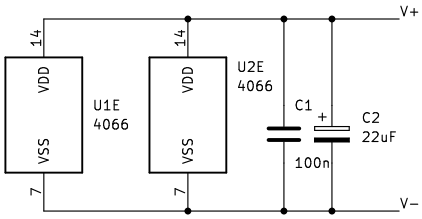


Pozn. Neosazovat D1–D13, pokud je přivedeno +5V na J1 pin–6

Sheet: /
File: Mistrum_Klavesnice.kicad_sch

**Title: MISTRUM – Cherry MX Klávesnice**

| | | |
|---|---|---|
| Size: A4 | Date: 2024-04-25 | **Rev: 1.1** |
| KiCad E.D.A. kicad 7.0.9 | | Id: 1/1 |