Engineering Notebook

NOTEBOOK NO. One

CONTINUED FROM NOTEBOOK NO._____ CONTINUED TO NOTEBOOK NO._____

ASSIGNED TO

NAME 7432E Equinox

SIGNATURE Emma Meihofer DATE 06/03/2020

DATE ISSUED 06/03/2020

PHONE (803) 563-0914

COMPANY Dutch Fork High School

DEPARTMENT VEX Robotics

ADDRESS 1400 Old Tamah Rd

CITY Irmo STATE SC ZIP 29063

DATE NOTEBOOK COMPLETED_____

NOTES:

Table Of Contents

Page	Title	Date
7	Team Profile	06/03/2020
8	VEX Change-Up Overview	06/03/2020
9-16	Design Process: Challenge - Rules	06/03/2020
17-19	Design Process: Challenge - Rules	06/06/2020
20	Design Process: Challenge - Field Sketch	06/06/2020
21-26	Design Process: Challenge - Field Specifications	06/06/2020
27	Design Process: Challenge - Skills Rules	06/06/2020
28	Design Process: Challenge - Skills Field Sketch	06/10/2020
29	Design Process: Challenge - Scoring	06/10/2020
30	Season Schedule Breakdown	06/10/2020
31	June Schedule Breakdown	06/10/2020
32	Game Goals	06/12/2020
33	Design Process: Brainstorm - Concepts	06/12/2020
34	Design Process: Brainstorm - Chassis Design One	06/12/2020
35	Design Process: Brainstorm - Chassis Design Two	06/12/2020
36	Design Process: Brainstorm - Chassis Design Three	06/12/2020
37	Design Process: Brainstorm - Chassis Decision Matrix	06/12/2020
38	Design Process: Brainstorm - Chassis Final Design	06/12/2020
39	Design Process: Brainstorm - Front Intake Design One	06/12/2020
40	Design Process: Brainstorm - Front Intake Design Two	06/12/2020
41	Design Process: Brainstorm - Front Intake Design Three	06/12/2020
42	Design Process: Brainstorm - Front Intake Design Four	06/12/2020
43	Design Process: Brainstorm - Front Intake Decision Matrix	06/12/2020
44	Design Process: Brainstorm - Front Intake Final Design	06/12/2020
45	Design Process: Brainstorm - Ball Lift Design One	06/12/2020

Table Of Contents

Page	Title	Date
46	Design Process: Brainstorm - Ball Lift Design Two	06/12/2020
47	Design Process: Brainstorm - Ball Lift Design Three	06/12/2020
48	Design Process: Brainstorm - Ball Lift Decision Matrix	06/12/2020
49	Design Process: Brainstorm - Ball Lift Final Design	06/12/2020
50	Design Process: Brainstorm - Launcher Design One	06/12/2020
51	Design Process: Brainstorm - Launcher Design Two	06/12/2020
52	Design Process: Brainstorm - Launcher Design Three	06/12/2020
53	Design Process: Brainstorm - Launcher Decision Matrix	06/12/2020
54	Design Process: Brainstorm - Launcher Final Design	06/12/2020
55	Design Process: Brainstorm - Hood Design One	06/12/2020
56	Design Process: Brainstorm - Hood Design Two	06/12/2020
57	Design Process: Brainstorm - Hood Design Three	06/12/2020
58	Design Process: Brainstorm - Hood Decision Matrix	06/12/2020
59	Design Process: Brainstorm - Hood Final Design	06/12/2020
60	Design Process: Build - Day 1: Chassis	06/13/2020
61	Design Process: Build - Day 2: Chassis	06/14/2020
62	Design Process: Program - Day 1: Chassis	06/14/2020
63	Design Process: Test - Chassis	06/14/2020
64	Design Process: Build - Day 2: Chassis	06/14/2020
65	Design Process: Build - Day 2: Front Intake	06/14/2020
66	Design Process: Build - Day 3: Front Intake	06/15/2020
67	Design Process: Program - Day 2: Front Intake	06/15/2020
68	Design Process: Test - Front Intake	06/15/2020
69	Design Process: Build - Day 4: Front Intake	06/17/2020
70	Design Process: Test - Front Intake	06/17/2020

Table Of Contents

Page	Title	Date
71	Design Process: Build - Day 5: Chassis and Front Intake	06/19/2020
72	Design Process: Test - Front Intake	06/19/2020
73	Design Process: Build - Day 6: Central Intake and Flywheel	06/20/2020
74	Design Process: Program - Day 3: Central Intake and Flywheel	06/20/2020
75	Design Process: Test - Central Intake and Flywheel	06/20/2020
76	Design Process: Build - Day 7: Central Intake Disassembly	06/24/2020
77	July Schedule Breakdown	07/01/2020
78	Design Process: Build - Day 8: Central Intake Disassembly	07/01/2020
79	Design Process: Build - Day 9: Central Intake	07/08/2020
80	Design Process: Build - Day 10: Central Intake	07/10/2020
81	Design Process: Build - Day 11: Flywheel	07/12/2020
82	Design Process: Test - Central Intake and Flywheel	07/14/2020
83	Design Process: Build - Day 12: Hood	07/14/2020
84	Design Process: Test - Hood	07/14/2020
85	Design Process: Build - Day 13: Hood	07/15/2020
86	Design Process: Test - Hood	07/15/2020
87	Design Process: Build - Day 14: Flywheel	07/16/2020
88	Design Process: Test - Flywheel	07/16/2020
89	Design Process: Build - Day 15: Flywheel	07/18/2020
90	Design Process: Test - Flywheel	07/18/2020
91	Design Process: Build - Day 15: Hood	07/18/2020
92	Design Process: Test - Robot	07/18/2020
93	Design Process: Build - Day 16: Front Intake	07/19/2020
94	Design Process: Build - Day 17: Front Intake	07/20/2020
95	Design Process: Test - Front Intake	07/20/2020

Table Of Contents

Page	Title	Date
96	Design Process: Build - Day 18: Flywheel Aimer and Hood	07/22/2020
97	Design Process: Test - Robot	07/22/2020
98	Design Process: Build - Day 19: Hood	07/23/2020
99	August Schedule Breakdown	08/01/2020
100	Design Process: Build - Day 20: Hood and Flywheel Aimer Disassembly	08/05/2020
101	September Schedule Breakdown	09/01/2020
102	Design Process: Build - Day 21: Chassis	09/10/2020
103	Design Process: Build - Day 22: Front Intake	09/14/2020
104	Design Process: Build - Day 23: Hood	09/17/2020
105	Design Process: Test - Intake	09/17/2020
106	Design Process: Build - Day 24: Hood Release mechanism Disassembly	09/21/2020
107	Design Process: Build - Day 25: Hood Release Mechanism Rebuild	09/24/2020
108	Design Process: Build - Day 26: Hood Release Mechanism Rebuild	09/28/2020
109	October Schedule Breakdown	10/01/2020
110	Design Process: Build - Day 27: Front Intake	10/01/2020
111	Design Process: Build - Day 28: Front Intake	10/05/2020
112	Design Process: Build - Day 29: Front Intake	10/08/2020
113	Design Process: Test - Robot	10/15/2020
114	Design Process: Build - Day 30: Front Intake	10/15/2020
115	Design Process: Build - Day 31: Front Intake	10/19/2020
116	Design Process: Test - Front Intake	10/22/2020
117	Design Process: Build - Day 31: Front Intake	10/26/2020

Page	Title	Date
118	Design Process: Test - Front Intake	10/29/2020
119	November Schedule Breakdown	11/01/2020
120	Design Process: Build - Day 32: Descore Mechanism	11/02/2020
121	Design Process: Test - Descore Mechanism	11/05/2020
122	Motor Port Layout	11/05/2020
123	Design Process: Build - Day 33: Descore Mechanism	11/09/2020
124	Design Process: Test - Descore Mechanism	11/12/2020
125	Drive Plan	11/16/2020
126	Design Process: Drive Practice - Day 1	11/16/2020
127	Design Process: Programming - Day 4: Autonomous	11/16/2020
128	Design Process: Programming - Day 5: Autonomous	11/17/2020
129	Design Process: Drive Practice - Day 2	11/19/2020
130	Design Process: Drive Practice - Day 3	11/23/2020
131	Design Process: Build - Day 34: Descore Mechanism	11/24/2020

Team Profile

Emma Meihofer

Age: 17
Grade: 11th
Jobs: Team Leader, Engineering Notebook
Activities: Beta Club, Science Team, Academic Team, National Honor Society, Young Women in Engineering
Hobbies: Piano, Cooking, Gardening, Reading

Alex Daichendt

Age: 16
Grade: 10th
Job: Lead Builder, Driver
Activities: DFHS Swim Team Varsity, Beta Club
Hobbies: Car Enthusiast

Charles Camden Spehl

Age: 16
Grade: 11th
Job: Lead Programmer, Builder, Drive Coach, Web Developer
Activities: Beta Club, National Honor Society
Hobbies: Programming (Java, Python, HTML, CSS, C#, JavaScript), running, fixing phones

Eduardo Cea

Age: 17
Grade 11th
Job: Builder, Programmer, Drive Coach
Activities: National Honor Society, Cea Company Employee
Hobbies: programming (Java, Python, HTML, CSS, C#), Guitar, Trumpet, Saxophone, Bass Guitar, Ukulele, Piano, basketball

Signature: *Emma Meihfoer*		Date: 06/03/2020
Disclosed and Understood by: *Charles Spehl*	Date: 06/03/2020	PROPRIETARY INFORMATION

VEX Change Up Overview

Two Alliances – one “red” and one “blue” – composed of two Teams each, compete in each Match.

The object of the game is to attain a higher score than the opposing Alliance by Scoring Balls and Connecting Rows.

An Autonomous Win Point is awarded to any Alliance that completes a Connected Row using their Alliance Home Row at the end of the Autonomous Period.

A point bonus is awarded to the Alliance that has the most points at the end of the Autonomous Period.

To earn points, a team must build and program a functional robot that picks up balls and scores them into towers. These robots may also have the ability to descore balls of the opposing alliance’s color, in order to eliminate those points for the other team.

More points are awarded when a row of three is made.

Design Process: Challenge - Rules

Safety Rules

1) Be safe out there. If at any time the Robot operation or Team actions are deemed unsafe or have damaged any Field Elements or Game Objects, the offending team may be Disabled and/or Disqualified at the discretion of the Head Referee. The Robot will require re-inspection before it may take the field again.
2) Stay inside the field. If a Robot is completely out-of-bounds (outside the playing field), it will be Disabled for the remainder of the Match.
3) Wear safety glasses. All Drive Team Members must wear safety glasses or glasses with side shields while in the Alliance Stations during Matches. While in the pit area, it is highly recommended that all Team members wear safety glasses.

General Game Rules

1) Treat everyone with respect. All Teams are expected to conduct themselves in a respectful and professional manner while competing in VEX Robotics Competition events. If a Team or any of its members (students or any Adults associated with the Team) are disrespectful or uncivil to event staff, volunteers, or fellow competitors, they may be disqualified from a current or upcoming Match. Team conduct may also impact a Team's eligibility for judged awards. Repeated or extreme violations could result in a Team being Disqualified from an entire event, depending on the severity of the situation.
2) VRC is a student-centered program. Adults may assist students in urgent situations, but Adults may never work on or program a Robot without students on that Team being present and actively participating. Students must be prepared to demonstrate an active understanding of their Robot's construction and programming to judges or event staff.
3) Use common sense. When reading and applying the various rules, remember that common sense always applies in the VEX Robotics Competition.
4) Robots begin the Match in the starting volume. At the beginning of a Match, each Robot must be smaller than a volume of 18" (457.2 mm) long by 18" (457.2 mm) wide by 18" (457.2 mm) tall. Using Field Elements, such as the field perimeter wall, to maintain starting size is only acceptable if the Robot would still satisfy constraints and pass inspection without the Field Element. Robots in violation of this limit will be removed from the field prior to the start of the Match, at the Head Referee's discretion.
5) Keep your Robot together. Robots may not intentionally detach parts during the Match or leave mechanisms on the field.
6) The Robot must represent the skill level of the Team. Each Team must include Drivers, Programmer(s), Designer(s), and Builder(s). No Student may fulfill any of these roles for more than one VEX. Robotics Competition Team in a given competition season. Students may have more than one role on the Team, e.g. the Designer can also be the Builder, the Programmer and a Driver

Signature: Emma Meihfoer		Date: 06/03/2020
Disclosed and Understood by: Charles Spehl	Date: 06/03/2020	PROPRIETARY INFORMATION

Design Process: Challenge - Rules

a) Team members may move from one Team to another for non-strategic reasons outside of the team's control.
b) When a Team qualifies for a Championship event. (e.g., States, Nationals, Worlds, etc.) the Students on the team attending the Championship event are expected to be the same Students on the Team that was awarded the spot. Students can be added as support to the Team, but may not be added as Drivers or Programmers for the team

7) Only Drivers, and only Drive Coaches in the Alliance Station. During a Match, each Team may have up to three (3) Drive team Members in their Alliance Station and all Drive Team Members must remain in their Alliance Station for the duration of the Match. Drive Team Members are not allowed to use any sort of communication devices while in the Alliance Station. Devices with communication features turned off (e.g. a phone in airplane mode) are allowed.
8) Controllers must stay connected to the field towers. Prior to the beginning of each Match, Drive Team Members must play their VEXnet Joystick or V5 Controller into the VEXnet Field Controller's Cat-5 cable via their controller's competition port. This cable must remain plugged in for the duration of the Match, and may not be removed until the "all-clear" has been given for Drive Team Members to retrieve their Robots.
9) Hands out of the field. Drive Team Members may only touch the Team's controls and Robot at specified times during a Match. Drive Team Members are prohibited from making intentional contact with any Game object, Field element, or Robot during a Match, unless specified.
10) Autonomous means "no humans". During the Autonomous Period, Drive Team Members are not permitted to interact with the Robots in any way, directly or indirectly. This could include, but is not limited to:
    - Activating any controls on their VEXnet Joysticks or V5 Controllers
    - Unplugging or otherwise manually interfering with the field connection in any way
    - Triggering sevors in any way, even without touching them
11) All rules still apply in the Autonomous Period. Any infractions committed during the Autonomous Period that are not Match Affecting, but do affect the outcome of the Autonomous Bonus, will result in the Autonomous Bonus being automatically awarded to the opposing Alliance.
12) Don't destroy other Robots. But, be prepared to encounter defense. Strategies aimed solely at the destruction, damage, tipping over, or Entanglement of opposing Robots are not part of the ethos of the VEX Robotics Competition and are not allowed. If the tipping, Entanglement, or damage is ruled to be intentional or egregious, the offending Team may be Disqualified from that Match. Repeated offenses could result in Disqualification from the entirety of the competition.

Signature: Emma Meihfoer		Date: 06/03/2020
Disclosed and Understood by: Charles Spehl	Date: 06/03/2020	PROPRIETARY INFORMATION

Design Process: Challenge - Rules

13) Offensive Robots get the “benefit of the doubt”. In the case where referees are forced to make a judgement call regarding a destructive interaction between a defensive and offensive Robot, or any interaction which results in a questionable rules violation, the referees will err on the side of the offensive Robot.
14) You can’t force an opponent into a penalty. Intentional strategies that cause an opponent to violate a rule are not permitted, and will not result in an infraction on the opposing Alliance. Minor violations of this rule that do not affect the Match will result in a warning. Match Affecting offenses will result in a Disqualification. Teams that receive multiple warnings may also receive a Disqualification at the Head Referee’s discretion.
15) No Trapping for more than five seconds (0:05). A Robot may not Trap an opposing Robot for more than five seconds (0:05) during the Driver Controlled Period. A Trap is officially over once the Trapping Robot has moved away and the Robots are separated by at least two (2) feet (approximately one [1] foam tile). After ending a Trap, a Robot may not Trap the same Robot again for a duration of five seconds (0:05). If a Team does Trap the same Robot again, the count will resume from where it left off when the Trapping Robot initially backed off.
16) Don’t clamp your Robot to the field. Robots may not intentionally grasp, grapple or attach to any Field Elements. Strategies with mechanisms that react against multiple sides of a Field Element in an effort to latch or clamp onto said Field Element are prohibited. The intent of this rule is to prevent Teams from both unintentionally damaging the field and/or from anchoring themselves to the field.
17) Let go of Game Objects after the Match. Robots must be designed to permit easy removal of Balls from any mechanism without requiring the Robot to have power after a Match.
18) It’s not over until it’s over. Scores will be calculated for all Matches immediately after the Match ends, once all Balls, Field Elements, and Robots on the field come to rest.
19) Be prepared for minor field variance. Field Element tolerances may vary from nominal by ±1.0”, unless otherwise specified. Ball tolerances and weights may vary from nominal to ±0.10” and 10 grams respectively. Ball placement at the beginning of Matches may vary from nominal to ±1.5”. The bottom opening of Goals between the lowest two rings has a dimensional tolerance of -0.0 / +0.5”. Teams are encouraged to design their Robots accordingly. Please make sure to check Appendix A for more specific nominal dimensions and tolerances.
20) Match Replays are allowed, but rare. Match Replays, i.e. playing a match over again from its start, are at the discretion of the Event Partner and Head Referee, and will only be issued in the most extreme circumstances listed but not limited to the following:
    a) Field Fault issues that have directly affected Match play.
    b) Game Rule issues that affect the outcome of a match.

Design Process: Challenge - Rules

Specific Game Rules

1) Starting a Match. Prior to the start of each Match, the Robot must be placed such that it is:
    a) Contacting its Home Zone.
    b) Not contacting the gray foam field tiles outside of the Alliance's Home Zone.
    c) Not contacting any Balls other than the Preload.
    d) Not contacting another Robot.
    e) Contacting exactly one (1) Preload.
2) Stay on your side in Autonomous. During the Autonomous Period, Robots may not contact the foam tiles or Balls which are on the opposing Alliance's side of the Autonomous Line. Robots may not contact the Goals that are in the opposing Alliance's Home Zone.
3) Keep Balls on your side in Autonomous. Balls that start fully on one side of the Autonomous Line may not contact the foam tiles on the opposite side of the Autonomous Line during the Autonomous Period.
4) Keep Game Objects to yourself. Robots may not intentionally drop or place Game Objects on an opponent Robot.
5) Balls may not be de-scored from the top of Goals. Balls that are Scored may not be lifted by any means such that the Ball goes above the top edge of the Goal.
6) Keep Balls in the field. Teams may not intentionally remove Balls from the field. While Balls may accidentally leave the field when attempting to Score, doing so intentionally or repeatedly would be a violation of this rule. Balls that leave the field during Match play, intentionally or unintentionally, will be returned to the field at the location nearest the point at which they exited. Referees will return the Balls to the field when it is deemed safe to do so, at the leisure of the referee.
7) Use Balls to play the game. Balls may not be used to accomplish actions that would be otherwise illegal if they were attempted by Robot mechanisms (e.g., Interfering with an opponent's Autonomous Period)
8) Possession is limited. Robots may not have greater-than-momentary Possession of more than three (3) Balls of its opposing Alliance's color at once. When two Robots from the same Alliance are working in tandem and blocking Balls, those Robots may not possess a total of more than six (6) Balls of its opposing Alliance's color at once.

Inspection Rules

1) One Robot per Team. Only one (1) Robot will be allowed to compete per Team in the VEX Robotics Competition. Though it is expected that Teams will make changes to their Robot at the competition, a Team is limited to only one (1) Robot. As such, a VEX Robot, for the purposes of the VEX Robotics Competition, has the following subsystems:

Design Process: Challenge - Rules

   a) Subsystem 1: Mobile robotic base including wheels, tracks, legs, or any other mechanism that allows the Robot to navigate the majority of the flat playing field surface. For a stationary Robot, the robotic base without wheels would be considered Subsystem 1.
   b) Subsystem 2: Power and control system that includes a legal VEX battery, a legal VEX control system, and associated motors for the mobile robotic base.
   c) Subsystem 3: Additional mechanisms (and associated motors) that allow manipulation of game objects or navigation of field obstacles.
2) Robots must be a representation of the skill level of the team. The Robot must be designed, built and programmed by members of the Team. Adults are permitted to mentor and teach design, building and programming skills to the Students on the Team, but may not design, build or program that team's Robot.
3) Robots must pass inspection. Every Robot will be required to pass a full inspection before being cleared to compete. This inspection will ensure that all robot rules and regulations are met. Initial inspections will take place during team registration/practice time.
4) Robots must be safe. The following types of mechanisms and components are NOT allowed:
   a) Those that could potentially damage Field Elements or Balls.
   b) Those that could potentially damage other competing Robots.
   c) Those that pose an unnecessary risk of Entanglement
5) Robots must fit in a sizing box. At the beginning of any Match, Robots must be smaller than 18" (457.2 mm) long by 18" (457.2 mm) wide by 18" (457.2 mm) tall.
6) Robots are built from the VEX V5 or Cortex system. Robots may be built ONLY using official VEX V5 and Cortex components, unless otherwise specifically noted within these rules. Teams are responsible for providing documentation proving a part's legality in the event of a question. Examples of documentation include receipts, part numbers, official VEX websites, or other printed documentation.
7) VEX products come from VEX Robotics or VEX Robotics Resellers. Official VEX products are ONLY available from VEX Robotics & official VEX Resellers. To determine whether a product is "official" or not, consult www.vexrobotics.com. A complete list of authorized VEX Resellers can be found at https://www.vexrobotics.com/how-to-order
8) Certain non-VEX components are allowed. Robots are allowed the following additional "nonVEX" components:
   a) Any material strictly used as a color filter or marker for a VEX Light Sensor.
   b) Any non-aerosol based grease or lubricating compound, when used in extreme moderation on surfaces and locations that do NOT contact the playing field walls, foam field surface, Balls, or other Robots.

Design Process: Challenge - Rules

c) Anti-static compound, when used in extreme moderation (i.e. such that it does not leave residue on playing field walls, the foam field surface, Balls, or other Robots).
d) Hot glue when used to secure cable connections.
e) An unlimited amount of 1/8” (or local metric equivalent), braided, nylon rope.
f) Commercially available items used solely for bundling or wrapping of 2-wire, 3-wire, 4-wire, or V5 Smart Cables, and pneumatic tubing are allowed. These items must solely be used for the purposes of cable protection, organization, or management. This includes but is not limited to electrical tape, cable carrier, cable track, etc. It is up to inspectors to determine whether a component is serving a function beyond protecting and managing cables.

9) Give the radio some space. The V5 Radio or VEXnet Key 2.0 must be mounted such that no metal surrounds the radio symbol on the V5 Radio or touches the VEXnet logo on the VEXnet Key 2.0.
10) A limited amount of custom plastic is allowed. Robots may use non-shattering plastic from the following list; polycarbonate (Lexan), acetal monopolymer (Delrin), acetal copolymer (Acetron GP), POM (acetal), ABS, PEEK, PET, HDPE, LDPE, Nylon (all grades), Polypropylene, FEP; as cut from a single 12” x 24” sheet up to 0.070” thick.
11) A limited amount of tape is allowed. Robots may use a small amount of tape when used for the following purposes:
    a) For the purpose of securing connections between the ends of two VEX cables.
    b) For labeling wires and motors.
    c) For covering the back of License Plates (i.e. the “wrong color”).
    d) For the purposes of preventing leaks on the threaded portions of pneumatic fittings. This is the only acceptable use of Teflon tape.
    e) For securing and retaining a VEXnet Key 2.0 to the VEX ARM® Cortex®-based Microcontroller. Using tape in this manner is highly recommended to ensure a robust connection.
    f) In any other application that would be considered a “non-functional decoration”
12) Certain non-VEX screws, nuts, and washers are allowed. Robots may use any commercially available #4, #6, #8, M3, M3.5, or M4 screw up to 2” (50.8mm) long (nominal), and any commercially available nut, washer, and/or spacer (up to 2” / 50.8mm long) to fit these screws.
13) Decorations are allowed. Teams may add non-functional decorations, provided that they do not affect Robot performance in any significant way or affect the outcome of the Match. These decorations must be in the spirit of the competition. Inspectors will have final say in what is considered “non-functional”. Unless otherwise specified below, non-functional decorations are governed by all standard Robot rules

Design Process: Challenge - Rules

14) No Wi-Fi. The Vision Sensor must have its wireless transmitting functionality disabled.
15) New VEX parts are legal. Additional VEX components released during the competition season on www.vexrobotics.com are considered legal for use.
16) Robots have one microcontroller. Robots must ONLY use one (1) VEX V5 Robot Brain (276- 4810), or one (1) VEX ARM ® Cortex ®-based Microcontroller (276-2194).
17) Robots use VEXnet. Robots must ONLY utilize the VEXnet system for all Robot communication.
18) Robots use one control system. Robots may use exactly one (1) of the following four (4) options:
    a) Option 1: A VEX ARM® Cortex®-based Microcontroller, up to ten (10) 2-Wire Motors or VEX Servos (in any combination up to ten) and a legal VRC pneumatic system.
    b) Option 2: A VEX ARM® Cortex®-based Microcontroller, up to twelve (12) 2-Wire Motors or VEX Servos (in any combination up to twelve) and no pneumatic components, excluding pneumatic tubing.
    c) Option 3: A V5 Robot Brain, up to six (6) V5 Smart Motors, and a legal VRC pneumatic system.
    d) Option 4: A V5 Robot Brain, up to eight (8) V5 Smart Motors, and no pneumatic components, excluding pneumatic tubing.
19) One motor or Y cable per motor port. If using a VEX ARM® Cortex®-based Microcontroller, a maximum of one (1) VEX Y-cable can be used per Motor Port of the Microcontroller or Power Expander, i.e. you cannot “Y off a Y” to have more than two (2) motors controlled by the same Motor Port.
20) Electrical power comes from VEX batteries only. The only allowable source(s) of electrical power are as follows:
    a) If using a VEX ARM® Cortex®-based Microcontroller, robots may use (1) VEX 7.2V Robot Battery Pack of any type.
    b) If using a V5 Robot Brain, robots may use (1) V5 Robot Battery (276-4811).
    c) Teams are permitted to have an external power source (such as a rechargeable battery pack) plugged into their V5 Controller during a Match, provided that this power source is connected safely and does not violate any other rules
21) One or two controllers per Robot. No more than two (2) VEX wireless remotes may control a single Robot during the tournament.
22) No modifications to electronic components are allowed. Motors (including the internal PTC or Smart Motor firmware), microcontrollers (including V5 Robot Brain firmware), extension cords, sensors, controllers, battery packs, reservoirs, solenoids, pneumatic cylinders, and any other electrical component or pneumatics component of the VEX platform may NOT be altered from their original state in ANY way.

Signature: Emma Meihfoer		Date: 06/03/2020
Disclosed and Understood by: Charles Spehl	Date: 06/03/2020	PROPRIETARY INFORMATION

Design Process: Challenge - Rules

23) Most modifications and repairs to non-electrical components are allowed. Physical modifications such as bending or cutting are permitted and may be done to legal VEX Robotics Competition metal structure or plastic components.
24) Custom V5 Smart Cables are allowed. Teams must use official V5 Smart Cable Stock but may use commodity 4P4C connectors and 4P4C crimping tools. Teams who create custom cables acknowledge that incorrect wiring may have undesired results.
25) Keep the power switch accessible. The Robot on/off switch or button must be accessible without moving or lifting the Robot. All microcontroller lights and/or screens must also be easily visible by competition personnel to assist in diagnosing Robot problems.
26) Pneumatics are limited. Pneumatic devices may only be charged to a maximum of 100 psi. Teams may only use a maximum of two VEX pneumatic air reservoirs on a Robot.
27) Only registered Teams may compete in the VEX Robotics Competition. To participate in an official VEX Robotics Competition (VRC) event, a Team must first register on robotevents.com. Upon registering they will receive their VRC Team Number and four (4) VRC License Plates. Teams may choose to use the VRC License Plate Kit that comes in the VRC Team Welcome Kit, or may create their own, including one made from 3D printed parts.
28) Use the “Competition Template” for programming. The Robots must be programmed to follow control directions provided by the VEXnet Field Controllers.
29) There is a difference between accidentally and willfully violating a Robot rule. Any violation of Robot rules will result in a Team being unable to play until they pass inspection (per). In addition, Teams who intentionally or knowingly circumvent or violate rules to gain an advantage over their fellow competitors are in violation of the spirit and ethos of the competition. Any violation of this sort may be considered a violation of and/or the REC Foundation Code of Conduct.
30) Special event modifications. Some events may choose to make the following rule exceptions to fit their unique circumstances:
    a) Utilize the VEX 75 MHz Crystal Radio Transmitter & Receiver instead of or in conjunction with the VEXnet Wireless link.
    b) Allow AA batteries to power the robot instead of a VEX 7.2V Battery Pack.

<u>Tournament Rules</u>

1) The Head Referee has ultimate authority on ruling decisions during the competition.
2) The Drive Team is permitted to immediately appeal the Head Referee’s ruling. If the Drivers wish to dispute a score or ruling, those Drivers must stay in the Alliance Station until the Head Referee talks with them. Once the Head Referee announces that his or her decision has been made final, the issue is over and no more appeals may be made. The Event Partner may not overrule the Head Referee’s decision.

Signature: Emma Meihfoer		Date: 06/03/2020
Disclosed and Understood by: Charles Spehl	Date: 06/03/2020	PROPRIETARY INFORMATION

Design Process: Challenge - Rules

3) The Team's Robot or a Drive Team Member should attend every Match. A Robot or a Student member of the Team must report to the field for the Team's assigned Match. If no Student Team members report to the field, the Team will be considered a "no-show" and receive zero (0) Win Points, Autonomous Points, and Strength of Schedule Points.
4) Robots at the field must be ready to play. Teams must bring their Robots to the field prepared to play. Teams who use VEX pneumatics must have their systems charged before they place the Robot on the field.
5) Practice Matches may be run at some events. If Practice Matches are run, they will be conducted on a first-come, first-served basis with every effort made to equalize practice match time for all Teams.
6) The red alliance, or the highest seed, places last. In Qualification Matches, the red Alliance has the right to place its Robots on the field last. In Elimination Matches, the higher (better) seeded Alliance has the right to place its Robots on the field last. Once a Team has placed its Robot on the field, its position cannot be readjusted prior to the Match. If a Team violates this rule, the opposing Alliance will be given the opportunity to reposition their Robots promptly.
7) Qualification Matches follow the Qualification Match schedule. A Qualification Match schedule will be available on the day of competition. The Qualification Match schedule will indicate Alliance partners, Match pairings, and Alliance color. For tournaments with multiple fields, the schedule will indicate which field the Match will take place on.
8) Each Team will be scheduled Qualification Matches as follows.
    a) When in a tournament, it must have a minimum of four Qualification Matches per Team. The suggested amount of Qualification Matches per Team for a standard tournament is six and up to ten for a championship event.
    b) When in a league, there must be at least three (3) league ranking sessions and each session must have a minimum of two (2) Qualification Matches per Team. The suggested amount of Qualification Matches per Team for a standard league ranking session is four (4). Leagues will have a league finals session where elimination rounds will be played. Event Partners may choose to have Qualification Matches as part of their league finals session.
9) Team rankings are determined during Qualification Matches as outlined below.
    a) When in a tournament, every Team will be ranked based on the same number of Qualification Matches.
    b) When in a league, every Team will be ranked based on the number of Matches played. Teams that participate in at least 60% of the total Matches available will be ranked above Teams that participate in less than 60% of the total Matches available. Being a no-show to a match that a Team is scheduled in still constitutes participation for these calculations.

Design Process: Challenge - Rules

c) In some cases, a Team will be asked to play an additional Qualification Match. The extra Match will be identified on the Match Schedule with an asterisk and will not impact the Team's ranking, Win Points, Autonomous Points or Strength of Schedule Points for that Qualification Match (and will not affect participation percentage for leagues).

10) Qualification Match tiebreakers. Team rankings are determined throughout Qualification Matches as follows:
    a) Average Win Points (Win Points / Number of Matches played)
    b) Average Autonomous Points (Autonomous Points / Number of Matches played)
    c) Average Strength of Schedule Points (Strength of Schedule Points / Number of Matches played)
    d) Highest Match score
    e) Second highest Match score
    f) Random electronic draw
11) Disqualifications. When a Team is DQ in a Qualification Match, they receive zero Win Points, Autonomous Win Point, Autonomous Points, and Strength of Schedule Points.
12) Send a Team Representative to Alliance Selection. Each Team must send one (1) Team Representative to the playing field for Alliance Selection. If the Team Representative fails to report to the playing field for Alliance Selection, their Team will be ineligible for participation in the Alliance Selection process.
13) Each Team may only be invited once to join an Alliance. If a Team Representative declines an Alliance Captain's invitation during Alliance Selection, that Team is no longer eligible to be selected by another Alliance Captain. However, they are still eligible to play Elimination Matches as an Alliance Captain.
14) Each Alliance gets one Timeout. Each Alliance may request one (1) Time Out during the elimination Bracket between Elimination Matches, as permitted by the Head Referee and Event Partner. Alliances may not use their Time Outs during a Match.
15) Elimination Matches are a blend of "Best of 1" and "Best of 3".
16) Small tournaments may have fewer Alliances. Events with 32 or more teams must use 16-team alliances when starting Elimination Matches. Events with fewer than 32 Teams (i.e. the requisite amount for sixteen full Alliances) must limit the number of Alliances by dividing the number of Teams by two, less any remainder.
17) Fields may be raised or on the floor. Some tournaments may choose to place the playing field on the floor, or elevated off the floor (common heights are 12" to 24" [30.5cm to 61cm]). No Drive Team Members may stand on any sort of object during a Match, regardless of whether the field is on the floor or elevated.
18) Students must be accompanied by an Adult. - No Student may attend a VRC event without a responsible Adult supervising them.

Design Process: Challenge - Rules

Live Remote Tournament Game Rules

1) The following rules from the Robot Skills Challenge Appendix, pertaining to a Remote Skills-Only event, also apply to Live Remote Tournaments events:
    a) An Adult Team contact must be present in all Matches.
    b) Teams will complete a full Robot inspection in accordance with <R3>.
    c) All Team camera footage must be streamed live, from one camera feed, with no "cuts".
    d) A Team's camera must be placed on the "audience side" of the field, i.e. the Red Alliance Station on the left side of the screen.
    e) Matches must include some live interaction between the Team and the Head Referee.
    f) Match replays are at the discretion of the Head Referee.
2) During a Live Remote Tournament Match, Drive Team Members must still stand in the Alliance Station associated with their Alliance color.
3) During a Live Remote Tournament Match, a Drive Team Member's V5 Controller must be plugged into the computer being used for the remote competition interface via a USB cable for the duration of the Match.
4) Balls that leave the field during Match play, intentionally or unintentionally, will not be returned to the field. Intentionally, strategically, or repeatedly removing Balls from the field may still be considered a violation at the Head Referee's discretion.
5) There is no limit to the number of Balls, of either color, that a Team may Possess at any given time.
6) If a Goal is being contacted by a Robot at the end of a Match, then it is considered Doubled.
7) In a Live Remote Tournament Match, Teams must set up their own field in accordance with the layouts, tolerances, and specifications found in the Game Manual and Appendix A.
8) In a VEX U Live Remote Match, each Team plays with two Robots. The two Robots play on one field at the same time. Each Alliance is still made up of two Teams. Therefore, there are eight Robots, four Teams, and four fields in each Match.

Signature: Emma Meihfoer		Date: 06/06/2020
Disclosed and Understood by: Charles Spehl	Date: 06/06/2020	PROPRIETARY INFORMATION

Design Process: Challenge - Field

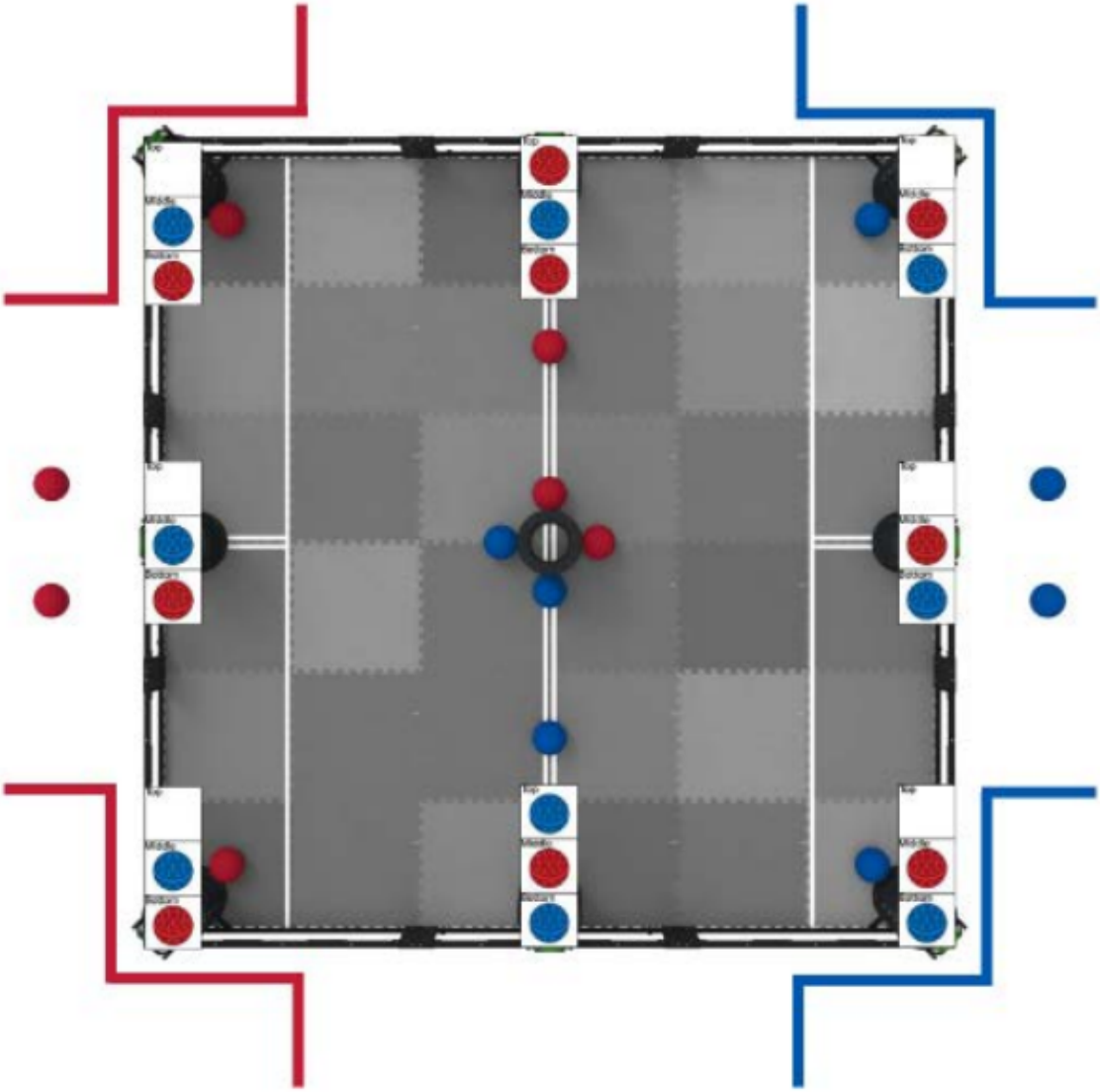

The image above depicts the set up of the field for a live game before the match has started. The three boxes over each goal depicts the color of balls that are stacked in each goal and the order these balls are stacked in. The two balls outside of the field on each side are the pre-loads given for each team. The red and blue tape along the outside of the field designates the areas in which the alliance teams can stand while driving their robot.

Signature: Emma Meihfoer		Date: 06/06/2020
Disclosed and Understood by: Charles Spehl	Date: 06/06/2020	PROPRIETARY INFORMATION

Design Process: Challenge - Field Specifications

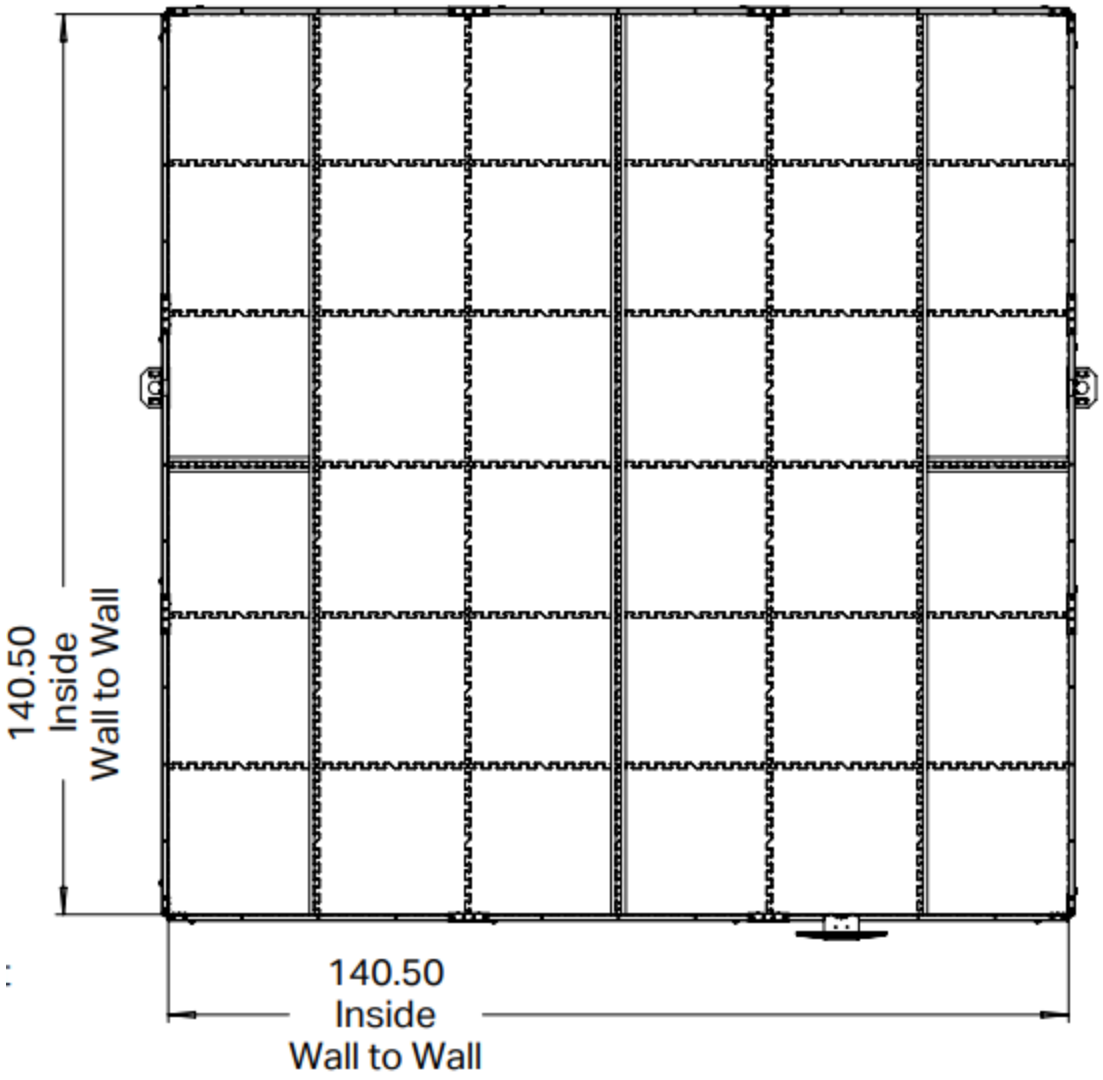

This is the dimensions of the whole field, including the tile mats.

Signature: Emma Meihfoer		Date: 06/06/2020
Disclosed and Understood by: Charles Spehl	Date: 06/06/2020	PROPRIETARY INFORMATION

Design Process: Challenge - Field Specifications

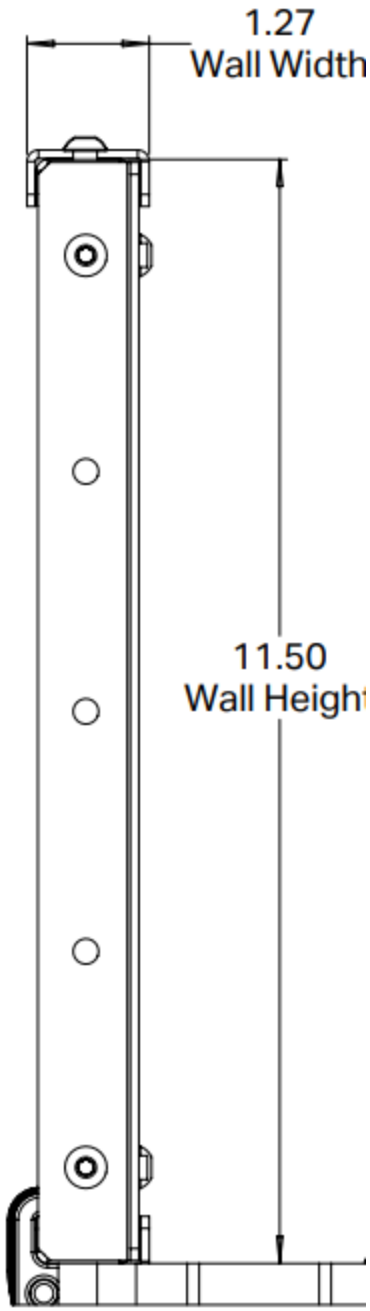

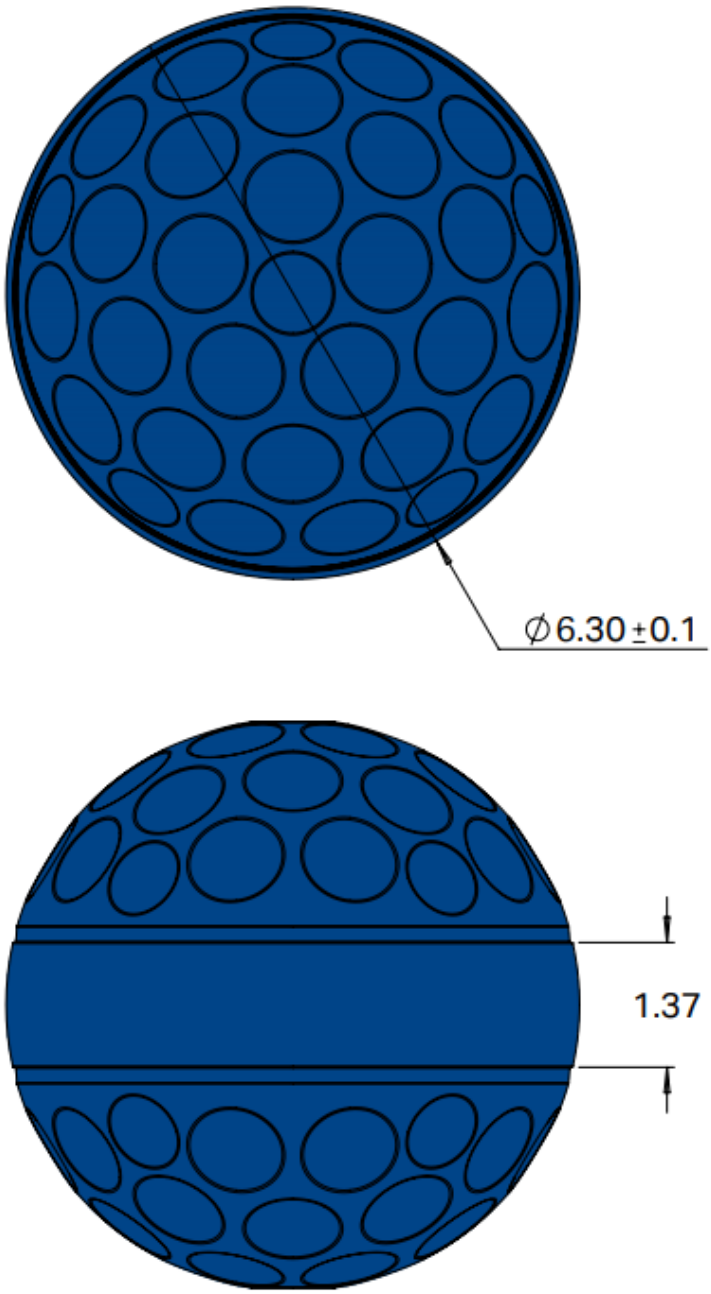

The image to the left are the dimensions of the walls of the field. The image to the right is of the dimensions of the balls used in the game. The balls have a mass of 168 ± 10 grams.

Signature: *Emma Meihfoer*		Date: 06/06/2020
Disclosed and Understood by: *Charles Spehl*	Date: 06/06/2020	PROPRIETARY INFORMATION

Design Process: Challenge - Field Specifications

Wall Goal Specs:

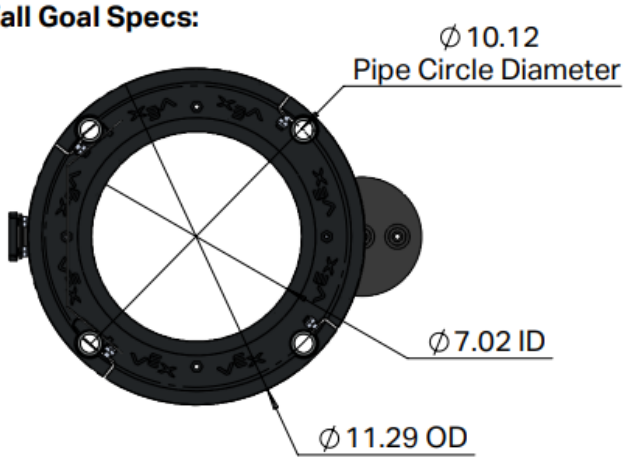

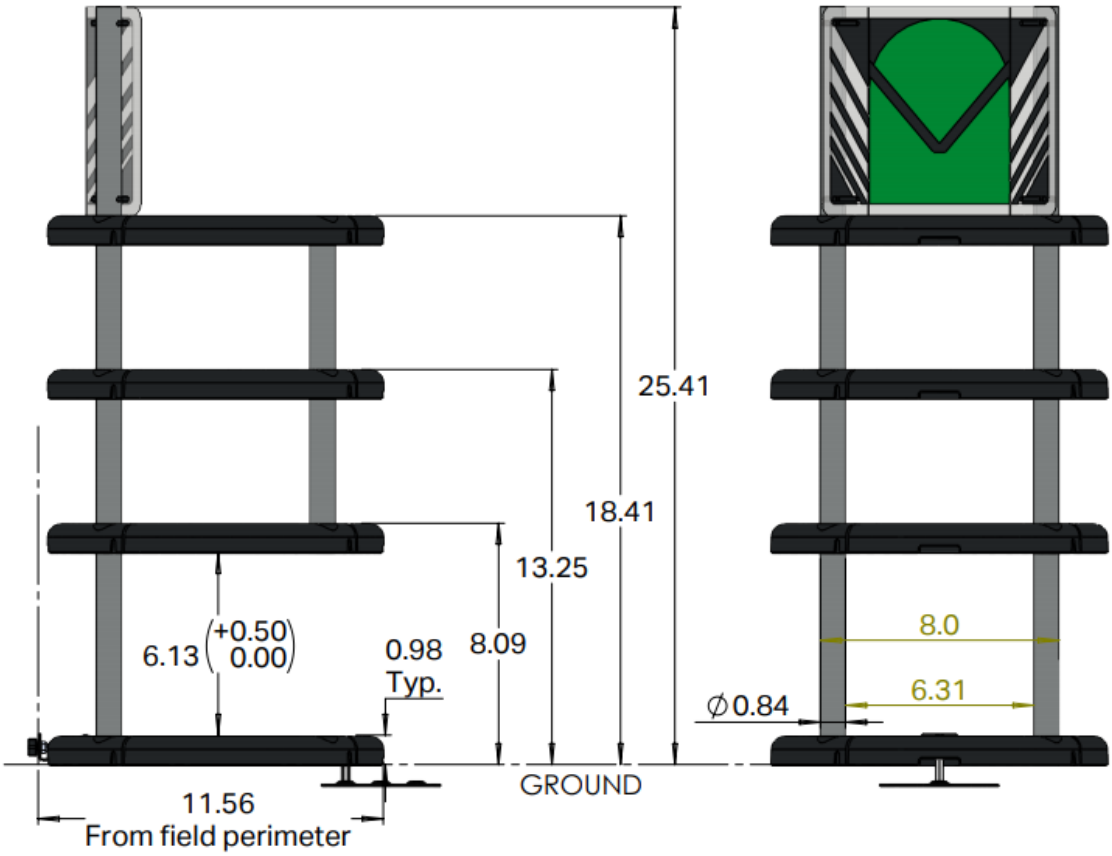

The image above designates the dimensions of the goals located in the middle of the sides of the field.

Signature: Emma Meihfoer		Date: 06/06/2020
Disclosed and Understood by: Charles Spehl	Date: 06/06/2020	PROPRIETARY INFORMATION

Design Process: Challenge - Field Specifications

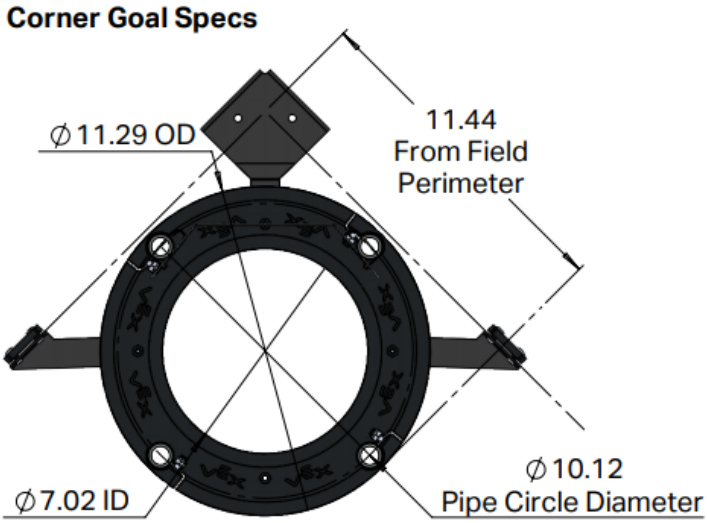

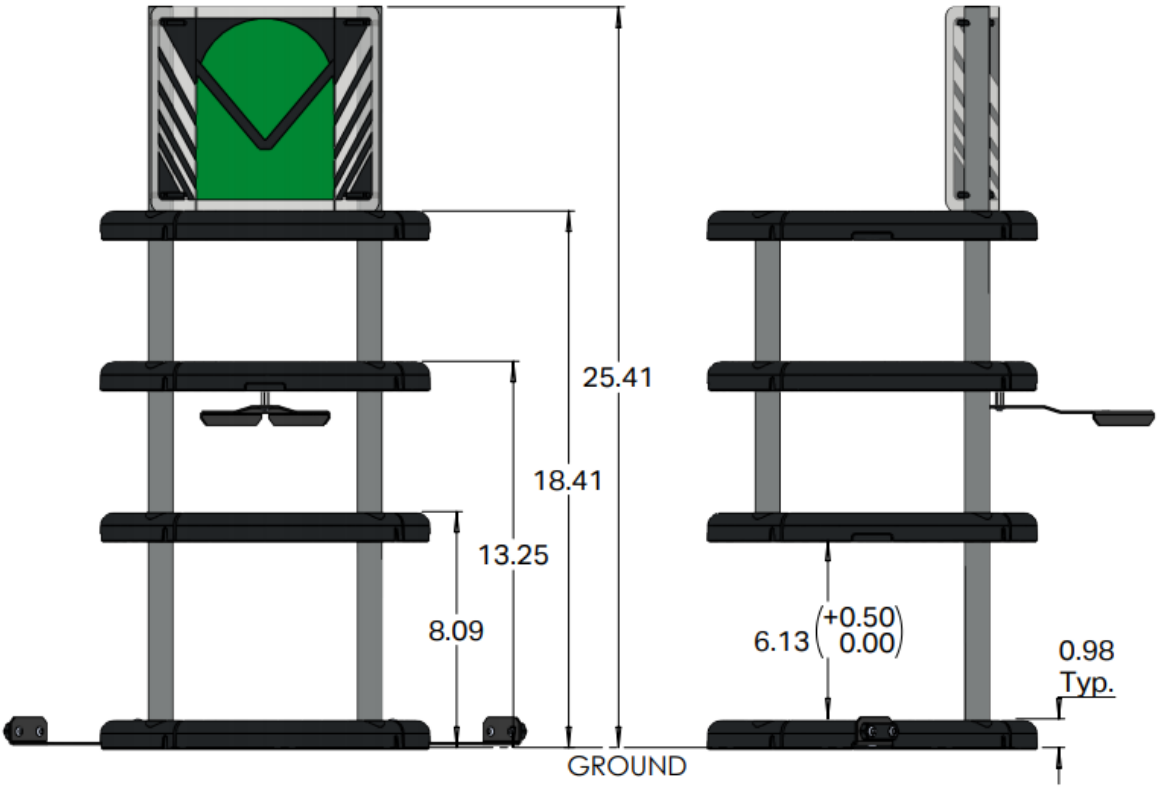

The image above designates the dimensions of the goals located in the corner of the field.

Signature: Emma Meihfoer		Date: 06/06/2020
Disclosed and Understood by: Charles Spehl	Date: 06/06/2020	PROPRIETARY INFORMATION

Design Process: Challenge - Field Specifications

Middle Goal Specs:

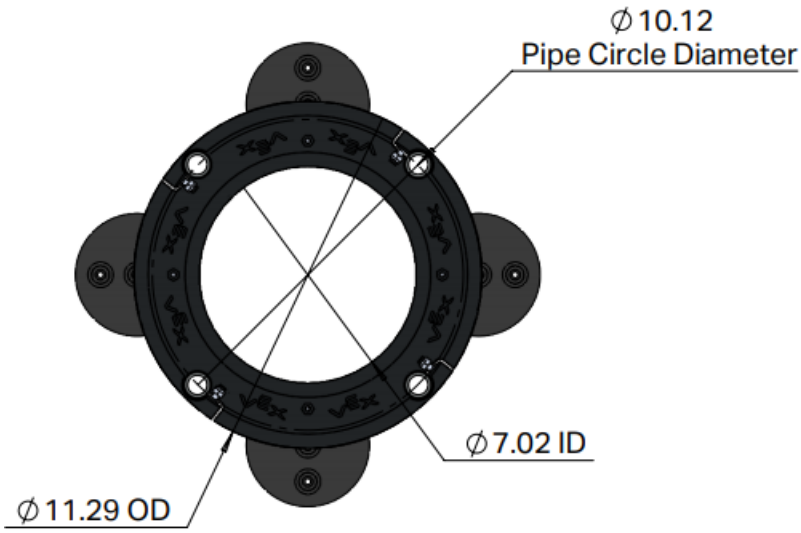

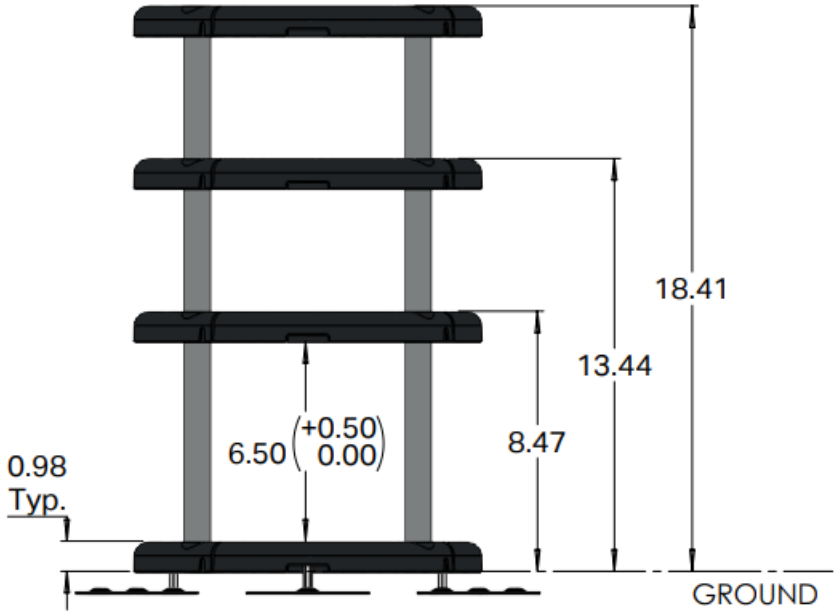

The image above designates the dimensions of the goal located in the center of the field.

Signature: *Emma Meihfoer*		Date: 06/06/2020
Disclosed and Understood by: *Charles Spehl*	Date: 06/06/2020	PROPRIETARY INFORMATION

Design Process: Challenge - Field Specifications

Field Reference Specs

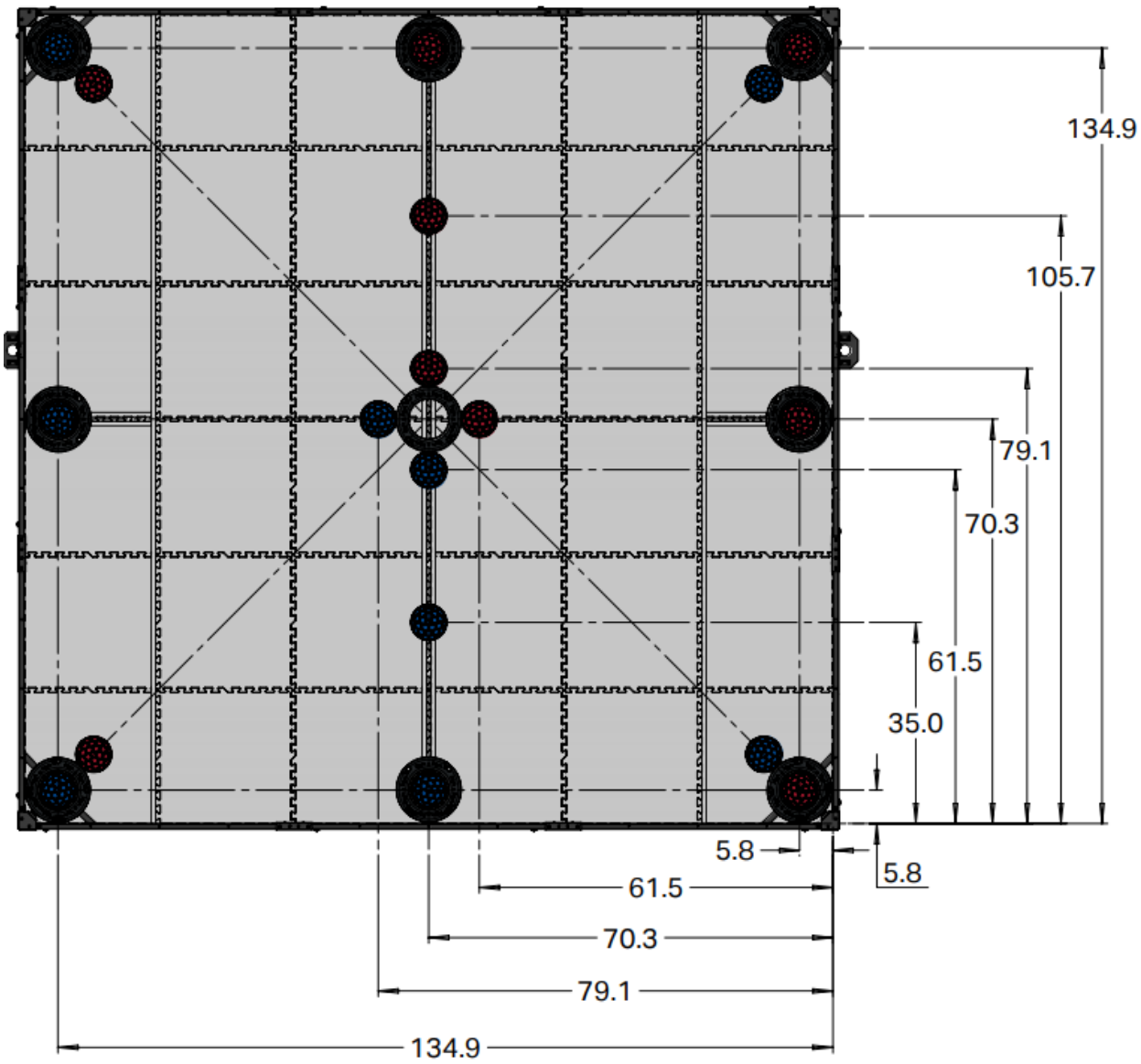

The image above provides the reference points and dimensions between each of the goals around the field. The image also provides reference points and dimensions between the goals and balls.

Signature: *Emma Meihfoer*		Date: 06/06/2020
Disclosed and Understood by: *Charles Spehl*	Date: 06/06/2020	PROPRIETARY INFORMATION

Design Process: Challenge - Skills Rules

Robot Skills Challenge Rules

1) Robots may start the Robot Skills Match in either Home Zone with the Drive Team Members standing in the Alliance Station that corresponds with that Home Zone.
2) In Robot Skills Matches, Teams play as if they are on the red Alliance Scoring only red Balls and Owning only red Goals
3) Rules <SG2> and <SG3> do not apply in Programming Skills Matches.

Remote Skills-Only Event Rules

1) The Remote Skills Only environment (i.e. digital platform) may be chosen at Event Partner discretion.
2) Registered Teams will be assigned scheduled times to complete Robot Inspection and up to (3) Programming Skills Matches and (3) Driving Skills Matches over a live, online environment.
3) The minimum event staff must include one (1) Event Partner and at least one (1) certified Head Referee. A dedicated Tournament Manager operator is also recommended, but not required, if the Head Referee and/or Event Partner wish to fulfill this role.
4) At all times, there must be a minimum of (2) Adults over the age of 18 in the remote meeting environment before Students are allowed to connect. One of those Adults must be the Event Partner.
5) The Team's Primary Contact, or another designated Adult Team contact (over the age of 18), must be present in the remote meeting environment throughout the duration of the scheduled time for that Team. The Team's Primary Contact will be responsible for providing the Adult representative's contact information to the Event Partner prior to the event.
6) Teams will complete a full Robot inspection live with the Head Referee prior to their first Robot Skills Match. This inspection process should follow the checklist on a standard inspection sheet, including a demonstration of sizing compliance.
7) All Team camera footage must be streamed live, from one camera feed, with no "cuts".
8) Live, Remote Robot Skills Matches must include some live interaction between the Team and the Head Referee.
9) Match replays are at the discretion of the Head Referee. In addition, live video circumstances (such as a video cutting out, or a Match timing error) could warrant a Match replay at the Head Referee's discretion.
10) Any violation of any rules will result in the Match score being recorded as zero. That Match will count as one of the Team's allotted Matches.

Signature: Emma Meihfoer		Date: 06/06/2020
Disclosed and Understood by: Charles Spehl	Date: 06/06/2020	PROPRIETARY INFORMATION

Design Process: Challenge - Skills Field Sketch

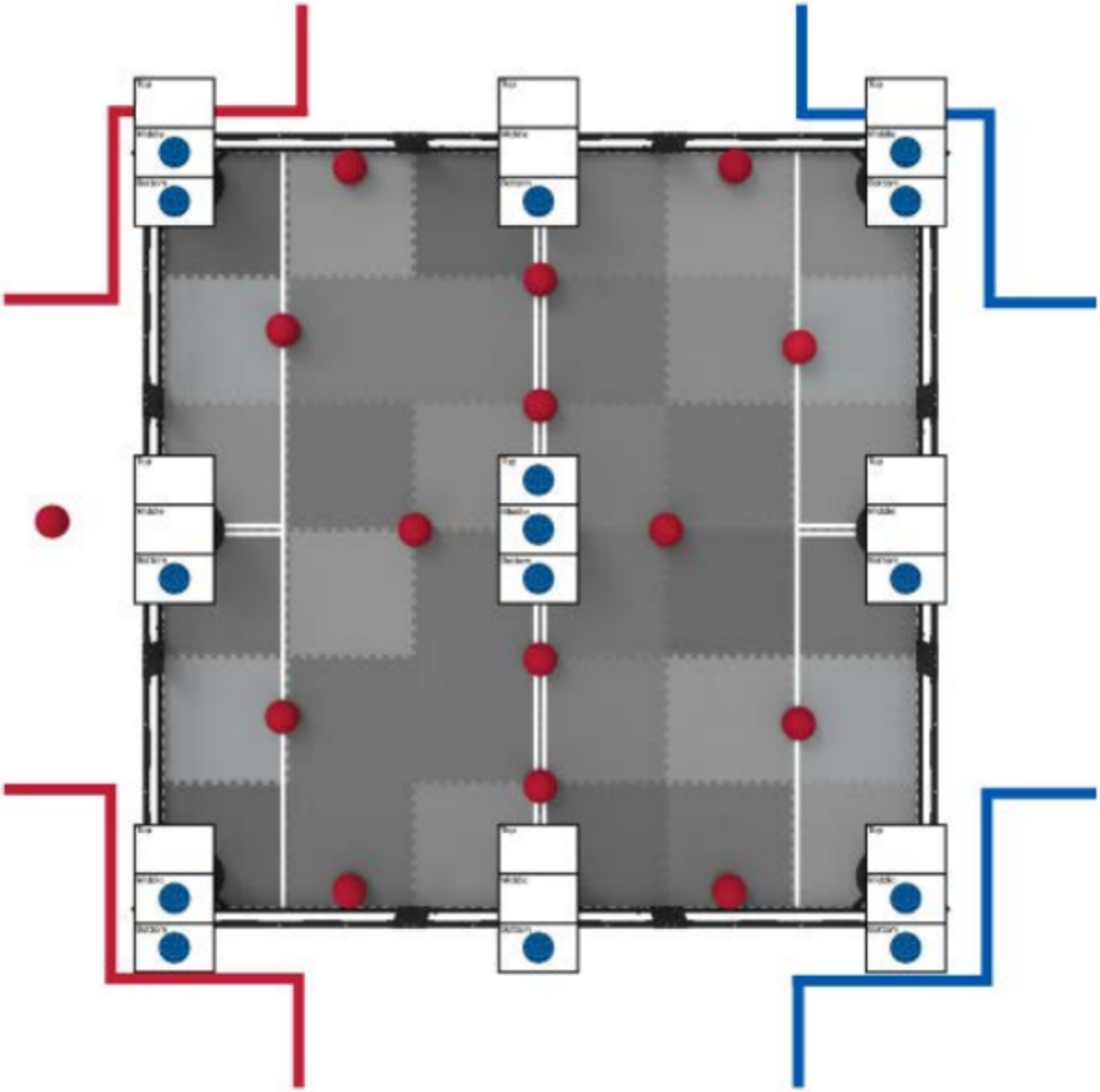

Signature: Emma Meihfoer		Date: 06/10/2020
Disclosed and Understood by: Charles Spehl	Date: 06/10/2020	PROPRIETARY INFORMATION

Design Process: Challenge - Scoring

Game Scoring

- A Ball Scored in a Goal is worth one (1) point for the Alliance of the color of the Ball.
- A Connected Row is worth six (6) points for that Alliance.
- The winner of the Autonomous Bonus receives a six (6) point bonus. In the case of a tie, both Alliances receive a three (3) point bonus.

Robot Skills Challenge Scoring

- Teams receive points according to the same Scoring rules in VEX Robotics Competition Change Up when Scoring for the red Alliance.
- Additionally, Teams receive points for any blue Balls that are removed from their starting positions in Goals. These points are equal to how many points would have been "de-scored" from the blue Alliance by removing that Ball.
- To calculate this, all Balls will be scored at the end of a Robot Skills Match for their respective Alliance, with the same scoring rules as a standard VRC Change Up Match. The Team's Robot Skills Match score will then be calculated as follows:
- (Red Alliance Score) - (Blue Alliance Score) + 63

Signature: Emma Meihfoer		Date: 06/10/2020
Disclosed and Understood by: Charles Spehl	Date: 06/10/2020	PROPRIETARY INFORMATION

Season Schedule Breakdown

	June	July	August
Chassis			
Ball Intake			
Ball Launcher			
Test and Redesign			
Drive Practice/Autonomous			

	September	October	November
Chassis			
Ball Intake			
Ball Launcher			
Test and Redesign			
Drive Practice/Autonomous			

	December	January	February
Chassis			
Ball Intake			
Ball Launcher			
Test and Redesign			
Drive Practice/Autonomous			

	March	April
Chassis		
Ball Intake		
Ball Launcher		
Test and Redesign		
Drive Practice/Autonomous		

Signature: Emma Meihfoer		Date: 06/10/2020
Disclosed and Understood by: Charles Spehl	Date: 06/10/2020	PROPRIETARY INFORMATION

June Schedule Breakdown

	June														
	1	2	3	4	5	6	7	8	9	10	11	12	13	14	15
Design															
Chassis															
Chassis Test															
Chassis Redesign															
Ball Intake															
Ball Intake Test															
Ball Intake Redesign															
	16	17	18	19	20	21	22	23	24	25	26	27	28	29	30
Design															
Chassis															
Chassis Test															
Chassis Redesign															
Ball Intake															
Ball Intake Test															
Ball Intake Redesign															

Signature: Emma Meihfoer		Date: 06/10/2020
Disclosed and Understood by: Charles Spehl	Date: 06/10/2020	PROPRIETARY INFORMATION

Game Goals

With this competition, our goal is to score as many points as possible.

In order to score points, we will focus on the engineering design process. A large amount of effort will go into coming up with a variety of designs for different parts of the robot. We will consider as many factors as possible before deciding on a certain design.

In order to have the opportunity and time to test, redesign, and rebuild the faulty components of the robot, we have requested to collect the robotics parts today. This will provide us with the chance to work on the robot over the summer, instead of starting during the school year. That is an additional 3 months of work time.

In order to score as many points as possible or more points than our opponents, we will focus the robot on picking up and scoring balls. Descoring the balls will be decided at a later time, after we have determined an effective way to score balls.

Not only do we have the goal to win, but we are looking to improve our skills through completing our tasks. Some students in our team are looking to learn a new programming language and improve their existing programming skills. Other students are looking to improve their building skills by becoming quicker and more efficient with assembling parts. Furthermore, other students are looking to develop more engineering skills.

We’re looking to minimize the cost of our robot by using parts we already have, in addition to efficiently working to make the best use of our time.

Signature: Emma Meihfoer		Date: 06/12/2020
Disclosed and Understood by: Charles Spehl	Date: 06/12/2020	PROPRIETARY INFORMATION

Design Process: Brainstorm - Concepts

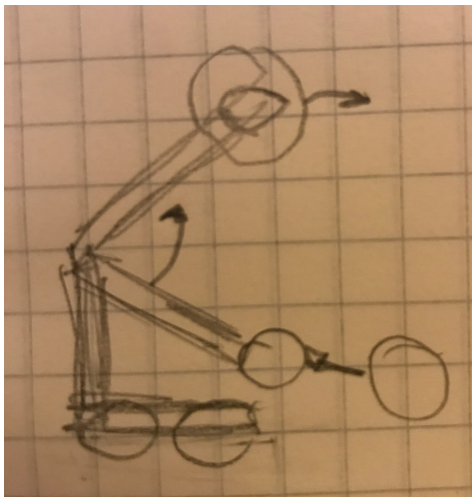

This concept is the idea of having an arm lift that picks up the ball and brings it up to the top of the goal, where it will drop it.

This design will require more precision on the driver's side and will limit the number of balls we will be able to pick up

This concept design is nicknamed the "banana". It is the idea of picking up the ball with rollers or tread and shooting it out the top with an aimer/hood to guide the ball forward, rather than straight up.

This design will allow the robot to carry multiple balls at a time. There are height concerns associated with this design.

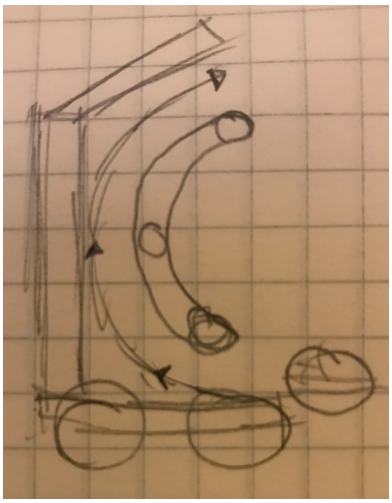

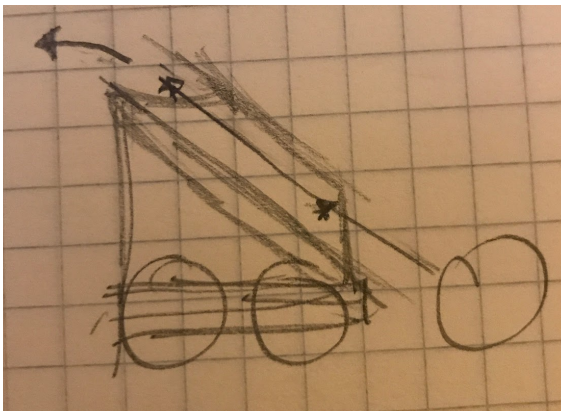

This concept design is the idea of having an intake device pull the ball into a ramp, where it will go up the robot and be dumped out the back end, into the goals.

This design will allow multiple balls to be picked up by the robot. The robot may have a hard time keeping the balls inside the ramp and carrying it since they are balls instead of cubes.

Signature: Emma Meihfoer		Date: 06/12/2020
Disclosed and Understood by: Charles Spehl	Date: 06/12/2020	PROPRIETARY INFORMATION

Design Process: Brainstorm - Chassis Design One

X-Drive

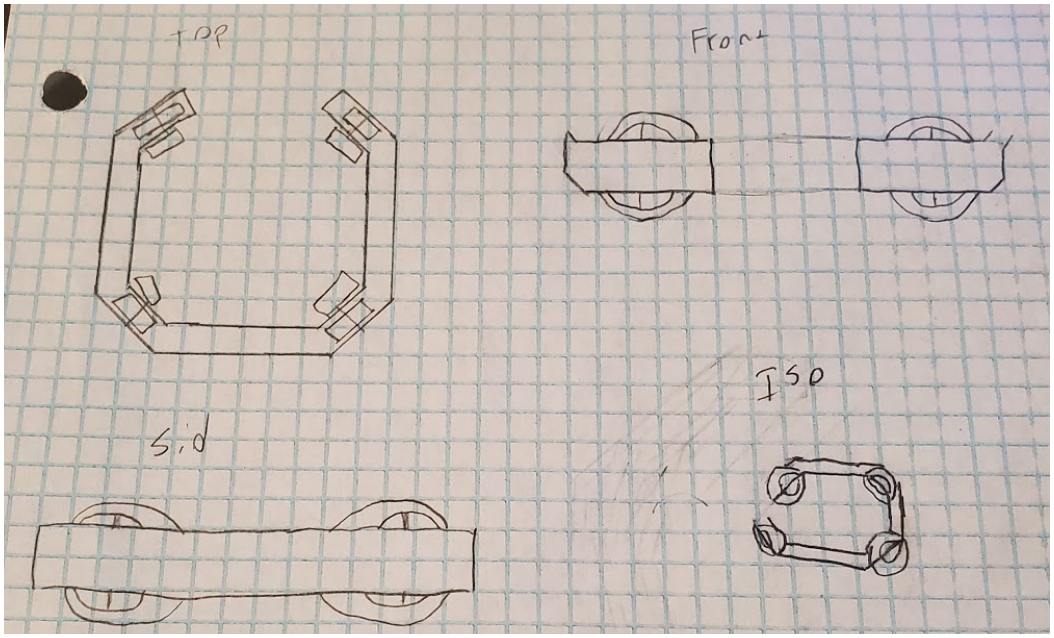

In the design above, the concept is to have omni wheels in an x-drive. This will allow the robot to move in all directions, forward, backwards, and diagonally with precision. This means the robot will be easier to drive in an efficient manner.

Unfortunately, this design requires four motors, one for each wheel. This will keep the chassis fast and strong, but it will leave fewer motors for the mechanisms that will be attached to sublevel 2.

Furthermore, this design may cause issues with attaching other components on top of it due to the square shape and the lack of bars or c-channels that mechanisms can be attached to.

Signature: *Eduardo Cea*		Date: 06/12/2020
Disclosed and Understood by: *Emma Meihfoer*	Date: 06/12/2020	PROPRIETARY INFORMATION

Design Process: Brainstorm - Chassis Design Two

Two Wheel Chain Drive

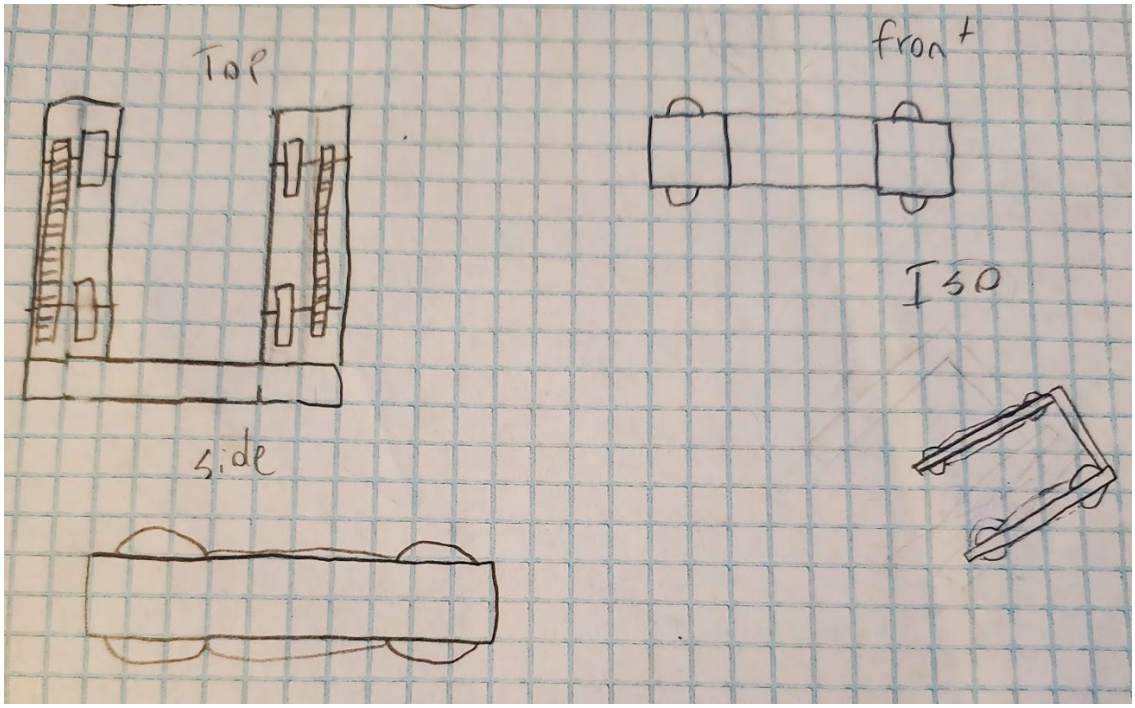

In the design above, the chassis will be in the shape of a u. We will be using omni wheels due to the fact that it makes turning easier, since they slide side to side.

A chain and sprockets will connect the front and back wheels on each side. This allows one each side of the chassis to be controlled by one motor. This means the chassis will be two wheel drive instead of four wheel drive. Not only does this eliminate the number of motors we will be using, but it makes it easier to turn robots when driving.

In this design, we are thinking about making the chassis 12 inches by 16 inches. By having these dimensions, the chassis will be just wide enough to have the wheels and hug the balls. The chassis will also have enough depth for us to build upon it, while leaving two inches on the outside for additional attachments.

There are concerns that the chassis lacks support. Since it only has one bar going across in back, it may not be able to be strong enough to support further mechanisms. It may not be able to function if the back bar happens to become bent.

Signature: *Eduardo Cea*		Date: 06/12/2020
Disclosed and Understood by: *Emma Meihfaer*	Date: 06/12/2020	PROPRIETARY INFORMATION

Design Process: Brainstorm - Chassis Design Three

Two Wheel Gear Drive

In the design above, the chassis will be in the shape of a u. We will be using omni wheels due to the fact that it makes turning easier, since they are able to move side to side.

Many gears are used to connect the back wheel to the front

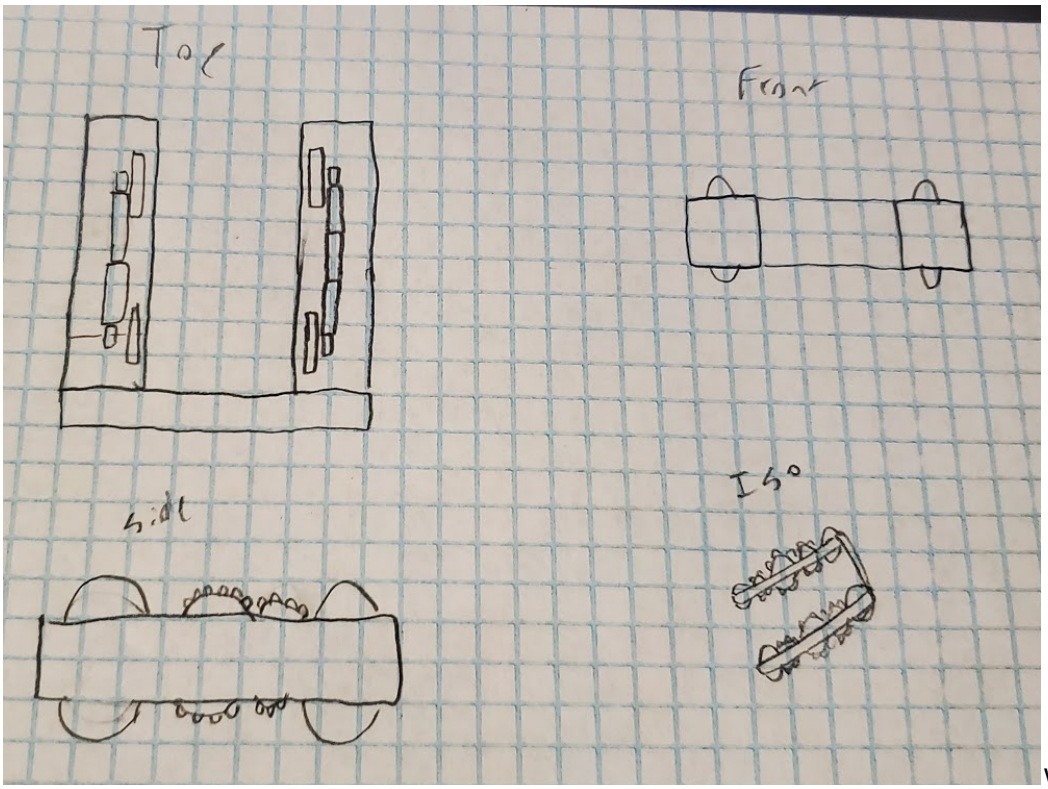

wheels; allowing one side to be controlled by one motor. This means the chassis will be two wheel drive instead of four wheel drive. Not only does this eliminate the number of motors we will be using, but it makes it easier to turn robots when driving.

Signature: *Eduardo Cea*		Date: 06/12/2020
Disclosed and Understood by: *Emma Meihfoer*	Date: 06/12/2020	PROPRIETARY INFORMATION

Design Process: Brainstorm - Chassis Decision Matrix

	Design One	Design Two	Design Three
Stability	2	2	2
Heavy	2	3	3
Drive Capabilities	4	3	3
Efficiency	4	3	2
Motors	2	4	4
Space	2	3	3
Total	16	18	17

The decision matrix above is being used to determine which chassis design is the best choice for our robot. Each design is given a ranking from 1-4 on a specific category with 1 being the worst and 4 being the best. The categories in which the chassis is being judged upon are stability, heaviness, drive capabilities, efficiency, motor usage, and available space.

Stability - Is it strong enough to withstand having lots of weight applied to it with additional mechanisms

Heaviness - Is it heavy enough to prevent the robot from tipping over if bumped into

Drive Capabilities - Is it able to be driven easily in the directions required

Efficiency - Is it able to move quickly without causing issues

Motor Usage - Does it use fewer motors, so more motors can be used in other applications

Available Space - Is there enough available space for other components to be applied on top of the chassis

It can be seen that design two fits the requirements for our chassi the best by a small margin.

Signature: Emma Meihfoer		Date: 06/12/2020
Disclosed and Understood by: Eduardo Cea	Date: 06/12/2020	PROPRIETARY INFORMATION

Design Process: Brainstorm - Chassis Final Design

Two Wheel Chain Drive

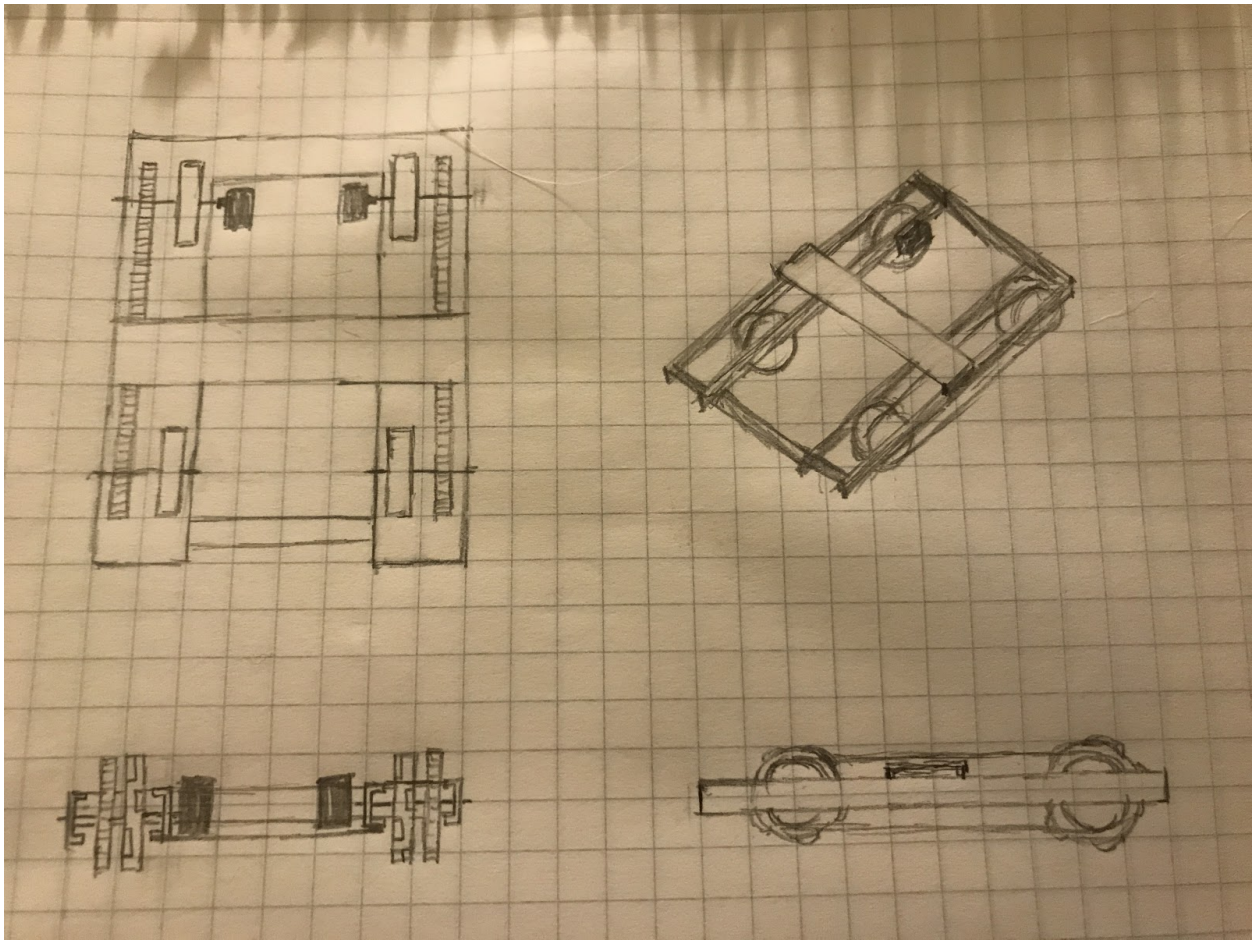

In the image above, the finalized design for the chassis is shown.

This design was based on chassis design two. Two bars were added to this chassis design. One bar was placed at the very front and another bar was placed across the center. These bars were added to provide more stability and structural support for future added mechanisms to the robot.

Signature: Emma Meihfoer		Date: 06/12/2020
Disclosed and Understood by: Eduardo Cea	Date: 06/12/2020	PROPRIETARY INFORMATION

Design Process: Brainstorm - Front Intake Design One

Stationary Bottom Rollers

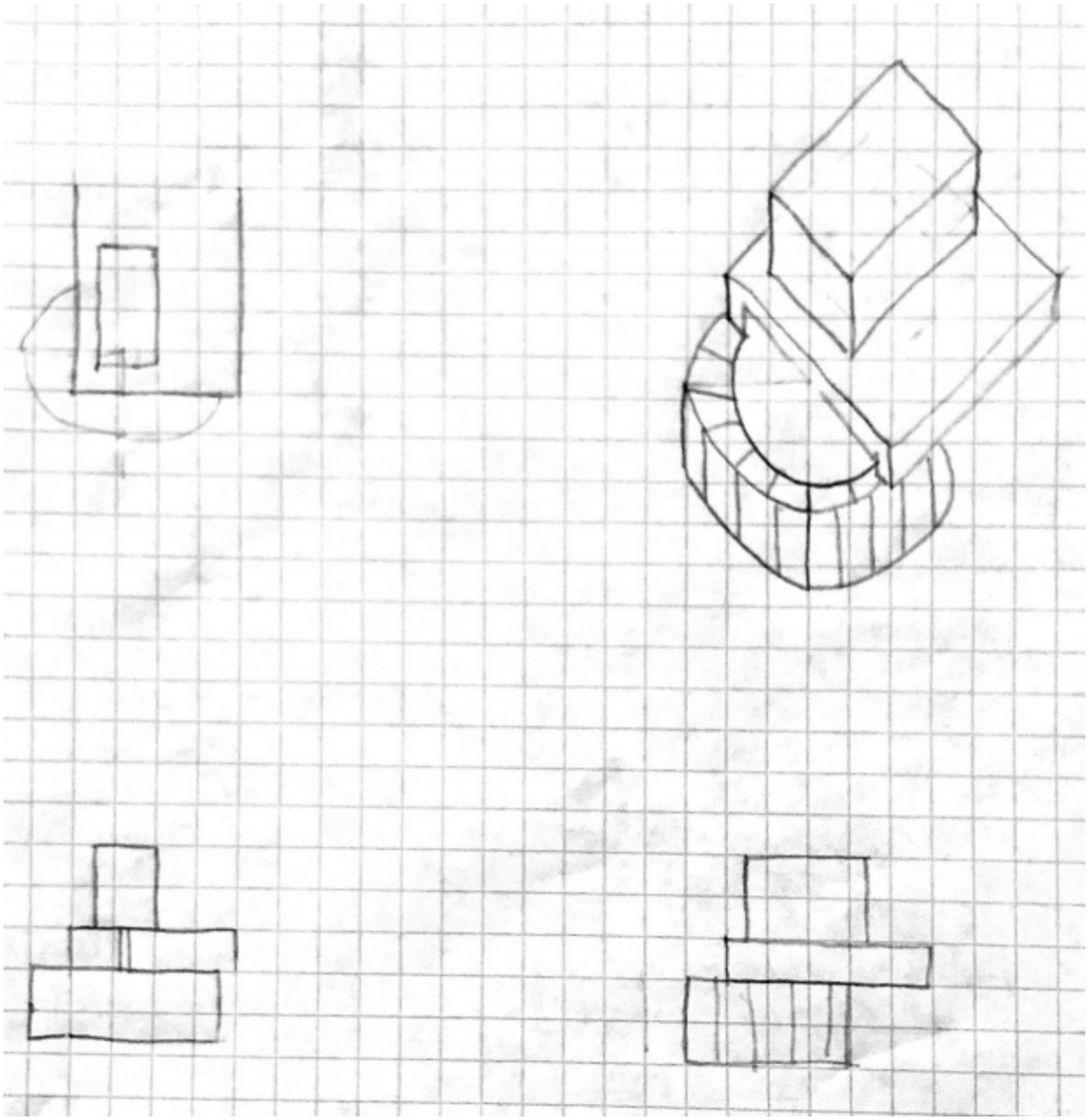

Although there was direct power from the motor which means that the roller has a very slim chance to slip, however it being located on the very bottom of the chassis meant that it was unable to get under the goal posts to descore. Their grip on the ball was mediocre at best but they are good test rollers.

Signature: Alexander Daichendt		Date: 06/12/2020
Disclosed and Understood by: Emma Meihfoer	Date: 06/12/2020	PROPRIETARY INFORMATION

Design Process: Brainstorm - Front Intake Design Two

Flip-down Chain Rollers

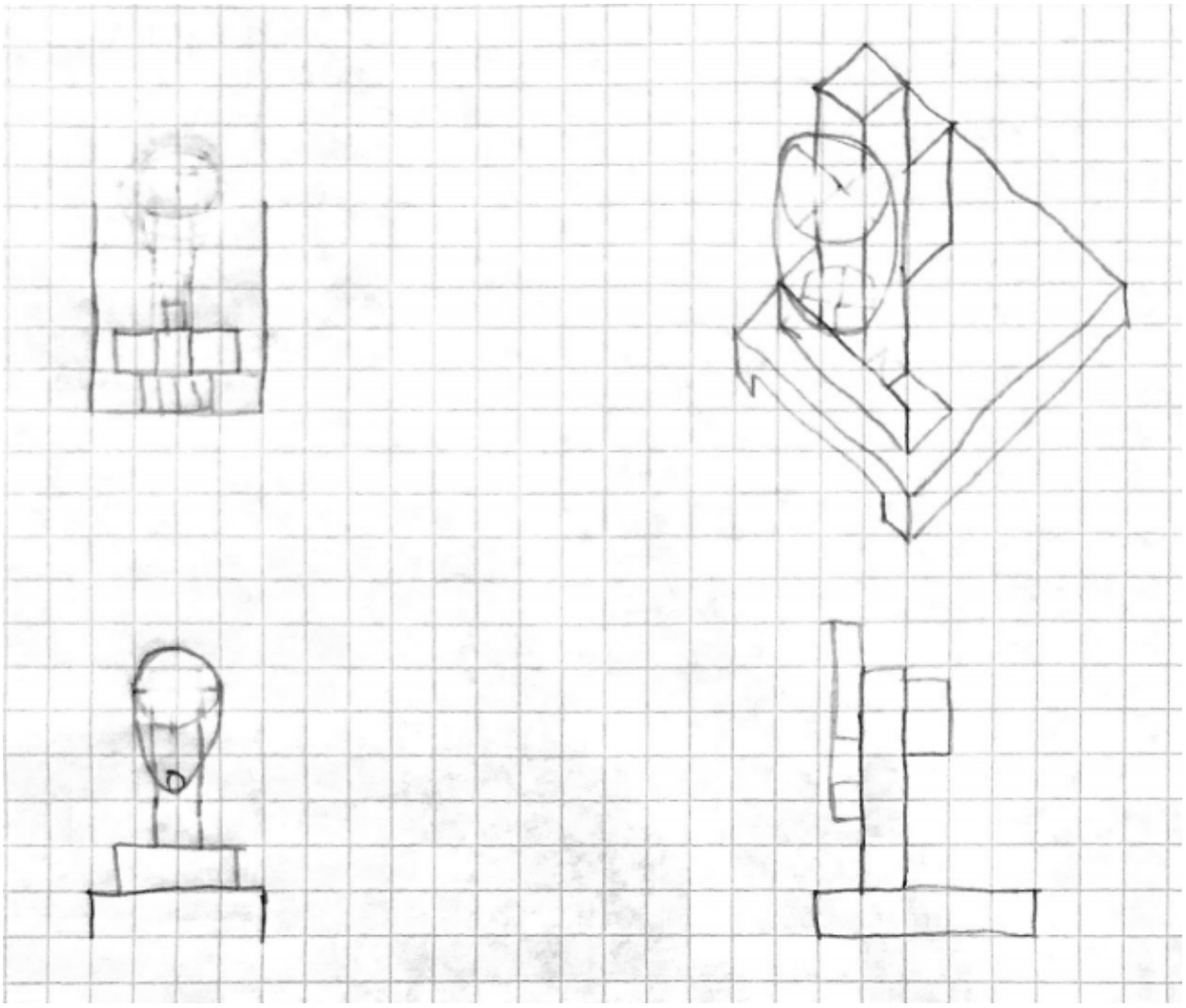

These intakes have a good deploy as they fit easily with the 18 inches constraint, allowing for more expansion of the robot itself. However, the grip on the intakes is extremely weak due to no tension being made between the intakes if two of them were to be made for each side. It also has issues with the space between the goal post scoring zone. They also are extremely weak support wise as well, but have good spacing constraints.

Signature: Alexander Daichendt		Date: 06/12/2020
Disclosed and Understood by: Emma Meihfoer	Date: 11/29/2020	PROPRIETARY INFORMATION

Design Process: Brainstorm - Front Intake Design Three

Flip-in Stationary Rollers

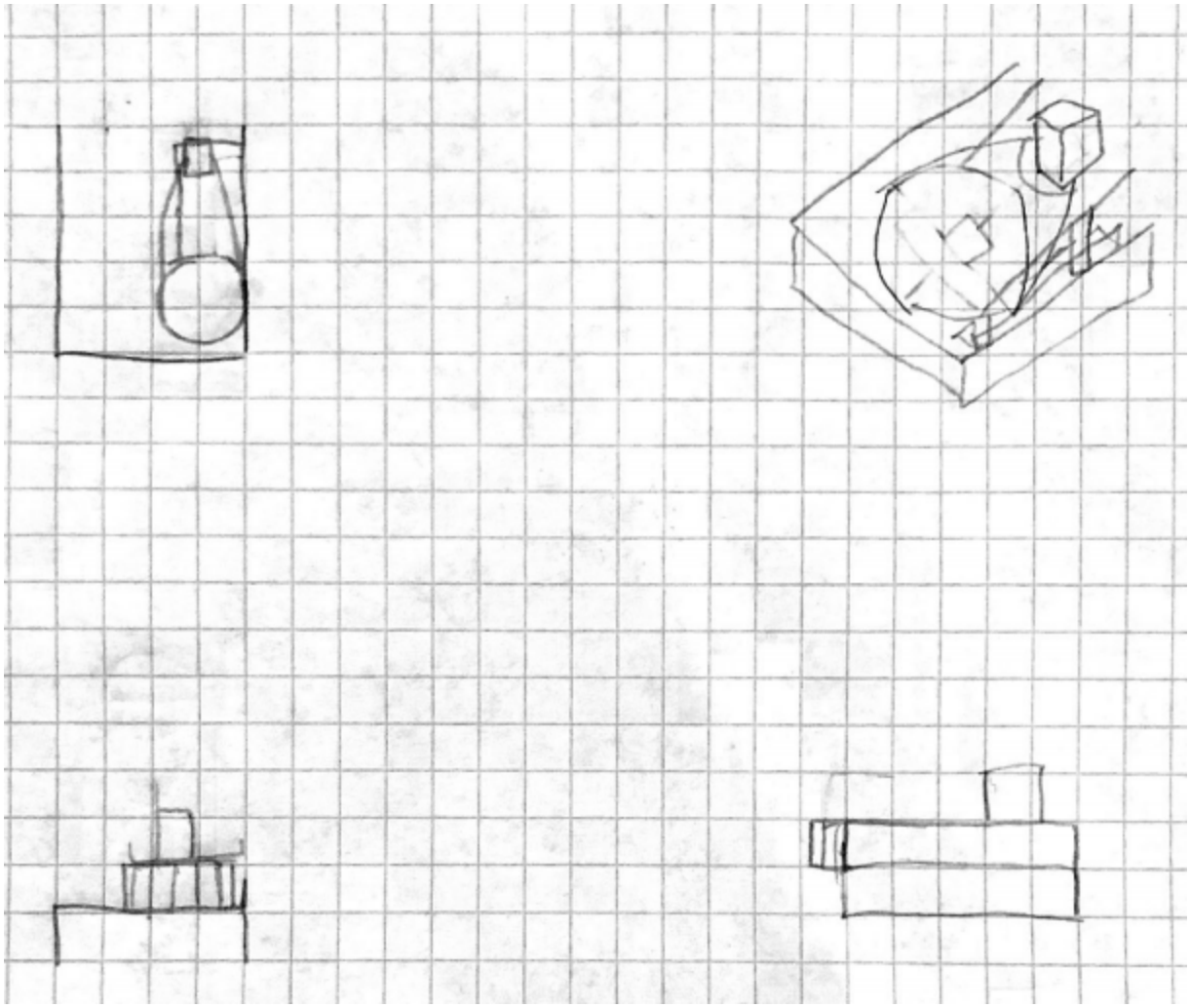

These intake rollers have good grip upon the ball and do well to feed a ball into the system. However, they are very unstable during starts due to rubber band tension. They also need many other additions to the robot in order to be effective which can cause other complications. Overall, they are good rollers, but very unstable and complicated to build.

Signature: Alex Daichendt		Date: 06/12/2020
Disclosed and Understood by: Emma Meihfoer	Date: 06/12/2020	PROPRIETARY INFORMATION

Design Process: Brainstorm - Front Intake Design Four

Long Stationary Rollers

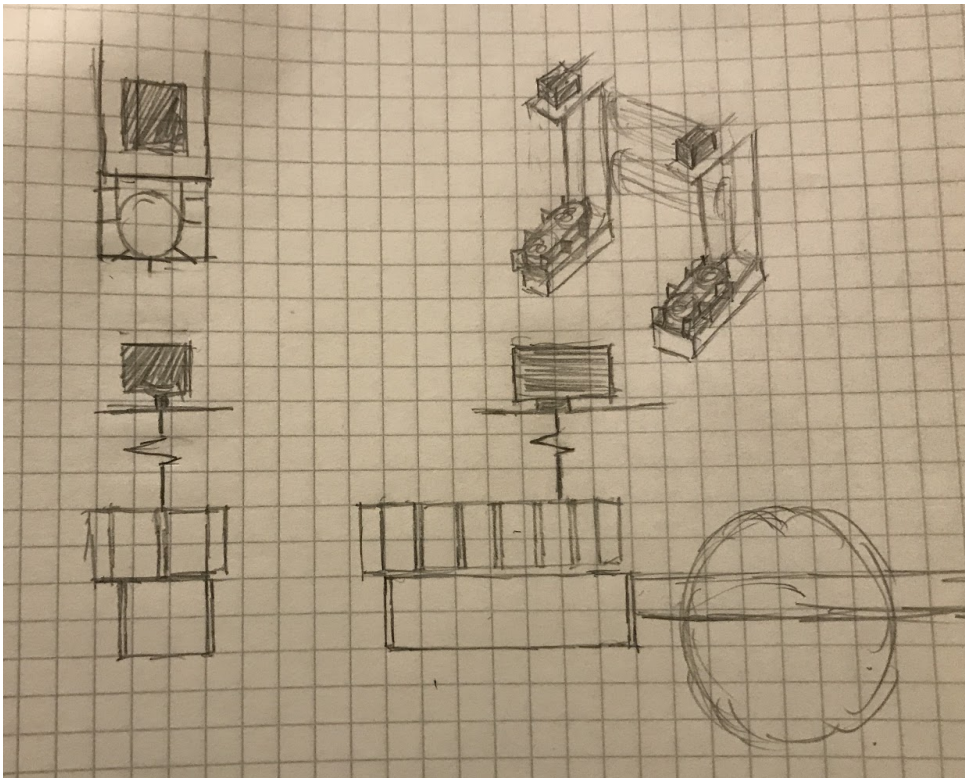

In the design above, the intakes will be stationary. The shape of the intakes are longer and similar to an oval. By keeping the motors up top, it may be easier to be space efficient. The intakes may have a harder time picking up balls due to the fact that they can't move to fit the size of the balls.

Signature: Emma Meihfoer		Date: 06/12/2020
Disclosed and Understood by: Alex Daichendt	Date: 06/12/2020	PROPRIETARY INFORMATION

Design Process: Brainstorm - Front Intake Decision Matrix

	Design One	Design Two	Design Three	Design Four
Space	3	4	3	1
Descoring capabilities	1	2	1	4
Grip	2	3	3	2
Ease of Use	2	3	2	3
Total	8	12	9	10

The decision matrix above is being used to determine which intake design is the best choice for our robot. Each design is given a ranking from 1-4 on a specific category with 1 being the worst and 4 being the best. The categories in which the intake is being judged upon are space efficiency, descoring capabilities, ball grip, and ease of use.

Space Efficiency - the intakes should use the space efficiently, in order to keep the robot within the 18 inch parameters

Descoring Capabilities - potential to be able to descore balls from the goals

Ball Grip - Ability to grip the ball very easily

Ease of Use - easy for the driver to use to pick up balls

It can be seen that design two best fits the requirements set.

Signature: Emma Meihfoer		Date: 06/12/2020
Disclosed and Understood by: Alex Daichendt	Date: 06/12/2020	PROPRIETARY INFORMATION

Design Process: Brainstorm - Front Intake Final Design

Long Stationary Rollers

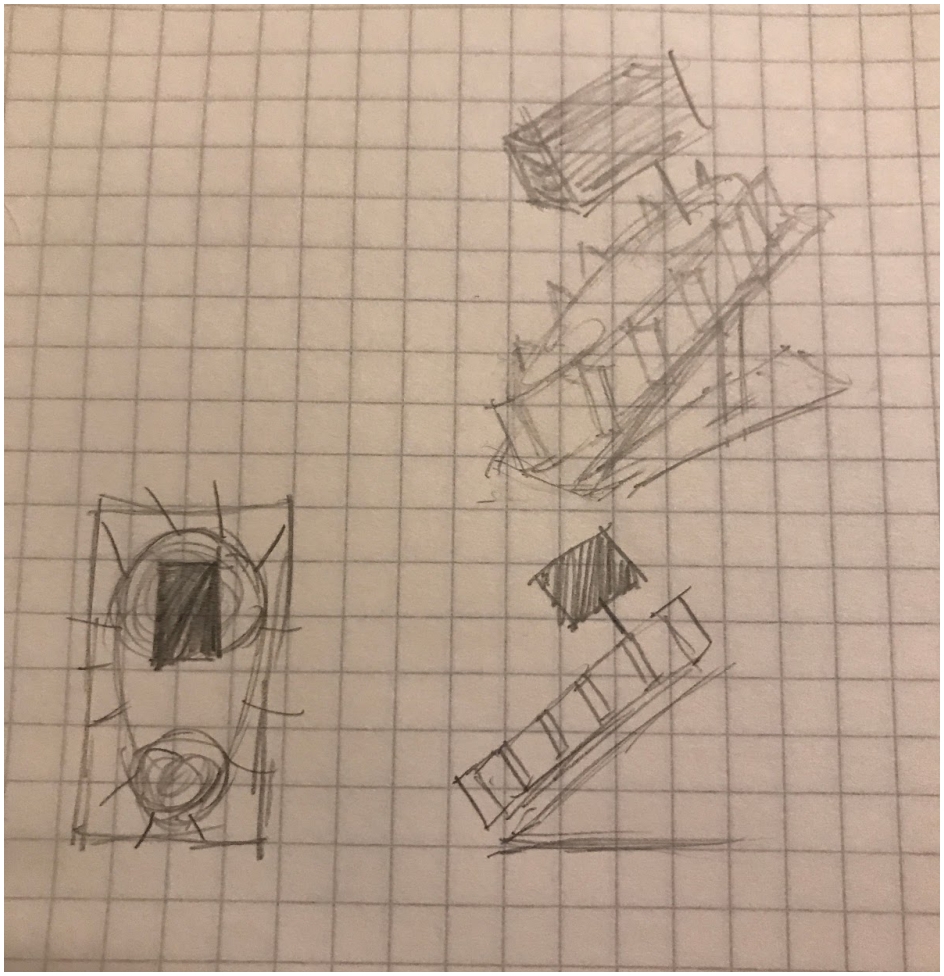

The design in the image above is the final intake design. This design was adapted from designs two and four. The intake is stationary on the robot, but the intake is attached to it at a closer distance. The goal of this is to optimize the space taken up by the intake and have an intake that can easily access the balls.

Signature: Emma Meihfoer		Date: 06/12/2020
Disclosed and Understood by: Alex Daichendt	Date: 06/12/2020	PROPRIETARY INFORMATION

Design Process: Brainstorm - Ball Lift Design One

Two Middle Up-takes (Same Side)

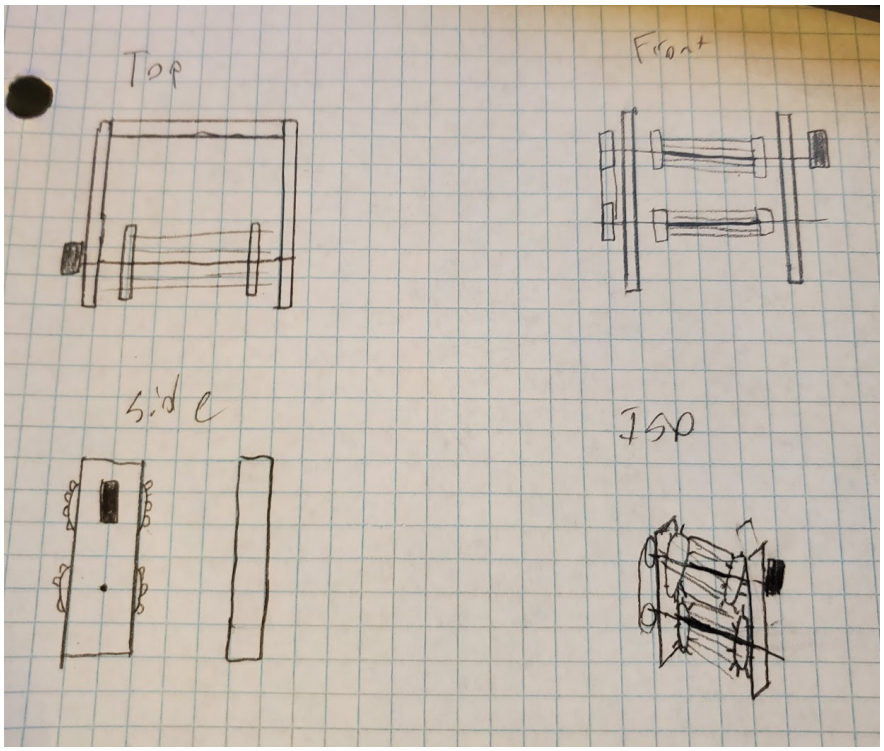

In the drawing above, two sprockets were placed on an axle with rubber bands across them. These are used to pull the balls up the robot. There are two of these devices in order to bring the ball further up the robot. The rubber bands are used instead of something like treads due to the fact that it will conform to the shape of the ball.

Signature: *Eduardo Cea*		Date: 06/12/2020
Disclosed and Understood by: *Emma Meihfoer*	Date: 06/12/2020	PROPRIETARY INFORMATION

Design Process: Brainstorm - Ball Lift Design Two

Middle Triangle Up-takes

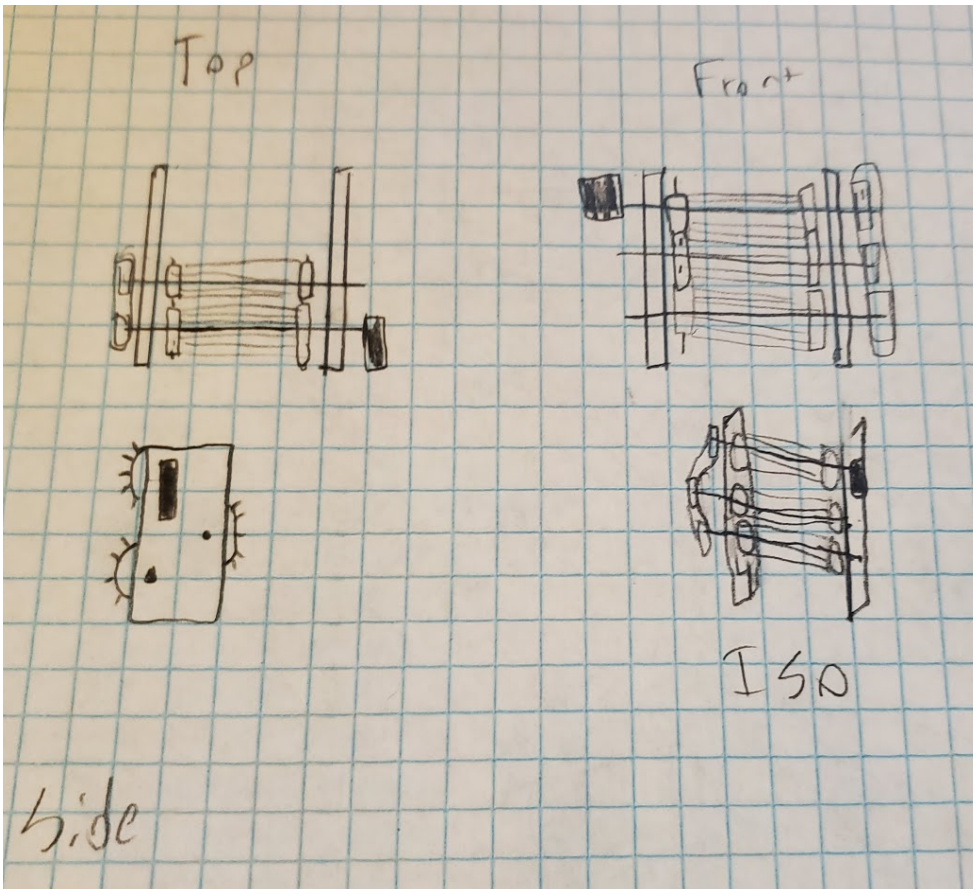

In the drawing above, gear and rubber band rollers are used to pull the ball up the robot. The gears are connected to each other, in order to use one motor to pull the ball up the robot.

Signature: *Eduardo Cea*		Date: 06/12/2020
Disclosed and Understood by: *Emma Meihfoer*	Date: 06/12/2020	PROPRIETARY INFORMATION

Design Process: Brainstorm - Ball Lift Design Three

Two Middle Up-takes (Opposite sides)

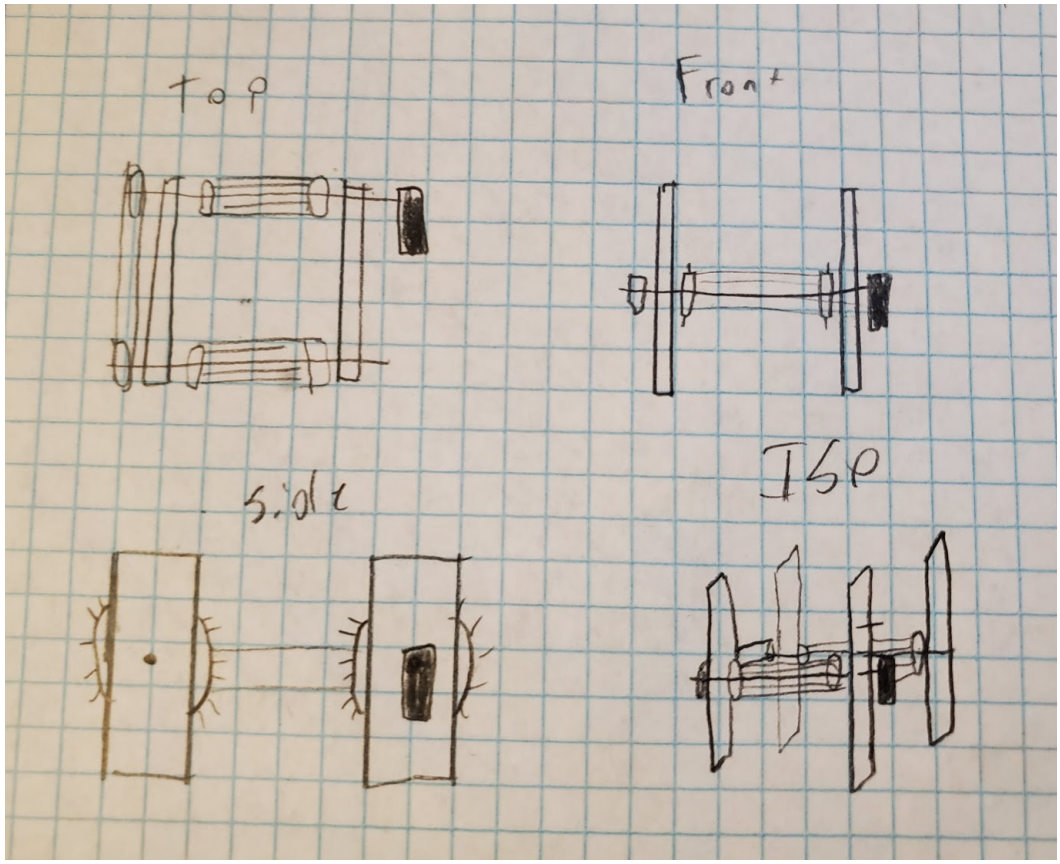

In the drawing above, the gears with rubber bands across them push the ball against each other to bring the ball up. This design prevents the balls from being pulled up as far, unless more rollers are added. This creates concerns for grip issues due to the fact that both sides are moving.

Signature: *Eduardo Cea*		Date: 06/12/2020
Disclosed and Understood by: *Emma Meihfaer*	Date: 06/12/2020	PROPRIETARY INFORMATION

Design Process: Brainstorm - Ball Lift Decision Matrix

	Design One	Design Two	Design Three
Grip	3	3	2
Space	4	3	2
Complexity	3	2	3
Lifting Capabilities	4	4	2
Total	14	12	9

The decision matrix above is being used to determine which ball lift design is the best choice for our robot. Each design is given a ranking from 1-4 on a specific category with 1 being the worst and 4 being the best. The categories in which the ball lift is being judged upon are grip, space efficiency, complexity, and lifting capabilities.

Grip - the ability of the ball lift to properly hold the balls to pull them up the robot

Space Efficiency - whether or not the ball lift minimizes the space required to complete the function

Complexity - the more complex the item is, the more likely it is to break if there is a small issue

Lifting Capabilities - whether or not the ball lift is able to lift the ball high enough

It can be seen that design one fits the needs of the robot the best.

Signature: Emma Meihfoer		Date: 06/12/2020
Disclosed and Understood by: Eduardo Cea	Date: 06/12/2020	PROPRIETARY INFORMATION

Design Process: Brainstorm - Ball Lift Final Design

Two Middle Up-takes (Same Side)

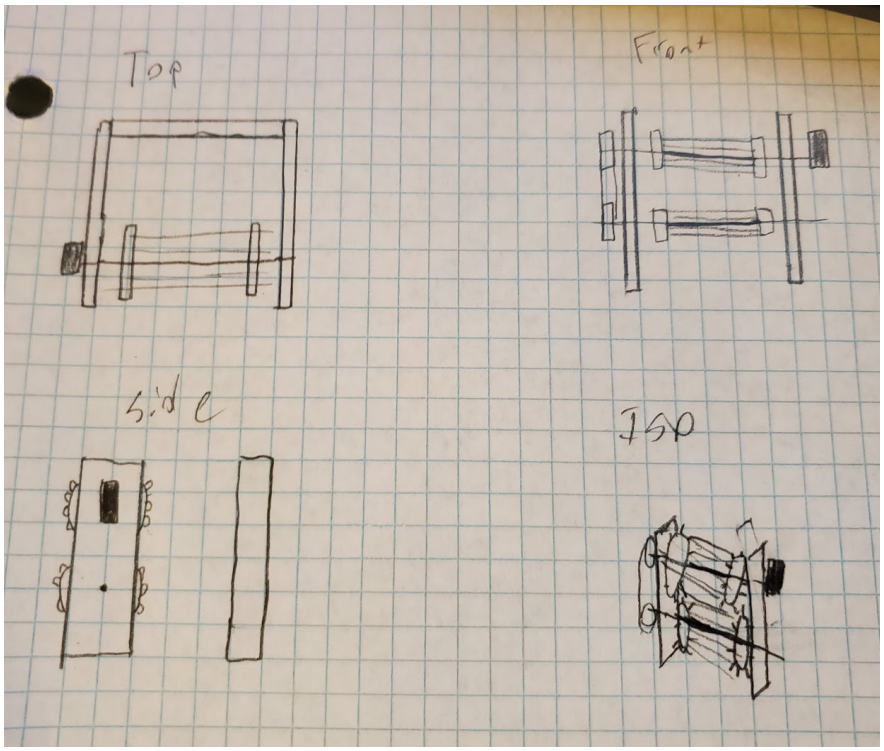

The design above comes from the first ball lift design. This design optimizes size, simplicity, and effectiveness.

Signature: Emma Meihfoer		Date: 06/12/2020
Disclosed and Understood by: Eduardo Cea	Date: 06/12/2020	PROPRIETARY INFORMATION

Design Process: Brainstorm - Launcher Design One

3 Wheel Flywheel; 1 Motor (200 RPM)

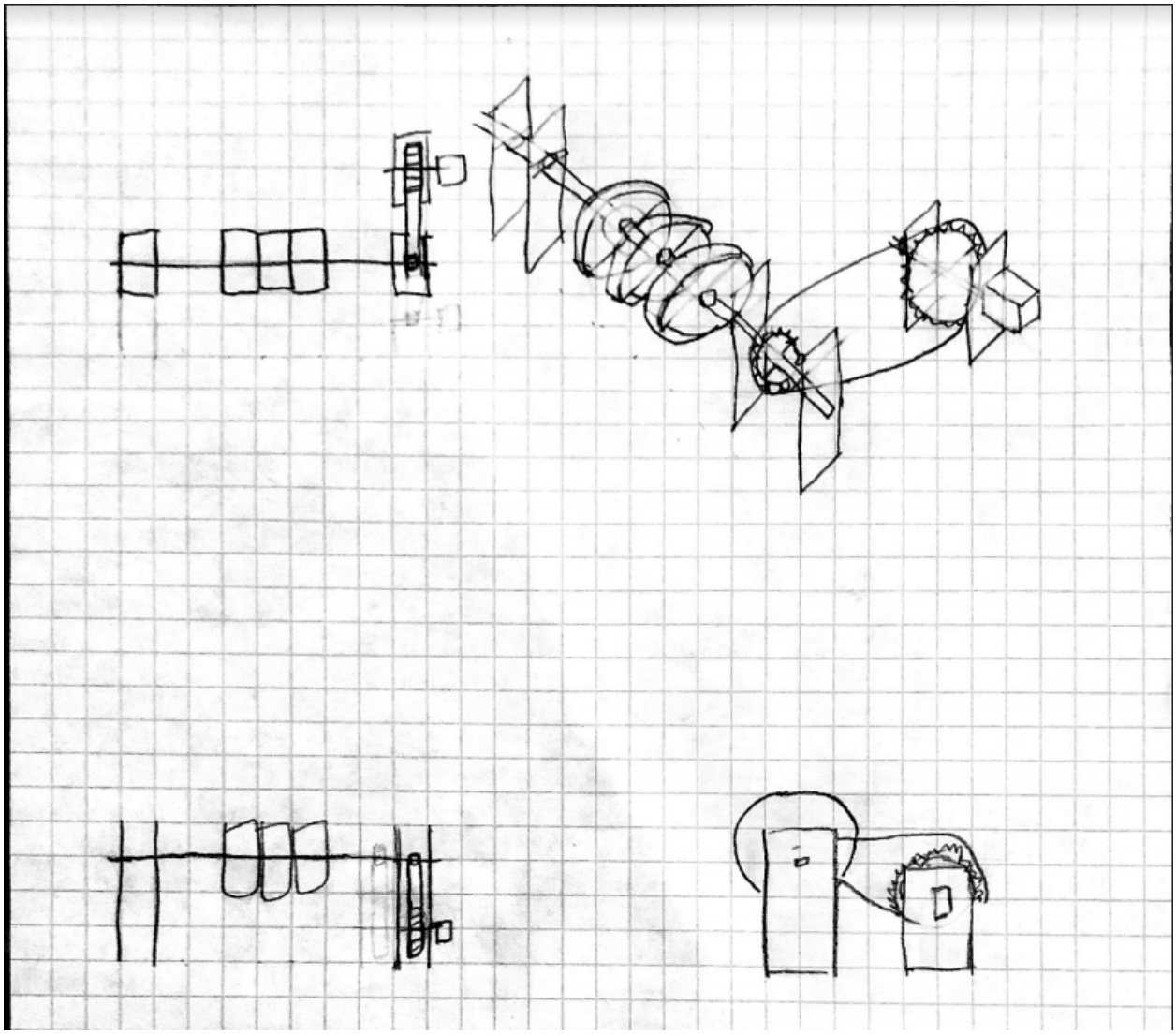

The usage of three wheels would allow the robot more contact area when launching a ball into a goal. The gear ratio of 6:1 allows for increased speed from the 200 RPM motor increasing the maximum to 1200 RPM feeding the flywheel. However, the weight of the three flywheels is too much for the motor to handle and increases the amount of time needed to spin the wheel to max RPM. This design was good for allowing us to see how more contact on the ball is beneficial to launching it. However it also showed us the implications of added weight on an axle and how it affects the motors as well.

Signature: Alexander Daichendt		Date: 06/12/2020
Disclosed and Understood by: Emma Meihfoer	Date: 06/12/2020	PROPRIETARY INFORMATION

Design Process: Brainstorm - Launcher Design Two

2 Gear-wheel Flywheel with Angling Fin; 1 Motor (300 RPM)

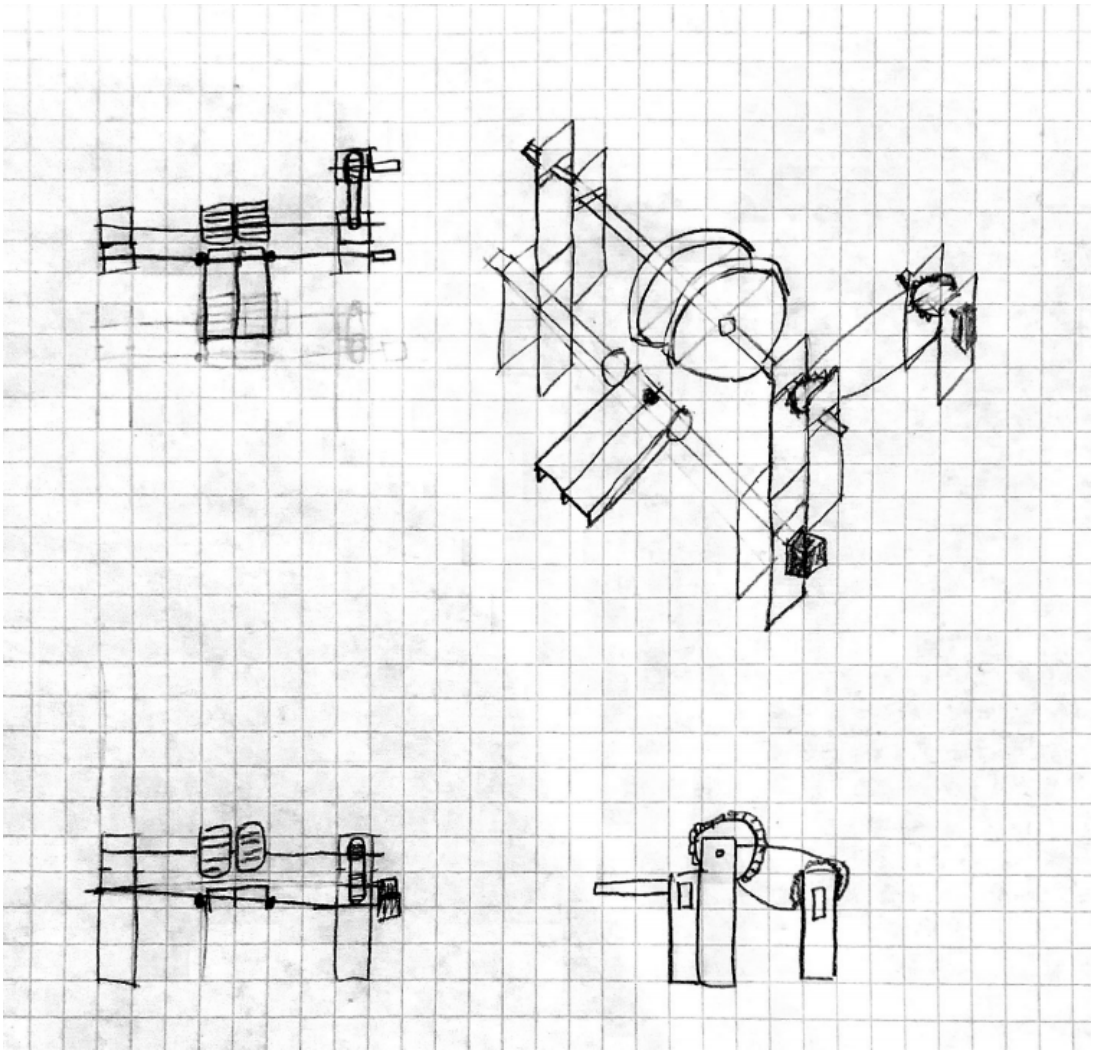

By modifying the first design from 3 to 2 flywheels, there was a decreased time in the spin up of the flywheel as well as more RPM from the increased motor going from a 200 RPM motor cartridge to a 300 RPM one. Two flywheels were also enough for the ball to be properly gripped as well as creating a centerline for the ball to travel upon, which allowed for better accuracy. However, the whole system itself is unstable due to the high RPMs and weight distribution leaning heavily on one side.

Signature: Alexander Daichendt		Date: 06/12/2020
Disclosed and Understood by: Emma Meihfoer	Date: 06/12/2020	PROPRIETARY INFORMATION

Design Process Brainstorm - Launcher Design Three

2 Gear-wheel Flywheel; 2 Motors (300 RPM)

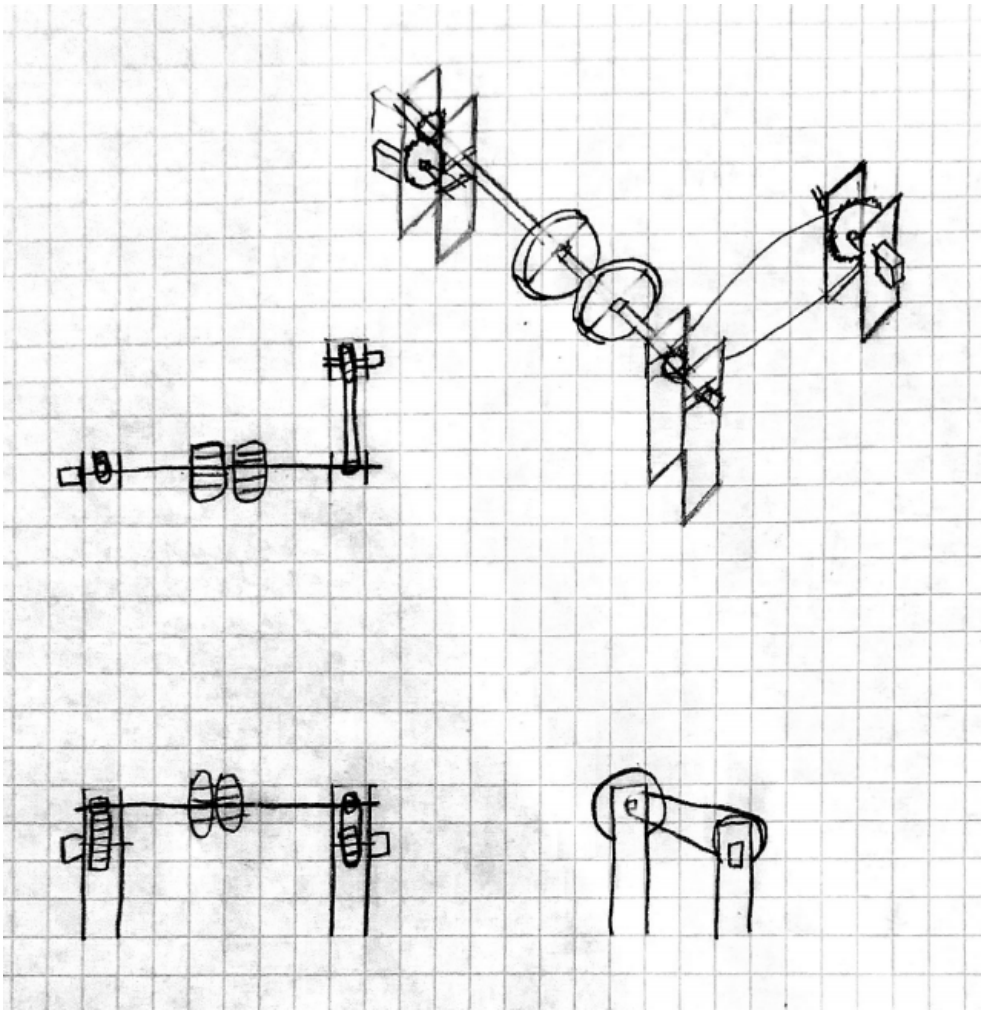

With two motors, the stability of the flywheel's spin up is much better than a singular motor. It also takes the stress off of the single motor allowing for more time before overheating. However, it does get rid of the fin which may or may not be good depending on the hood of the robot as well. By simply adding the second motor, the spin up is much more smooth, the stress is distributed to two motors from one, and the runs longer than one motor.

Signature: Alexander Daichendt		Date: 06/12/2020
Disclosed and Understood by: Emma Meihfoer	Date: 06/12/2020	PROPRIETARY INFORMATION

Design Process: Brainstorm - Launcher Decision Matrix

	Design One	Design Two	Design Three
Aim	3	4	3
Ball Grip	4	2	2
Speed	2	3	3
Total	9	9	8

The decision matrix above is being used to determine which launcher design is the best choice for our robot. Each design is given a ranking from 1-4 on a specific category with 1 being the worst and 4 being the best. The categories in which the launcher is being judged upon are aim, ball grip, and speed.

Aim - will the launcher have inconsistencies in the aiming of the ball

Ball Grip - will the launcher be able to grab and shoot the ball

Speed - will the launcher be spinning fast enough to shoot the ball

It can be seen that both design one and design two were equal in their respective abilities to meet the requirements set for the robot.

Design Process: Brainstorm - Launcher Final Design

3 Gear-wheel Flywheel; 1 Motors (300 RPM)

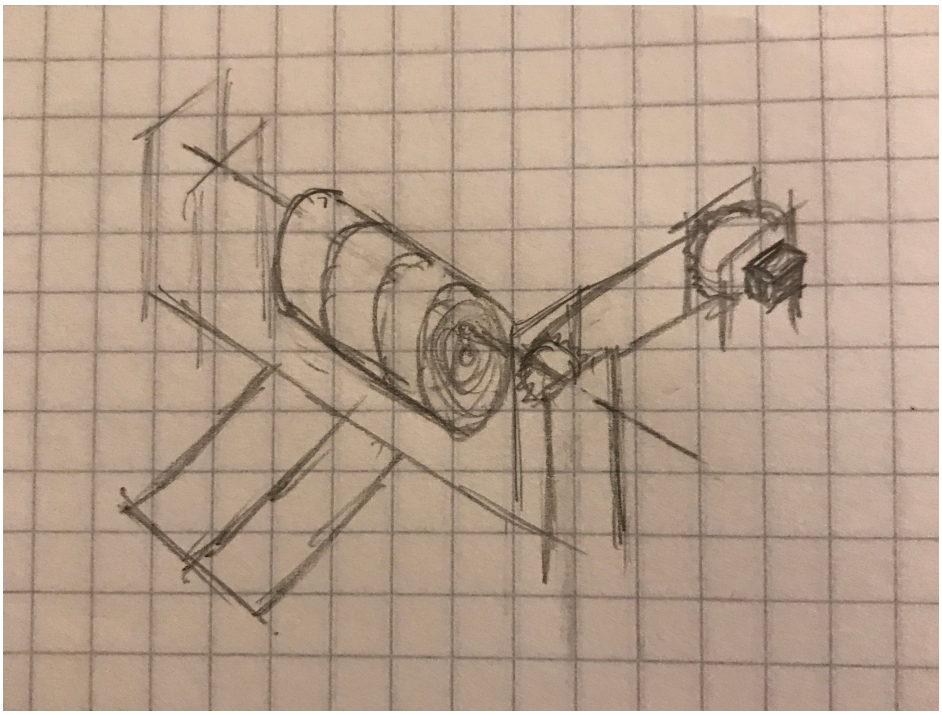

Due to the fact that designs one and two tied in the decision matrix, the final design, seen above, incorporates the best factors of both.

The design contains three flywheels due to the fact that this increases the area that is used to grab the balls. An aimer is also being used to guide the balls when shooting. The motor used will be 300 rpm, in order to spin the flywheels up quicker.

Signature: Emma Meihfoer		Date: 06/12/2020
Disclosed and Understood by: Alexander Daichendt	Date: 06/12/2020	PROPRIETARY INFORMATION

Design Process: Brainstorm - Hood Design One

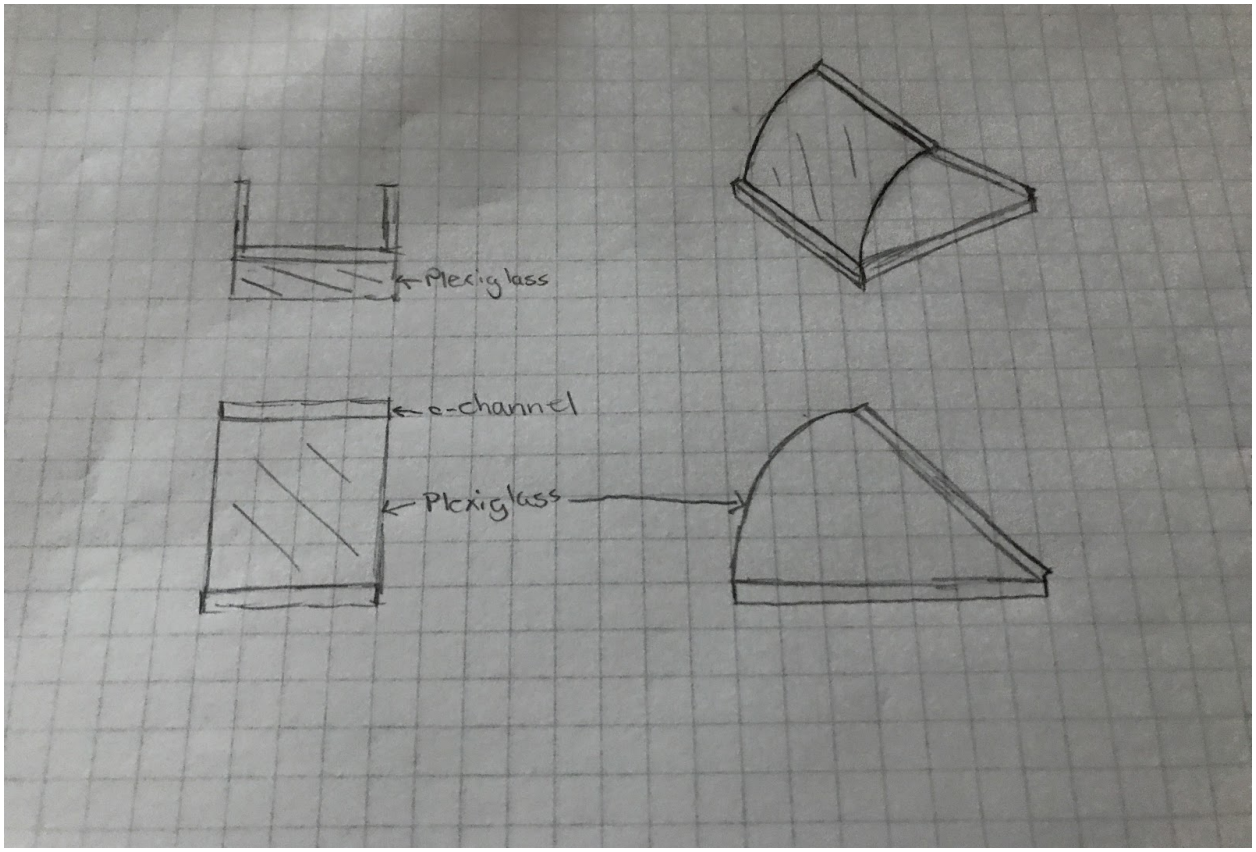

In the design above, the concept is to have a curved hood that will guide the ball when shooting. This hood will be made of plexiglass.

The plexiglass provides a strong, consistently shaped object that will guide the ball. This material may prove difficult to tuck away if it ends up being beyond the 18 inch parameters, but it is still possible.

The plexiglass also provides relatively little traction for the ball to move.

Signature: Emma Meihfoer		Date: 06/12/2020
Disclosed and Understood by: Charles Spehl	Date: 06/12/2020	PROPRIETARY INFORMATION

Design Process: Brainstorm - Hood Design Two

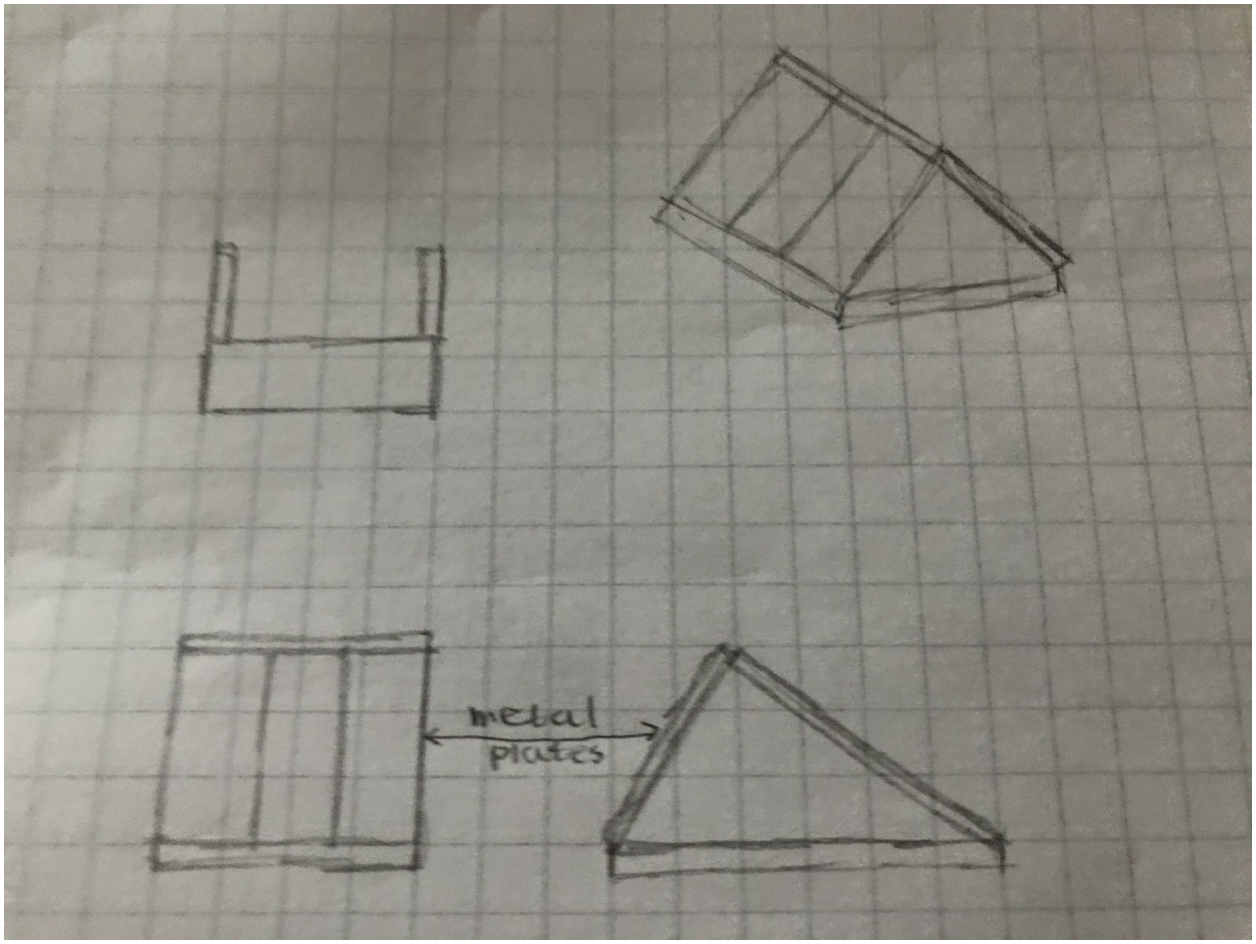

In the design above, the concept is to have a curved hood that will guide the ball when shooting. This hood will be made of metal plates.

This would be a free standing, not moveable hood. The back would be lined with metal plates. It would be extremely consistent with the path of the ball, since the metal won't bend with the force of the ball. The metal plates could also lack traction for the ball when shooting and the straight angle may not support the curved centripetal motion of the ball.

This may prove to be an issue if it goes over the 18 inch parameters on the robot. As a result, this could be a poor design choice.

Signature: Emma Meihfoer		Date: 06/12/2020
Disclosed and Understood by: Charles Spehl	Date: 06/12/2020	PROPRIETARY INFORMATION

Design Process: Brainstorm - Hood Design Three

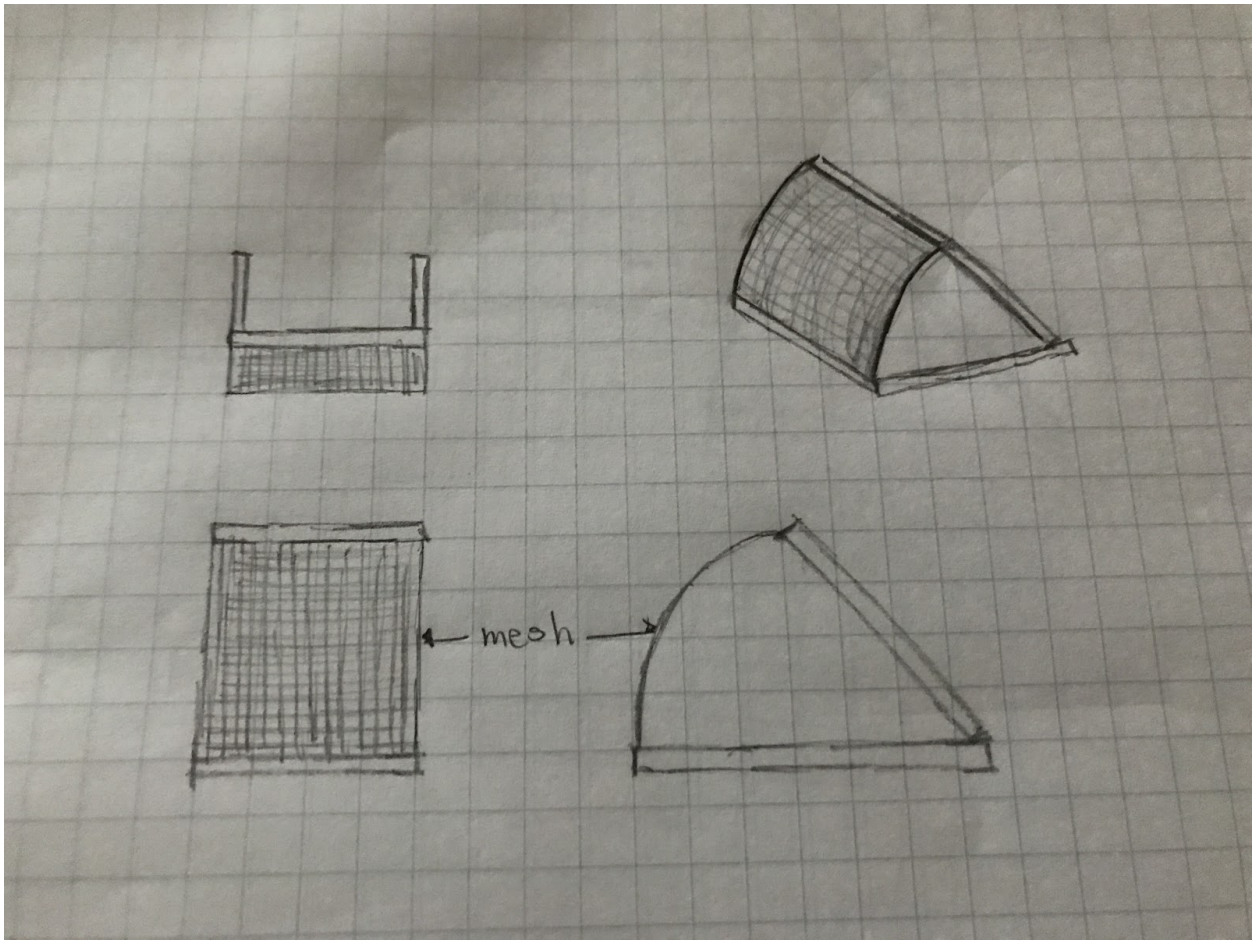

In the design above, the concept is to have a curved hood that will guide the ball when shooting. This hood will be made of mesh.

The mesh will provide good traction for the ball when shooting and will allow the ball to conform to centripetal force, but it may provide inconsistencies in the direction the ball is shot. These may be relatively small inconsistencies that do not largely affect the robot function.

The mesh is also a weaker material that may break from excessive force applied to it by multiple balls hitting it.

Signature: Emma Meihfoer		Date: 06/12/2020
Disclosed and Understood by: Charles Spehl	Date: 06/12/2020	PROPRIETARY INFORMATION

Design Process: Brainstorm - Hood Decision Matrix

	Design One	Design Two	Design Three
Compactability	3	1	4
Consistency	3	3	2
Traction	2	2	3
Strength	3	4	1
Total	11	10	10

The decision matrix above is being used to determine which hood design is the best choice for our robot. Each design is given a ranking from 1-4 on a specific category with 1 being the worst and 4 being the best. The categories in which the hood is being judged upon are compactability, consistency, traction, and strength.

Compactability - the ability for the hood to be pushed down and compacted to be out of the way and allow the robot to remain within the 18 inch parameters.

Consistency - the possibility of the hood design changing the direction the ball is shot, leading to inconsistencies in the direction of the ball's shot.

Traction - The ability for the ball to easily move along the hood design and not get caught or slip off.

Strength - the ability for the material to remain stable and together when the balls are being shot.

It can be seen that design one is the best design to fit the needs of our robot.

Design Process: Brainstorm - Hood Final Design

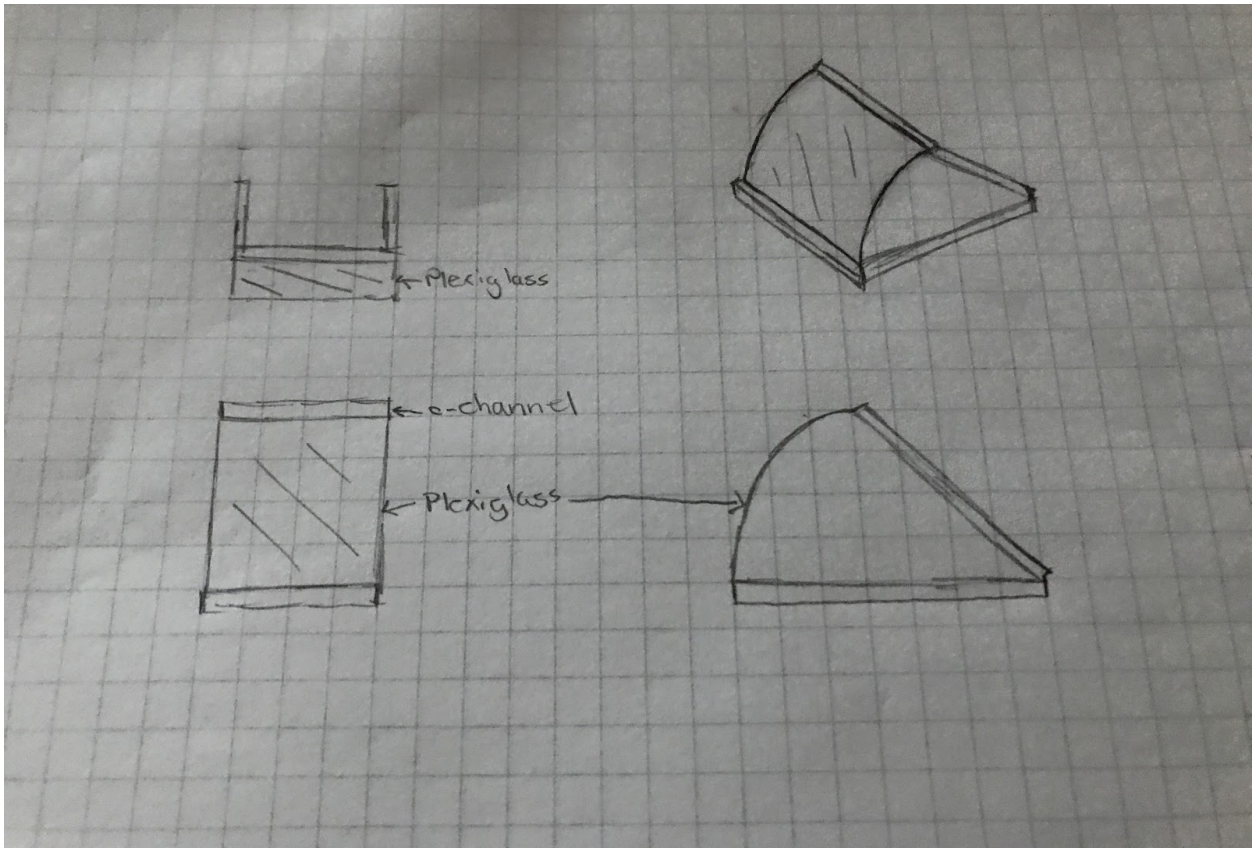

The hood design chosen was hood design one. The hood will be attached to the top of the chassis. The hood chosen was plexiglass. This design was able to balance compactability and consistency, for the optimal design.

Signature: Emma Meihfoer		Date: 06/12/2020
Disclosed and Understood by: Charles Spehl	Date: 06/12/2020	PROPRIETARY INFORMATION

Design Process: Build - Day 1: Chassis

On this first build day, we built the first half of the chassis, which just consisted of 2 pieces of C-channel and wheels with axles. There was also a sprocket on the side of each wheel, so that they could end up being chained together to make the chassis 4 wheel drive.

A lot of this day was spent still setting up and getting organized with all the parts.

Signature: Emma Meihfoer		Date: 06/13/2020
Disclosed and Understood by: Alex Daichendt	Date: 06/13/2020	PROPRIETARY INFORMATION

Design Process: Build - Day 2: Chassis

The other side of the chassis was completed, as can be seen in the image below.

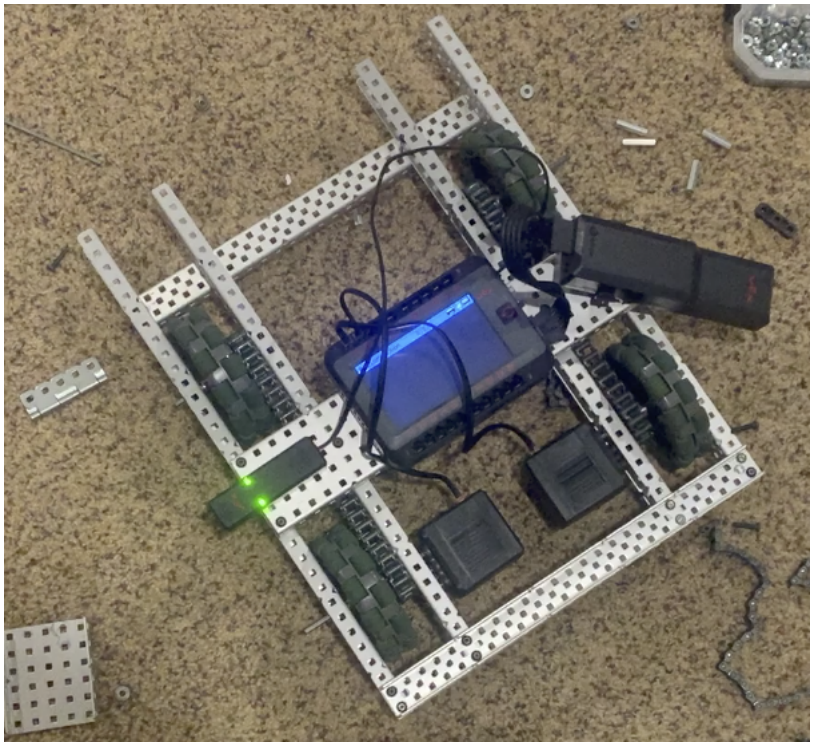

Both sides of the chassis were connected together using 2 C-channels and one 5-Wide that ran across the entire thing to make it structurally sound. The motors were also attached and the chain was put on linking all the wheels together to make it 4 wheel drive.

Signature: Emma Meihfoer		Date: 06/14/2020
Disclosed and Understood by: Alex Daichendt	Date: 06/14/2020	PROPRIETARY INFORMATION

Design Process: Program - Day 1: Chassis

```
// This is the main execution loop for the user control program.
// Each time through the loop your program should update motor + servo
// values based on feedback from the joysticks.

//-------------------------Chassis Control---------------------------------------

RM.spin(directionType::undefined, Controller1.Axis2.value(), velocityUnits::rpm);
LM.spin(directionType::undefined, Controller1.Axis3.value(), velocityUnits::rpm);

//-------------------------------------------------------------------------------
```

In the code snippet above, the chassis was programmed to move based on the left and right joystick values.

The driver wanted a tank drive using the vertical components of the two joysticks on the remote.

The maximum value of the joysticks is 127 and the minimum is -127, so the units need to be in RPM rather than something like Voltage.

Signature: Charles Spehl		Date: 06/14/2020
Disclosed and Understood by: Emma Meihfoer	Date: 06/14/2020	PROPRIETARY INFORMATION

Design Process: Test - Chassis

The chassis was tested with the V5 brain temporarily attached and the radio and battery loosely attached to the chassis. The chassis was driven around on carpet.

By driving on carpet, the robot experienced more resistance than if it were driving on the VEX mats, so it was almost guaranteed to work on the vex mats. Due to the battery not being properly attached to the chassis, it dragged across the floor, beside the robot, leading to further resistance.

The test was done to see how the chassis would drive with the drive code, and it performed exactly as planned, with no changes needed to make it drive better. There was no clicking or catching of the wheels on parts.

After attaching the intakes, the chassis will be tested again to ensure that it properly supports the objects on top of it.

Signature: Emma Meihfoer		Date: 06/14/2020
Disclosed and Understood by: Charles Spehl	Date: 06/14/2020	PROPRIETARY INFORMATION

Design Process: Build - Day 2: Chassis

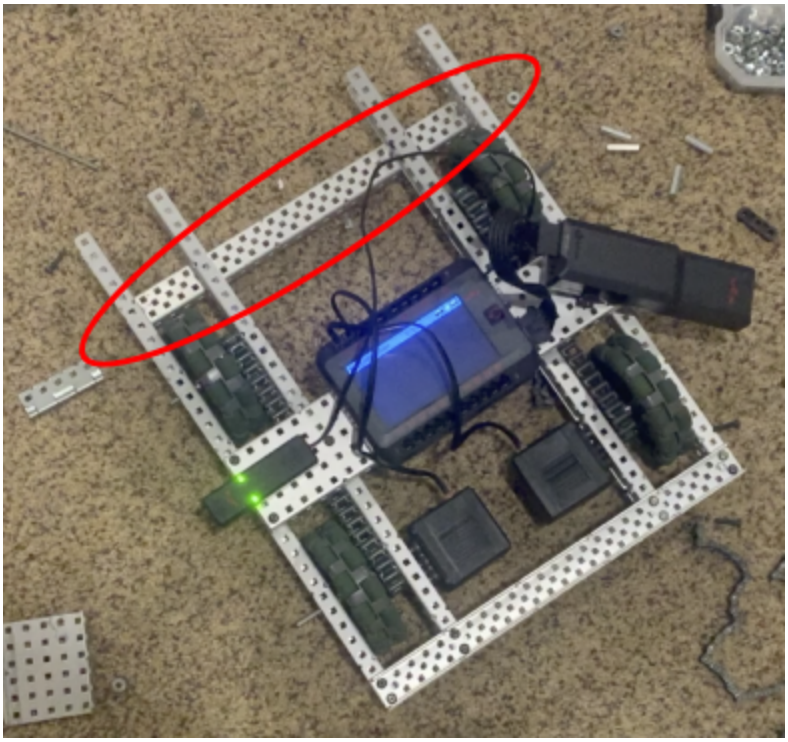

In the image above, the front bar from the chassis is circled. This bar may prove to be a difficult addition to the chassis. It has the potential to block the balls from being picked up by the robot. With this bar in the way, it may be challenging to properly score and descore balls.

As a result of this realization, the team decided it would be in our best interest to remove this bar.

Originally, this bar was attached to the front of the chassis to provide additional structural support. Although the bar is removed, the chassis will still have enough structural support to remain sturdy for the additional components that will be added on top of the chassis to score balls.

Signature: Charles Spehl		Date: 06/14/2020
Disclosed and Understood by: Emma Meihofer	Date: 06/14/2020	PROPRIETARY INFORMATION

Design Process: Build - Day 2: Front Intake

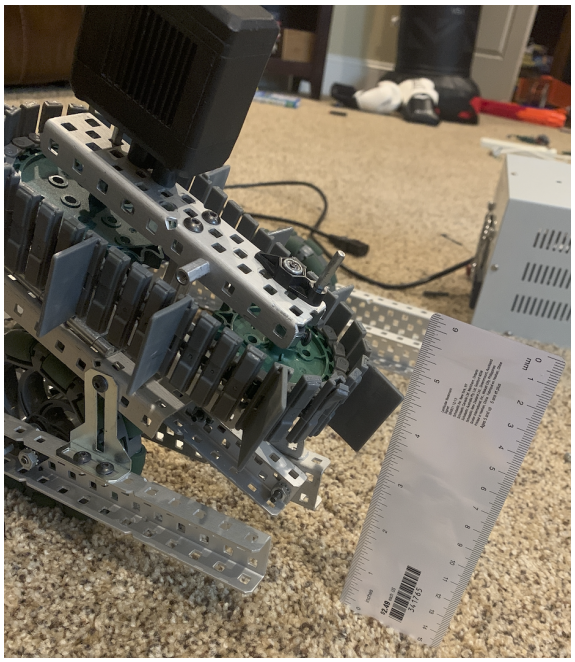

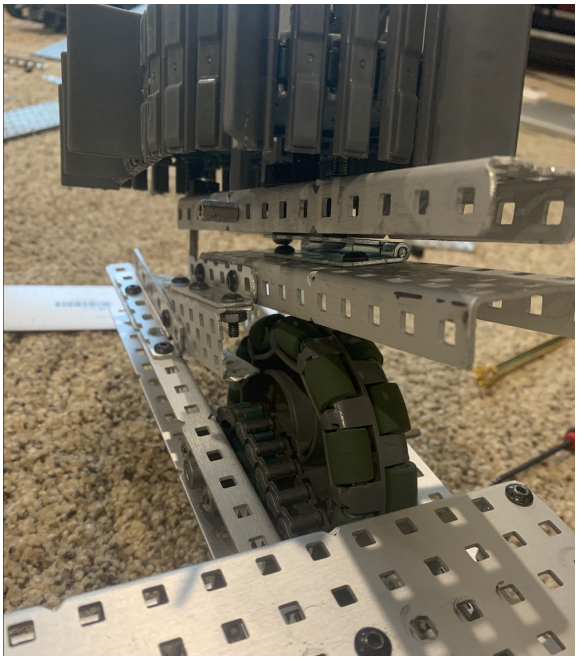

In the images above, the front intakes can be seen. The intakes were mounted at an angle that would provide them with the ability to clear the wheels while being efficiently spaced to remain within the 18 inch parameters.

Two sprockets were attached to a c-channel mounted to the chassis. Treads with flaps were added around the two sprockets of the intakes. Next, the motor was attached on top of the intakes to the back sprocket due to space constraints.

The back sprocket was larger than the front sprocket in order to provide a wider margin of error when picking up the balls before narrowing it down when pulling the balls into the robot.

In the image on the left, it can be seen that the front intakes are centered a little under 4 inches above the ground. This measurement allows the intakes to take up the balls more efficiently since the height of the intake is approximately equivalent to the height of the middle point of the balls, or the radius.

In the image to the right, it can be seen that the front intakes were placed on hinges with the goal of attaching rubber bands to the hinges, in order to make the intakes spring loaded. This would allow more effective gripping of the balls when intaking.

Signature: Charles Spehl		Date: 06/14/2020
Disclosed and Understood by: Emma Meihfoer	Date: 06/14/2020	PROPRIETARY INFORMATION

Design Process: Build - Day 3: Front Intake

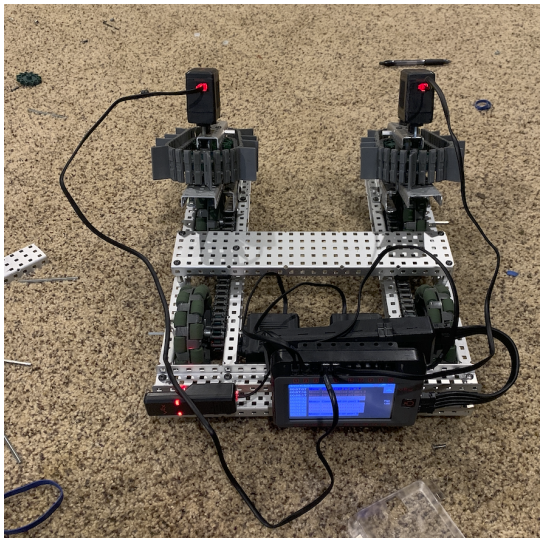

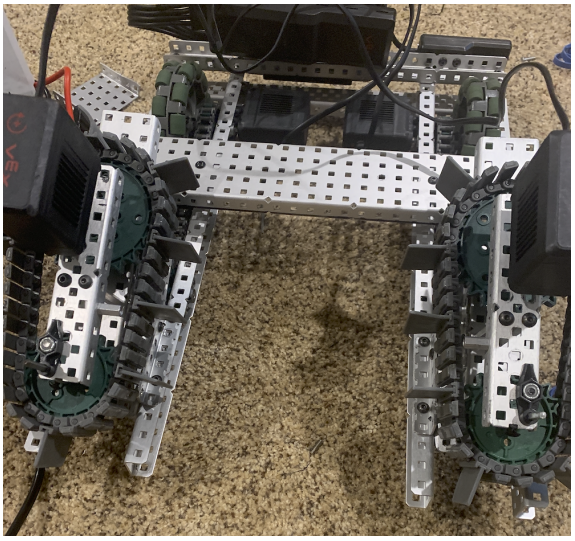

The intake found on the right side of the robot was recreated on the left side of the robot.

Two sprockets were attached to a c-channel mounted to the chassis. Treads with flaps were added around the two sprockets of the intakes. Next, the motor was attached on top of the intakes to the back sprocket due to space constraints.

The concern over the placement of the 5-wide across the middle of the chassis was brought up. With this 5-wide in the middle, the balls may not have a proper path for being picked up. With this concern in mind, the V5 Brain was relocated to the back of the chassis. This provides the robot with more free space to be changed while keeping the V5 Brain and battery properly attached in a place that will not cause as many issues.

Overall, the placement of the intakes have potential to work effectively, but it is unknown if they will be able to easily pick up balls.

Signature: Emma Meihfoer		Date: 06/15/2020
Disclosed and Understood by: Charles Spehl	Date: 06/15/2020	PROPRIETARY INFORMATION

Design Process: Program - Day 2: Front Intake

```
//---------------------------Intake Code-------------------------------------------

if(Controller1.ButtonR1.pressing()) {
  intakeL.spin(directionType::fwd, 100, velocityUnits::pct);
  intakeR.spin(directionType::fwd, 100, velocityUnits::pct);
} else if(Controller1.ButtonR2.pressing()) {
  intakeL.spin(directionType::rev, 100, velocityUnits::pct);
  intakeR.spin(directionType::rev, 100, velocityUnits::pct);
    } else {
  intakeL.spin(directionType::fwd, 0, velocityUnits::pct);
  intakeR.spin(directionType::fwd, 0, velocityUnits::pct);
}

//-----------------------------------------------------------------------------
```

In the code snippet above, the buttons that were used can be seen. The driver requested that the button to intake in was R1 and the button to intake out was R2.

The left and right intakes were set to spin inwards at a speed of 100% whenever the button R1 was currently pressing. The intakes were set to spin outwards at a speed of 100% whenever the button R2 was currently pressing. If neither button was being pressed, the speed would be set to 0%.

Design Process: Test - Front Intake

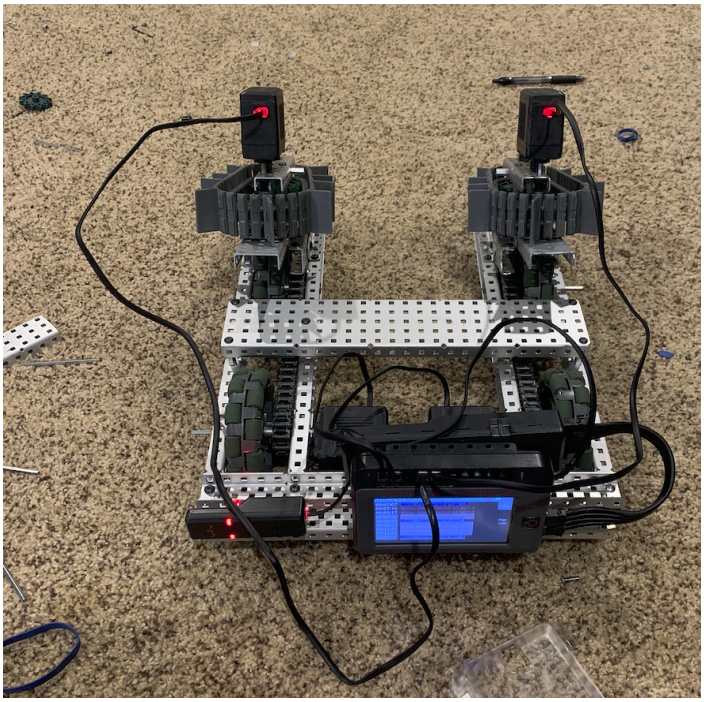

The chassis continued to drive easily. Without the battery dragging along the side of the chassis, there was less resistance to movement.

The front intakes struggled to pick up the balls mainly due to the fact that the intakes were placed slightly higher than the center of the ball. As a result, it was more difficult for the intakes to pick the balls up at that height since the intakes were spaced the diameter of the balls.

Furthermore, with the intakes angled as much as they were, it became difficult for the balls to be pulled up. Instead, the balls would drop from the intake's hold.

Unfortunately, in order to make this intake design work, the intakes would need to be lowered slightly and angled less. This can not occur because the intakes would hit the top of the wheels.

As a result of these complications, the design for this intake needed to be scrapped.

Signature: Emma Meihfoer		Date: 06/15/2020
Disclosed and Understood by: Charles Spehl	Date: 06/15/2020	PROPRIETARY INFORMATION

Design Process: Build - Day 4: Front Intake

The new concept for the front intakes is to make them smaller and have them attached to a moveable c-channel, rather than mounted on the chassis.

After disassembling the existing intake designs, smaller sprockets were attached to the end of c-channels. Treads were run around the sprockets and a motor was attached through the larger back sprocket and the c-channel. This c-channel was attached to the front of the chassis.

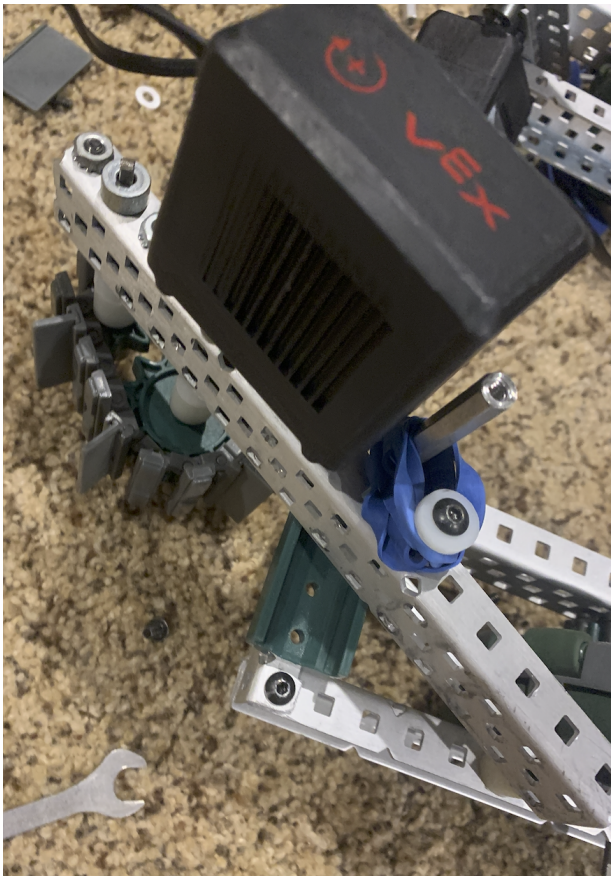

In the image above, it is seen that the size of the intakes was significantly decreased in order to keep the intakes low to the ground, providing it with the ability to more efficiently pick up balls. Furthermore, this size of the intakes allows the robot to stay within the 18 inch parameters. The c-channel that the intakes were attached to were spring loaded with a rubber band to allow the intakes to have a margin of error when picking up the balls. The team was concerned that this design may be too small to properly function.

Signature: Emma Meihfoer		Date: 06/17/2020
Disclosed and Understood by: Alex Daichendt	Date: 06/17/2020	PROPRIETARY INFORMATION

Design Process: Test - Front Intake

The robot was found to be within the size constraints of an 18 inch cube.

The chassis continued to drive properly, as expected.

The intakes were positioned at just the right height to pick up the balls, but the intakes were too small. As a result, the distance between the two intakes was larger than the diameter of the ball. This allowed the ball to slip out of the grip of the intakes.

In addition, the intakes were so small that they were unable to have the surface area to get a good grip on the ball. As a result, the robot was unable to pick up the ball.

The angle of the intakes proved to continue to be too large. The ball ended up slipping out of the intake's grip when it moved towards the back.

Overall, the test showed that a miniscule intake would not function properly to achieve our game goals. A large intake must be constructed, but this intake must be made with the ability to be moved or tucked away, in order to fit within size constraints.

Signature: Emma Meihfoer		Date: 06/17/2020
Disclosed and Understood by: Charles Spehl	Date: 06/17/2020	PROPRIETARY INFORMATION

Design Process: Build - Day 5: Chassis and Front Intake

The bar in the center of the chassis that was predicted to be a future hindrance to picking up balls was removed. Instead, smaller 5-wide plates were attached to each side of the chassis. These plates effectively hold the frame around the wheels together while staying out of the way of balls.

The new intake design incorporated the ideas of a larger intake and a space saver.

Two sprockets, a large one and a small one were attached to a c-channel. Next, a motor was attached to the larger sprocket in the back. After that, treads with flaps spaced three treads apart were attached to the sprockets. These c-channels were attached to a hinge at the front of the chassis.

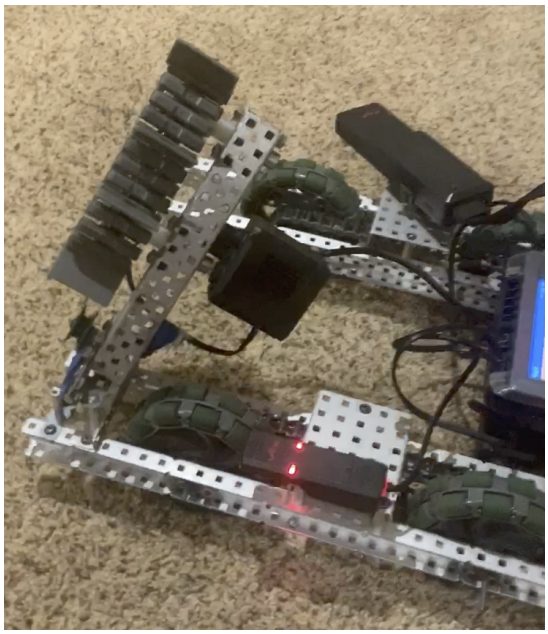

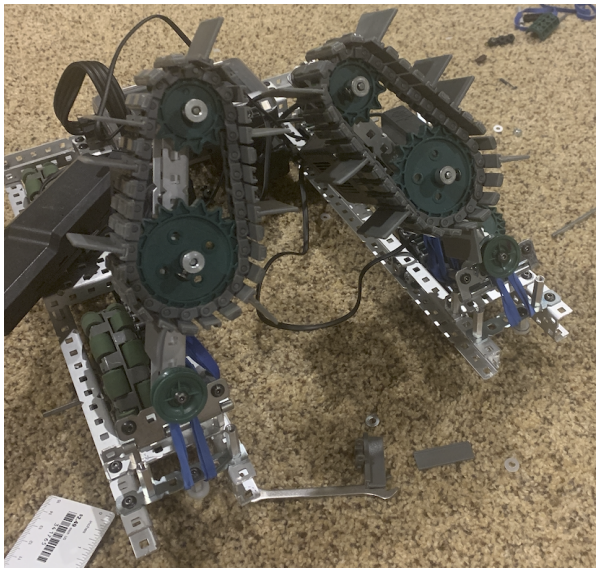

In the images above, it can be seen that the intake devices are now able to flip down, saving space and potentially working effectively.

By attaching the intake devices in this manner, we are able to position the intakes at a height equal to the center of the ball. This will make it easier to pick up the balls.

Signature: Emma Meihfoer		Date: 06/19/2020
Disclosed and Understood by: Alex Daichendt	Date: 06/19/2020	PROPRIETARY INFORMATION

Design Process: Test - Front Intake

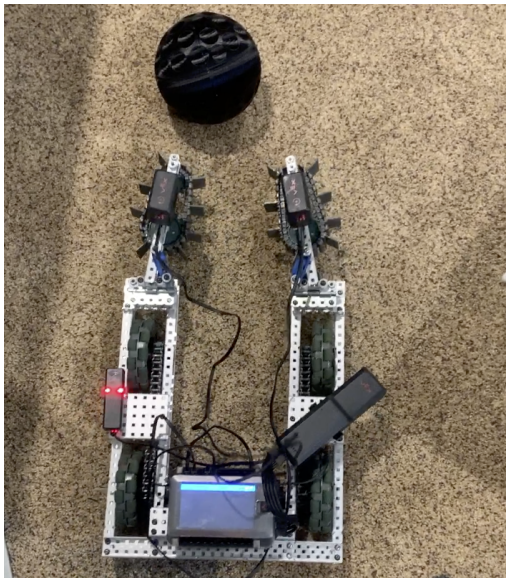

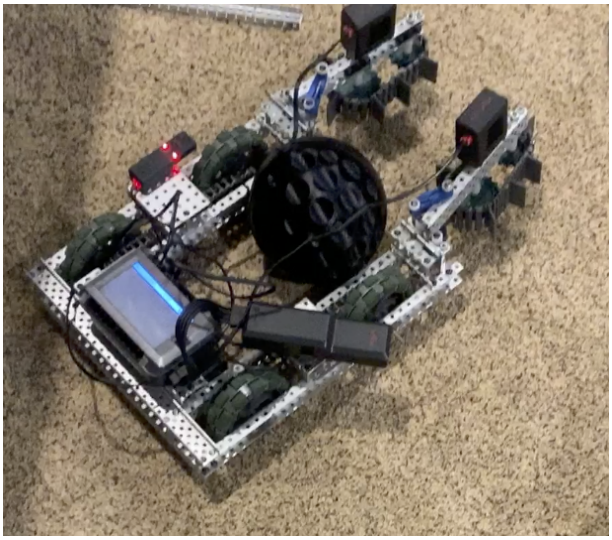

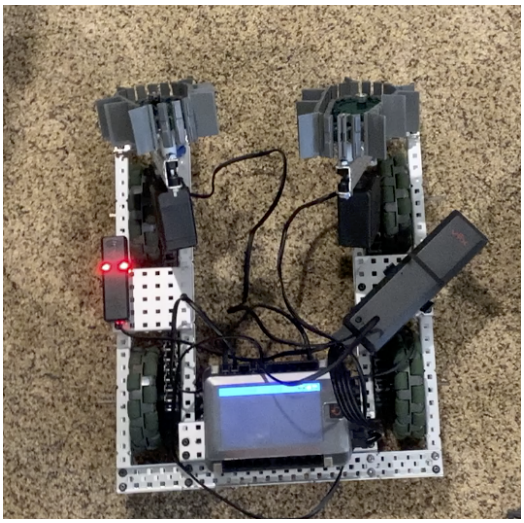

In the images above, it can be seen that the ball we are using to practice is not the official VEX ball. This ball is a replica ball that was 3D printed by one of the team members. This ball provides the team with a starting reference for building the robot, until we are able to purchase and receive the official VEX field set. This ball may vary slightly from the official VEX ball, therefore, the robot must be adaptable.

The intakes were capable of easily picking up the balls. This appears to be an extremely successful design.

Signature: Emma Meihfoer		Date: 06/19/2020
Disclosed and Understood by: Charles Spehl	Date: 06/19/2020	PROPRIETARY INFORMATION

Design Process: Build - Day 6: Central Intake and Flywheel

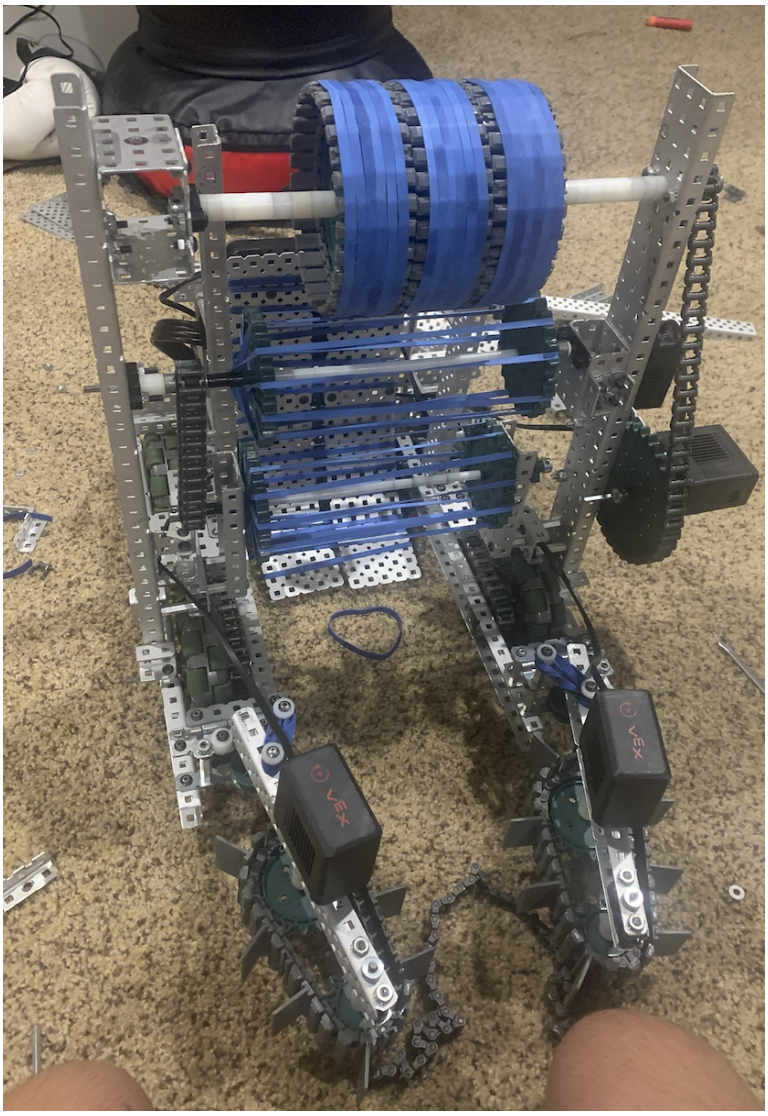

In the image to the left, the central intake and flywheel design can be seen. This prototype was constructed rapidly over the course of a single day, resulting in many inconsistencies in the build.

First, two c-channels were attached vertically to the front sides of the chassis. Next, axles were run through these two c-channels with sprockets attached to them. Rubber bands were attached to connect two sprockets on each axle, forming the central intake. A sprocket was attached on the outside of this device with a chain to connect the two central intakes, in order to make them function with one motor.

Another axle was run through the top of the two vertical c-channels. Three flywheels, which are sprockets with flat treads and rubber bands, were added to the top of this flywheel, forming a launching device for the balls. These flywheels were connected to the central intake with sprockets and chains in order to have them use the same motor.

Two curved plates were added to the back of the chassis. This provides a ramp for the balls to move up. These plates had rubber bands attached to them, providing the balls with grip.

The central intake will be able to grab the balls that are pulled in with the front intake and pull it up the robot, before it is shot out with the flywheel.

Signature: *Emma Meihfoer*		Date: 06/20/2020
Disclosed and Understood by: *Alex Daichendt*	Date: 06/20/2020	PROPRIETARY INFORMATION

Design Process: Program - Day 3: Central Intake and Flywheel

```
//---------------------------Intake Code-------------------------------------------

if(Controller1.ButtonR1.pressing()) {
  intakeL.spin(directionType::fwd, 100, velocityUnits::pct);
  intakeR.spin(directionType::fwd, 100, velocityUnits::pct);
  mainspin.spin(directionType::fwd, 100, velocityUnits::pct);
} else if(Controller1.ButtonR2.pressing()) {
  intakeL.spin(directionType::rev, 100, velocityUnits::pct);
  intakeR.spin(directionType::rev, 100, velocityUnits::pct);
  mainspin.spin(directionType::rev, 100, velocityUnits::pct);
} else {
  intakeL.spin(directionType::fwd, 0, velocityUnits::pct);
  intakeR.spin(directionType::fwd, 0, velocityUnits::pct);
  mainspin.spin(directionType::undefined, 0, velocityUnits::pct);
}

//-----------------------------------------------------------------------------
```

The image above shows the altered intake code that accounts for the central intake, it is just an addition to the previous intake code that makes them spin inwards or outwards.

```
//---------------------------Fly Wheel---------------------------------------------

if(Controller1.ButtonL2.pressing()) {
      flywheelL.spin(directionType::fwd, 45, velocityUnits::pct);
       flywheelR.spin(directionType::fwd, 45, velocityUnits::pct);
    }
else if(Controller1.ButtonL1.pressing()){
      flywheelL.spin(directionType::fwd, 100, velocityUnits::pct);
       flywheelR.spin(directionType::fwd, 100, velocityUnits::pct);
} else if (Controller1.ButtonDown.pressing()) {
      flywheelL.spin(directionType::rev, 100, velocityUnits::pct);
       flywheelR.spin(directionType::rev, 100, velocityUnits::pct);
}
else {
  flywheelL.spin(directionType::undefined, 0, velocityUnits::pct);
  flywheelR.spin(directionType::undefined, 0, velocityUnits::pct);
}

//-----------------------------------------------------------------------------
```

The image above shows the flywheel control code, which the driver requested to be set to button L1,L2, and the down arrow. The down arrow is used to spin the flywheel backwards, L1 is used to spin the flywheel full speed, and L2 spins the flywheel at 45% speed, which is a slower speed for close scoring.

Signature: *Charles Spehl*		Date: 06/21/2020
Disclosed and Understood by: *Emma Meihfoer*	Date: 06/21/2020	PROPRIETARY INFORMATION

Design Process: Test - Central Intake and Flywheel

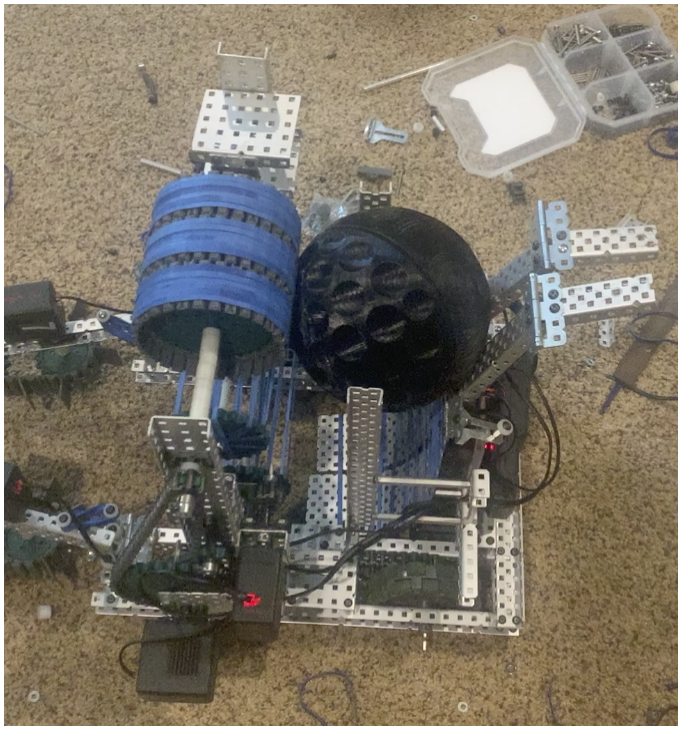

The chassis drove properly and the front intakes were able to pop out and pick up the ball correctly.

The central intakes were able to grab the ball and pull it up the ramp. There were a few times when the ball got caught in the negative space between the front intakes and the central intakes. At those moments, the central intake could not pick up the ball, but when the robot was driven forward slightly, the central intake was able to properly pick up the ball.

After the central intakes pulled the ball up the ramp, the flywheel was unable to move the ball. The ball got caught between the flywheel and the ramp. There was too much space between these two objects, causing the ball to lack the pressure against the ramp to be shot out by the flywheel. Furthermore, the flywheel was not able to aim the ball due to the fact that there was no object or mechanism in place to allow the ball to be aimed.

Unfortunately, the whole robot appeared to be extremely unstable. When the flywheel spun, it was going so fast that the Chassis and intakes shook vigorously. This is a concern because it could cause parts to fall out or the robot to stop functioning.

Signature: Emma Meihfoer		Date: 06/21/2020
Disclosed and Understood by: Charles Spehl	Date: 06/21/2020	PROPRIETARY INFORMATION

Design Process: Build - Day 7: Central Intake Disassembly

Knowing how unstable the robot is when the flywheel is spun, we plan to disassemble everything but the chassis and front intakes and rebuild it in a more sturdy manner.

We intend to put far more c-channels and stand offs lining the sides of the robot to provide improved stability.

Moreover, the sides of the central intake and flywheel will be moved inward. This will provide a more narrow space for the ball to travel through, therefore, providing better aim and fewer inconsistencies in the movement of the ball.

Adding to the concept above, one of the flywheels will be removed, meaning there will be two flywheels aiming the ball, instead of three. This will allow the ball to be moved in a more precise manner, rather than allowing the ball to freely move from side to side across three flywheels.

Today, the flywheel was disassembled and one of the sprockets was pulled apart.

Signature: Emma Meihfoer		Date: 06/24/2020
Disclosed and Understood by: Alex Daichendt	Date: 06/24/2020	PROPRIETARY INFORMATION

July Schedule Breakdown

	July															
	1	2	3	4	5	6	7	8	9	10	11	12	13	14	15	16
Central Intake																
Central Intake Test																
Central Intake Redesign																
Flywheel																
Flywheel Test																
Flywheel Redesign																
Hood																
	17	18	19	20	21	22	23	24	25	26	27	28	29	30	31	
Central Intake																
Central Intake Test																
Central Intake Redesign																
Flywheel																
Flywheel Test																
Flywheel Redesign																
Hood																

Signature: *Emma Meihfoer*		Date: 07/01/2020
Disclosed and Understood by: *Eduardo Cea*	Date: 07/01/2020	PROPRIETARY INFORMATION

Design Process: Build - Day 8: Central Intake Disassembly

The bottom central intake of two sprockets was disassembled and the c-channels were removed from the sides of the chassis. Next, the back ramp was removed.

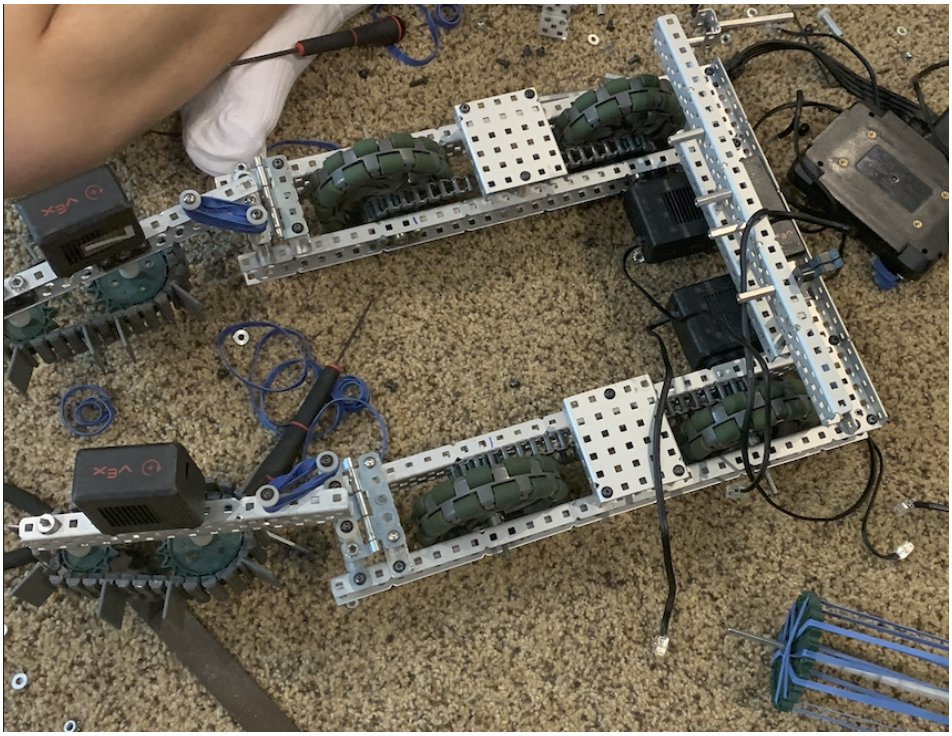

In the image above, the finished product of disassembling the central intake is shown.

The central intake, flywheel, and ramp will be rebuilt with more precision and increased stability.

An additional bar was added across the back of the chassis with standoffs.

Signature: Emma Meihfoer		Date: 07/01/2020
Disclosed and Understood by: Alex Daichendt	Date: 07/01/2020	PROPRIETARY INFORMATION

Design Process: Build - Day 9: Central Intake

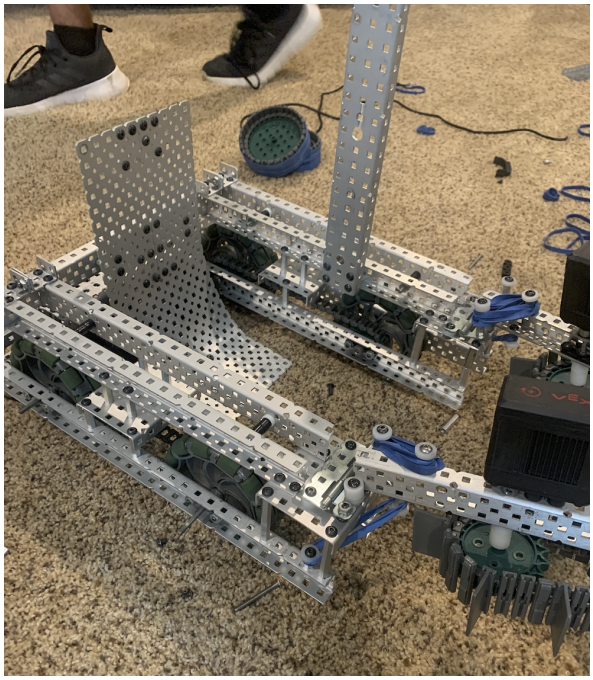

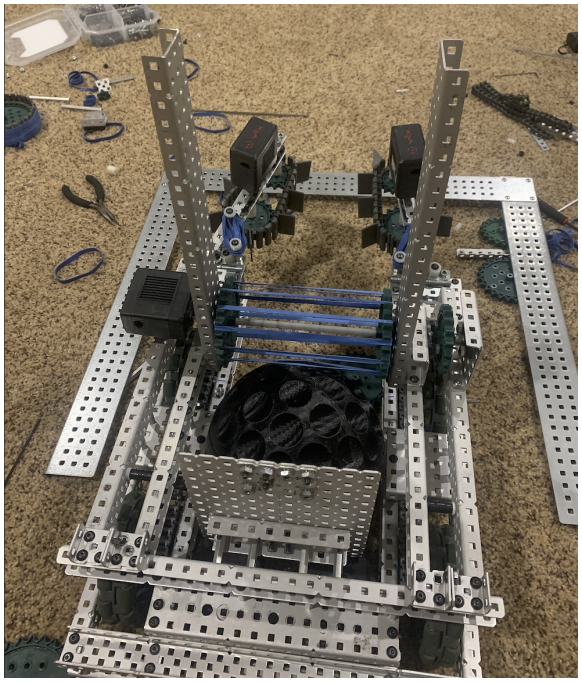

In order to rebuild the robot to be more structurally sound, the first item we focused on was the ramp. The two plates were lined up next to each other and attached evenly to the chassis. This provides fewer inconsistencies in the direction that the ramp will guide the balls.

More c-channels were attached horizontally above the chassis, mimicking the shape of the chassis. These c-channels were attached with stand offs.

Next, two c-channels were attached vertically to the inside sides of the chassis. This provides a narrower space for the balls to be guided through.

After attaching the vertical c-channels, an axle was run through the c-channels. On this axle, two sprockets were placed between the vertical c-channels and connected with rubber bands. Spacers were used to space the two sprockets instead of collars for more security. If a collar were to break, the sprockets would pull together and the robot would not be able to pick up balls anymore. On one end of the outside of this axle, another sprocket was attached. This sprocket will have a chain around it to connect it to the next central intake. On the other end of the outside of the axle, a motor and large sprocket is attached to spin the central intake and connect to the flywheel. A large sprocket is used on this end to create a high gear ratio between the motor and the flywheel, increasing the speed.

Signature: *Emma Meihfoer*		Date: 07/08/2020
Disclosed and Understood by: *Alex Daichendt*	Date: 07/08/2020	PROPRIETARY INFORMATION

Design Process: Build - Day 10: Central Intake

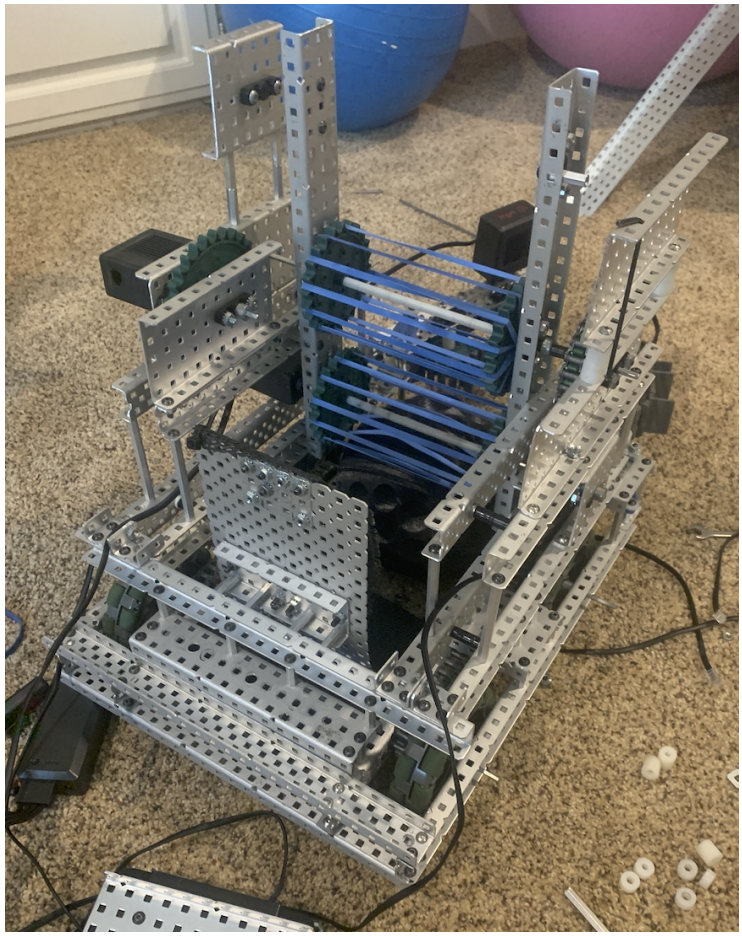

Another axle was run through the two vertical c-channels and two sprockets were placed between the vertical c-channels and connected with rubber bands. Spacers were used to space the two sprockets. On the outside end of the axles, a small sprocket was placed. This sprocket was connected to the other central intake sprocket with a chain.

The sides of the chassis were built up further, in order to guide the balls up the robot. These sides were built up by offsetting c-channels and 5-wide pieces with standoffs. Another motor and sprocket was attached to the side of the robot. This sprocket will be connected to the flywheel. The sprocket attached is very large and the one that will be attached to the flywheel will be small in order to create a higher gear ratio, meaning the flywheel will be able to spin faster, allowing it to shoot out the balls.

Mesh was added to the ramp to provide the ramp with more traction for the ball to move up.

Signature: Emma Meihfoer		Date: 07/10/2020
Disclosed and Understood by: Alex Daichendt	Date: 07/10/2020	PROPRIETARY INFORMATION

Design Process: Build - Day 11: Flywheel

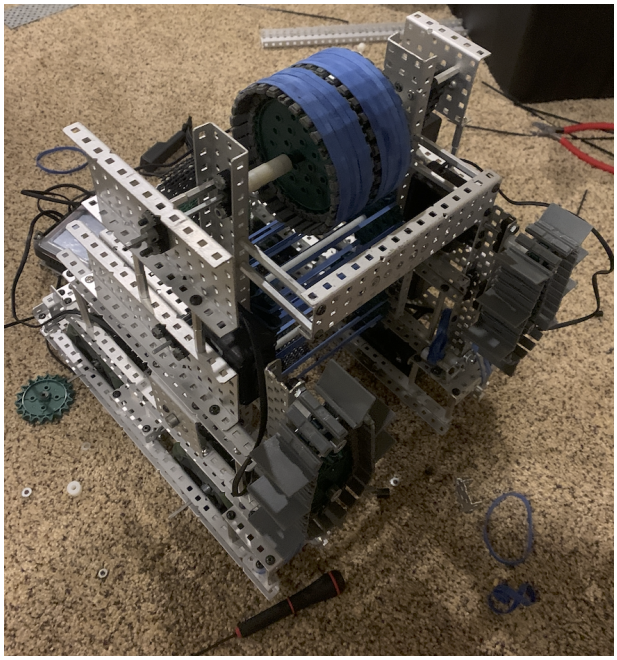

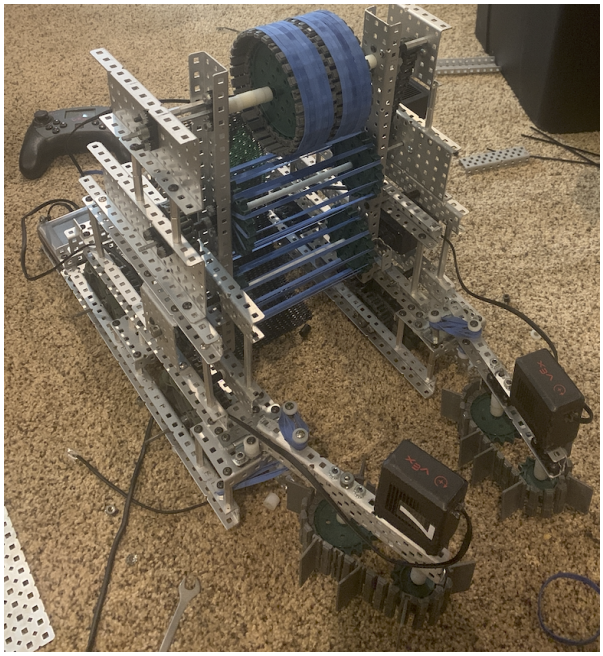

An additional axle was run through the two vertical c-channels. Two sprockets with treads and rubber bands on them were centered on this axle. The sides of the axle were filled with spacers.

On one outside end of the axle that the flywheel is on, a small sprocket was attached. A chain was run from this sprocket to the larger one connected to a motor. This difference in size creates a gear ratio that allows the flywheel to spin faster. Since the flywheel can spin faster, it will be stronger and be able to shoot further.

The top of the robot comes extremely close to 18 inches. We will have to make sure any additional parts do not make the robot any taller.

A front bar was added in front of the flywheel by using standoffs. This bar will be used to create an aimer for the balls.

Signature: Emma Meihfoer		Date: 07/12/2020
Disclosed and Understood by: Alex Daichendt	Date: 07/12/2020	PROPRIETARY INFORMATION

Design Process: Test - Central Intake and Flywheel

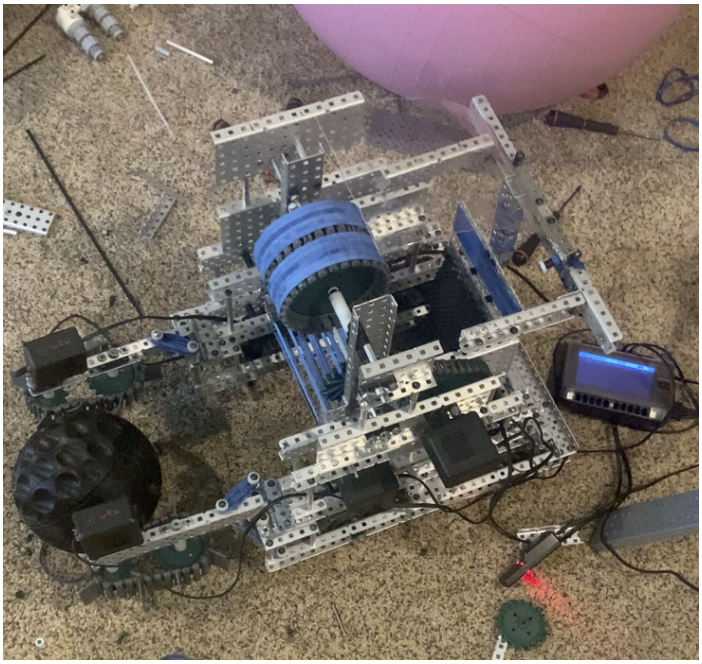

A temporary hood was attached. This hood was created by attaching a piece of plexiglass from the back of the robot to the top. This hood is not usable due to the fact that it causes the robot to become over 18 inches, so we will be creating a hood that moves up and does not bring the robot past 18 inches. This hood is being used purely for the reason of seeing if the flywheel is able to shoot the ball forward.

The ramp guiding the ball up the robot drags slightly on the carpet. As a result, it is more difficult for the chassis to drive. We believe this will not be an issue when we are driving on the VEX field due to the fact that the ground is consistent and level, rather than bumpy and inconsistent. With this in mind, the concern over whether or not the front intakes will be able to still pick up the balls when the ground is no longer carpet was brought up. The ball may be easier to pick up right now with the carpet since it doesn't roll around as much.

The central intakes were able to effectively pull the ball up the robot to the flywheel. It took a couple of seconds for the flywheel to spin up fast enough to shoot the ball, but when it did, it was able to shoot the ball a decent distance. It is mildly concerning that the flywheel takes so much time to speed up to the speed needed. While looking into this issue, we found we were using a green motor cartridge. In order to more effectively spin up the flywheel, we will order a blue motor cartridge.

Signature: Emma Meihfoer		Date: 07/14/2020
Disclosed and Understood by: Charles Spehl	Date: 07/14/2020	PROPRIETARY INFORMATION

Design Process: Build - Day 12: Hood

A hood deployment mechanism was created to push the hood from level to the top of the robot to upright. The mechanism was created by having 2 separate gears on an axle, with one free spinning and the other spinning with the axel. There is a rod spring loaded out and another rod that holds the 2 gears together. Whenever there is a hole for the second axle to go through, it shoots out, unlocking the two gears and letting the axle spin without the gear that the arm is attached to.

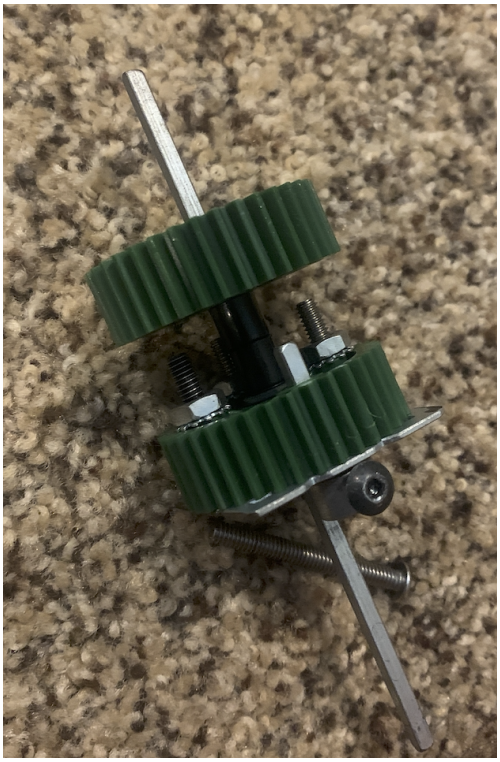

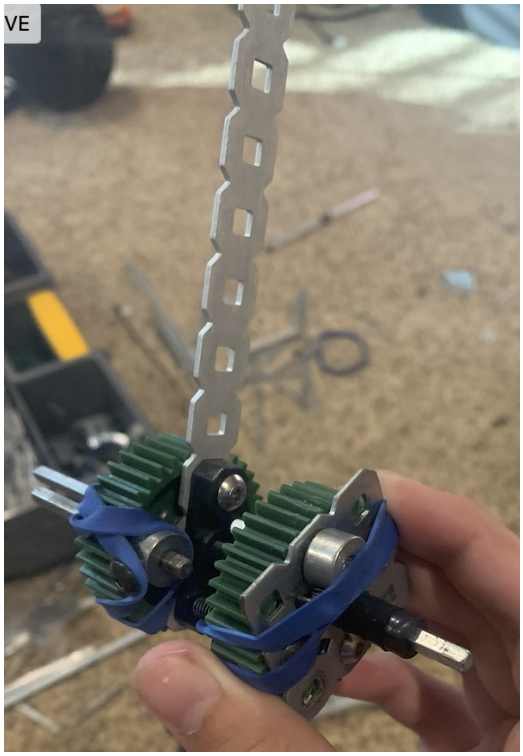

The image above shows the hood deployment mechanism.

In the image above, the first hood deployment mechanism was built. It consists of a spring loaded pin that will lock the arm holding the hood once it is vertical. It allows for the hood to travel upwards using the power from the flywheel, then once it is vertical, the flywheel would spin independently of the hood arm.

Signature: Emma Meihfoer		Date: 07/14/2020
Disclosed and Understood by: Alex Daichendt	Date: 07/14/2020	PROPRIETARY INFORMATION

Design Process: Test - Hood

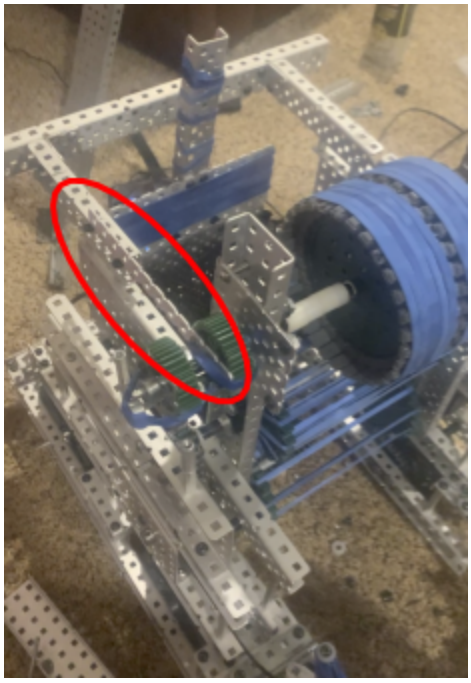

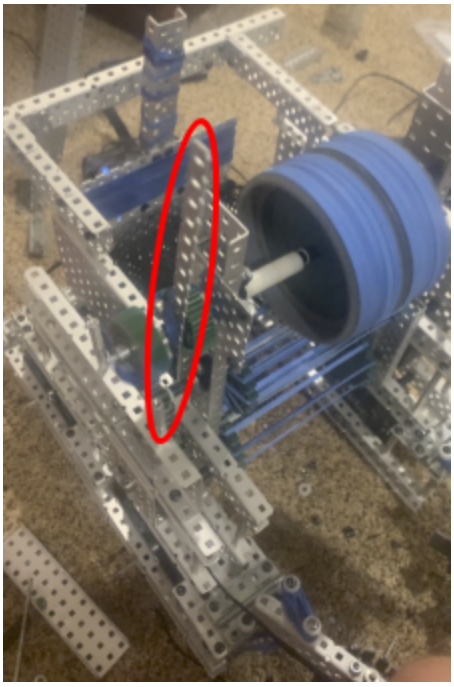

In the image to the left, the circled part is the bar that will be used to pull the hood up. This bar is in position before the robot has started moving.

In the image to the right, the circled bar has popped up vertically. When the flywheel began to spin, the pin popped out and the hood popped up. Although this mechanism was able to successfully complete its task, it took a few tries and way too much time for the pin to pop out and the hood to pop up.

This could prove to be a difficult and time consuming task when driving the robot and performing autonomous. As a result, the mechanism will need to be improved or changed, but we will fully build up the hood to double check and make sure it is working properly.

Signature: Emma Meihfoer		Date: 07/14/2020
Disclosed and Understood by: Charles Spehl	Date: 07/14/2020	PROPRIETARY INFORMATION

Design Process: Build - Day 13 Hood

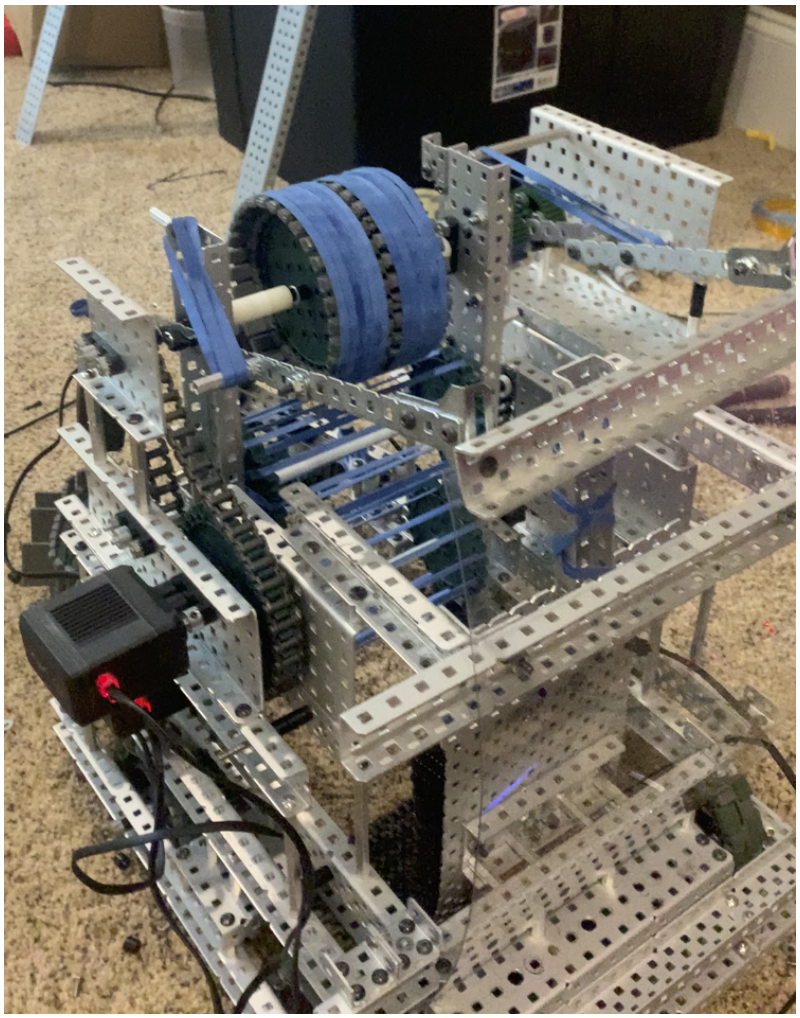

Another metal bar was added to the other side of the flywheel. This metal bar was connected to the other metal bar with a c-channel. The plexi-glass was attached to this c-channel and dropped down the back of the robot.

Two rubber bands were attached to each side of the hood. They were attached from the metal bar to the top of the ends of the flywheel. These rubber bands will constantly be pulling the hood to pop up. That way, the hood will pop up when the pin comes out.

Signature: Emma Meihfoer		Date: 07/15/2020
Disclosed and Understood by: Alex Daichendt	Date: 07/15/2020	PROPRIETARY INFORMATION

Design Process: Test - Hood

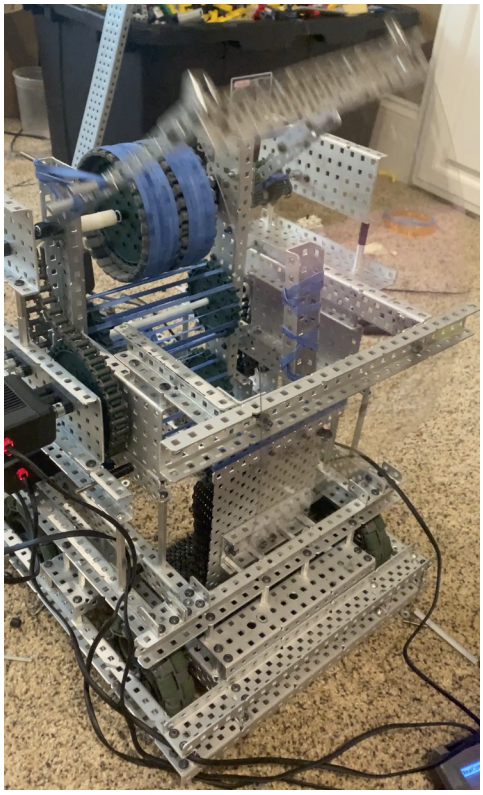

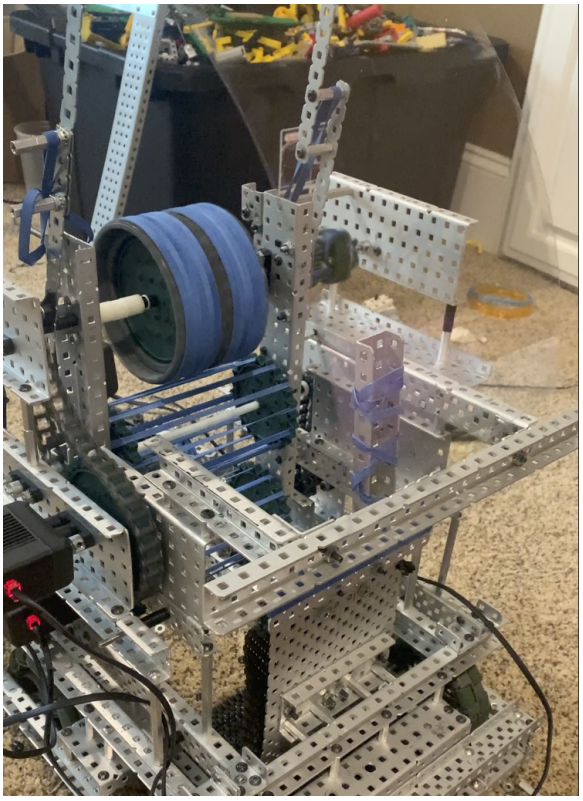

The images above are screenshots from the test video. Although this mechanism was able to lift up the hood, it was not optimal.

The mechanism for lifting the hood continued to be inconsistent. It took multiple tries before it popped the hood out. Not only was this an issue, it caused clicking and the flywheel took a longer time to spin up to speed.

The chassis appeared to be slightly struggling with the weight of the robot on top of it. After a few minutes of driving, the chassi motors began to feel hot.

The plexi glass was not actually attached to the back of the robot due to the fact that it would prevent the hood from moving up. As a result, the ball would move the plexiglass when it came up, making the shooting of the ball inconsistent due to the increased space between the plexiglass and the flywheel.

Signature: Emma Meihfoer		Date: 07/15/2020
Disclosed and Understood by: Charles Spehl	Date: 07/15/2020	PROPRIETARY INFORMATION

Design Process: Build - Day 14: Flywheel

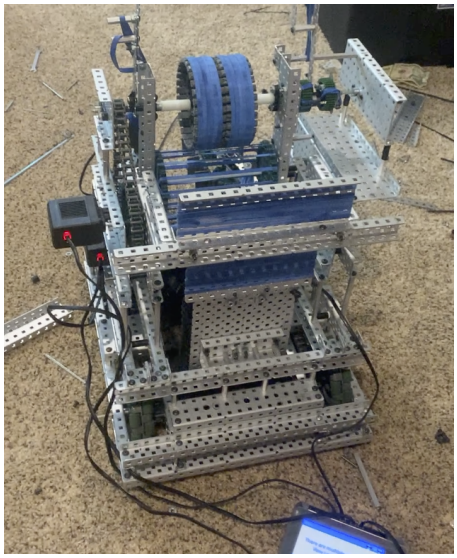

The blue motor cartridge that was ordered for the flywheel arrived.

The motor for the flywheel was removed from the robot. In the picture to the left, it can be seen that the green motor cartridge found in the flywheel motor was replaced with the blue motor cartridge.

With the blue motor cartridge, the rpm is increased to 600 rotations per minute, meaning the flywheel will be able to move much faster. In addition, the torque of the motor cartridge is much lower than the green motor cartridge.

After replacing the motor cartridge, the motor was reattached to the robot. We hope that the new motor cartridge will give the flywheel the increased speed to properly shoot balls, instead of just barely getting them over the flywheel. It is believed that the distance the balls will travel will be further.

Signature: *Emma Meihfoer*		Date: 07/16/2020
Disclosed and Understood by: *Alex Daichendt*	Date: 07/16/2020	PROPRIETARY INFORMATION

Design Process: Test - Flywheel

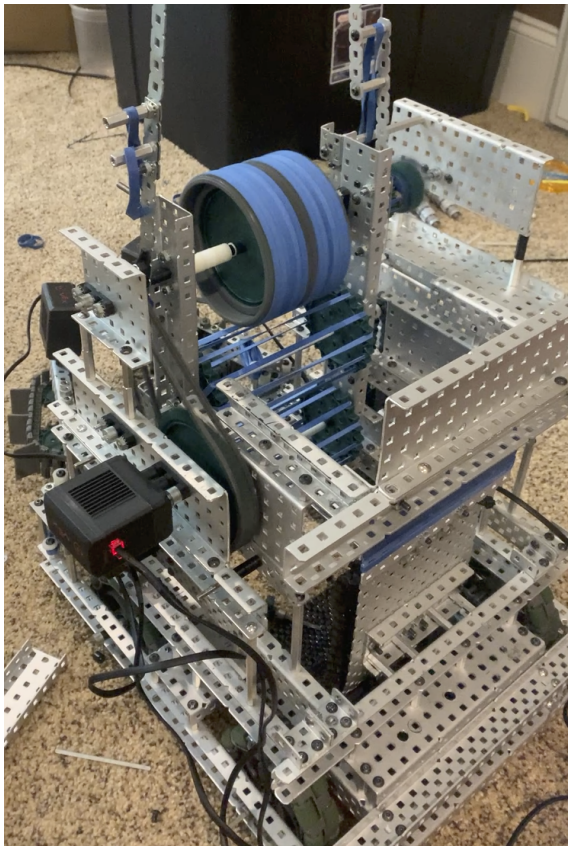

In the image above, it can be seen that the hood has popped up and the flywheel is spinning.

Due to the lower torque, the flywheel struggled more to lift up the hood before the pin popped out. The mechanism for pulling the hood up most definitely needs to be improved or changed, so it puts less strain on the flywheel.

It is good to see that the flywheel was able to spin up to a speed that was capable of shooting the ball further.

Signature: Emma Meihfoer		Date: 07/16/2020
Disclosed and Understood by: Charles Spehl	Date: 07/16/2020	PROPRIETARY INFORMATION

Design Process: Build - Day 15: Flywheel

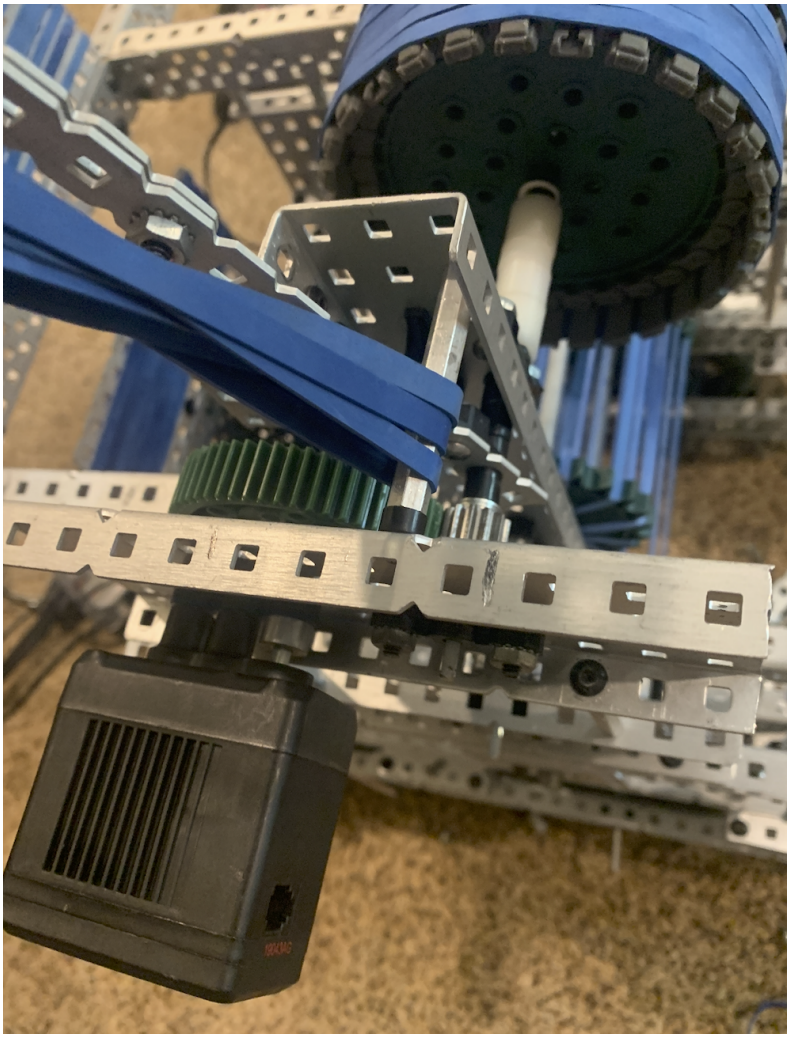

In order to solve the issue of there being too little torque to quickly spin the flywheel up to speed and pull up the hood, another motor with a blue motor cartridge was attached to the other side of the flywheel.

The additional motor was given the same gear ratio as the other motor, chain, and sprocket, attached to the flywheel. The addition of this motor allows both motors to work together to spin the flywheel, that way, there will be less stress on a single motor and the flywheel will be able to spin up in less time.

Signature: *Emma Meihfoer*		Date: 07/18/2020
Disclosed and Understood by: *Alex Daichendt*	Date: 07/18/2020	PROPRIETARY INFORMATION

Design Process: Test - Flywheel

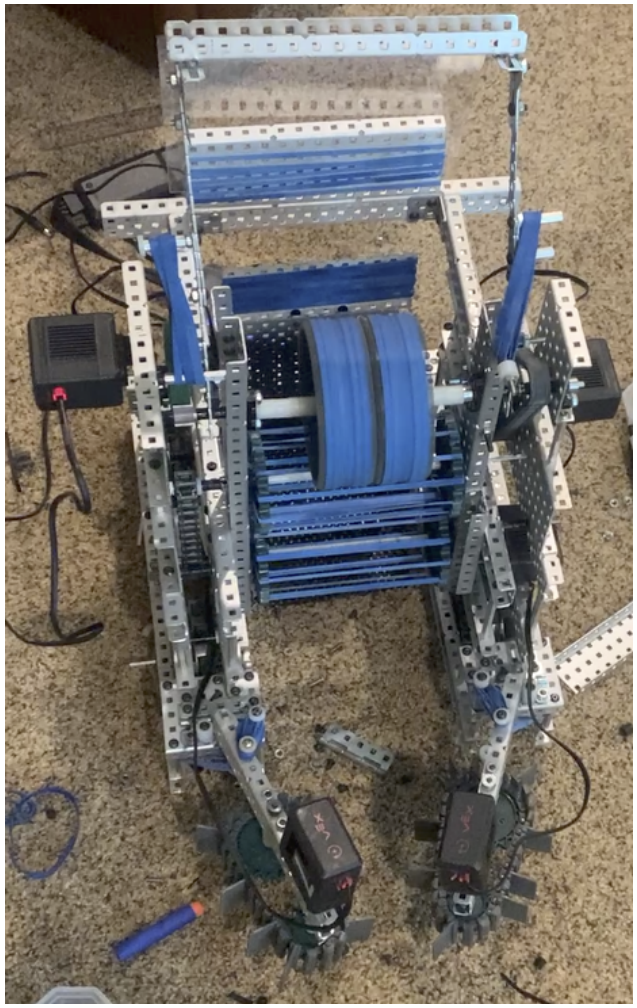

With the addition of another blue cartridge motor, the flywheel was able to spin up to speed easily. The flywheel no longer struggled due to a lack of torque to speed up. The inconsistencies of this issue with the flywheel were nearly eliminated.

Unfortunately, the flywheel still struggled to pull the hood up, finalizing the decision to change the mechanism for lifting the hood.

Signature: Emma Meihfoer		Date: 07/18/2020
Disclosed and Understood by: Charles Spehl	Date: 07/18/2020	PROPRIETARY INFORMATION

Design Process: Build - Day 15: Hood

A piece of mesh was attached to the top c-channel of the hood by screwing it in. The mesh was also attached to the back of the robot.

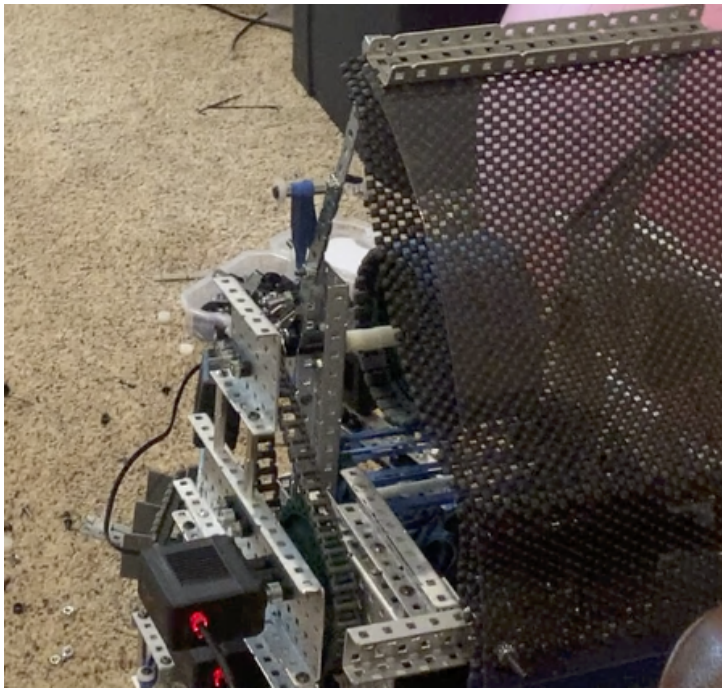

It is still unknown what the new hood lifting mechanism will be. Instead, today, we focused on improving the grip of the hood. We attached mesh in front of the hood. With the mesh in place, the balls will have more grip and traction when moving across the hood and towards the goal.

The addition of the mesh is focused more towards testing the shooting of balls than finalizing the hood design.

Signature: *Emma Meihfoer*		Date: 07/18/2020
Disclosed and Understood by: *Alex Daichendt*	Date: 07/18/2020	PROPRIETARY INFORMATION

Design Process: Test - Robot

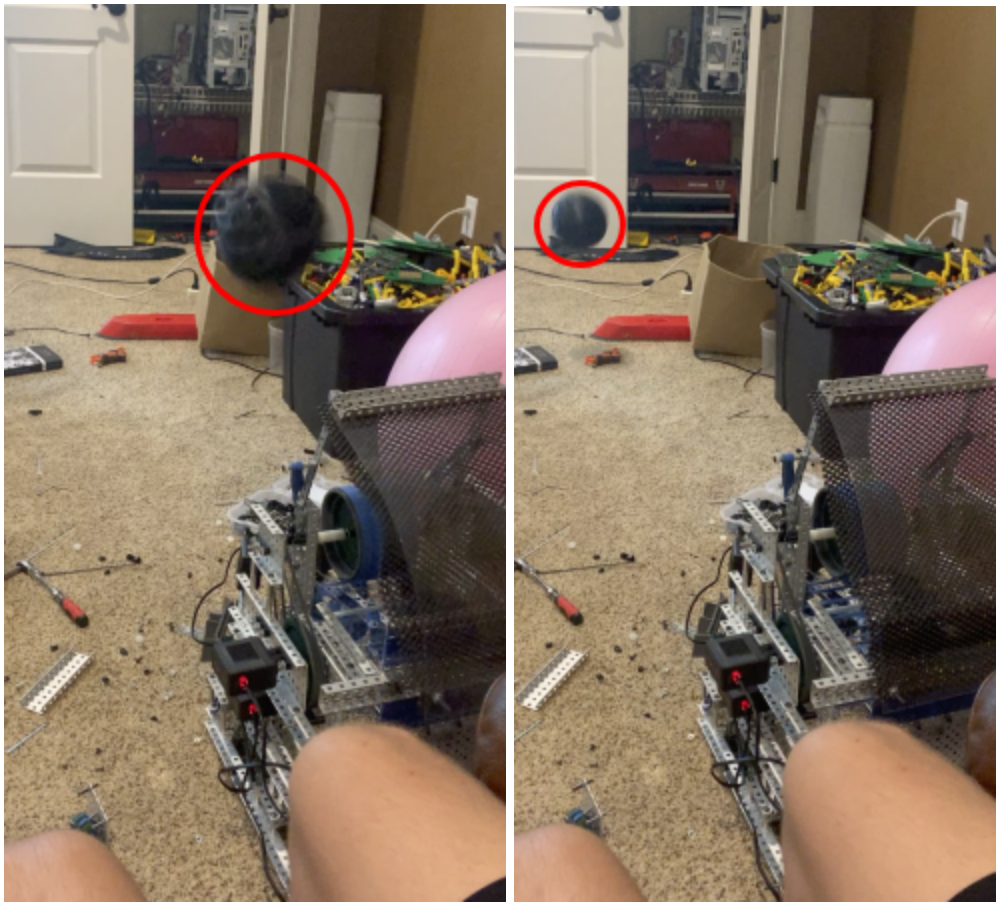

The chassis of the robot, the front intakes, and the central intakes continued to perform consistently. The flaps on the front intakes were hitting the ball, moving it to the side instead of picking it up.

With the addition of the mesh on the hood, the distance the flywheel was able to shoot the ball increased significantly.

The images above are screenshots from the test video. It can be seen that the ball traveled a relatively far distance. The motors with blue cartridges were able to significantly change how far the ball was shot. Overall, this was an extremely successful test.

Unfortunately, the hood is still unable to open on its own and no solution has been designed.

Signature: Emma Meihfoer		Date: 07/18/2020
Disclosed and Understood by: Charles Spehl	Date: 07/18/2020	PROPRIETARY INFORMATION

Design Process: Build - Day 16: Front Intake

Since the flaps of the front intakes were hitting the ball and moving it, so the robot was unable to pick up the ball, the front intake design was changed.

The intakes were changed to be circles. A sprocket and motor was attached on an axle to the front of a c-channel. Treads were wrapped around these sprockets and the c-channel was attached to the front to the chassis.

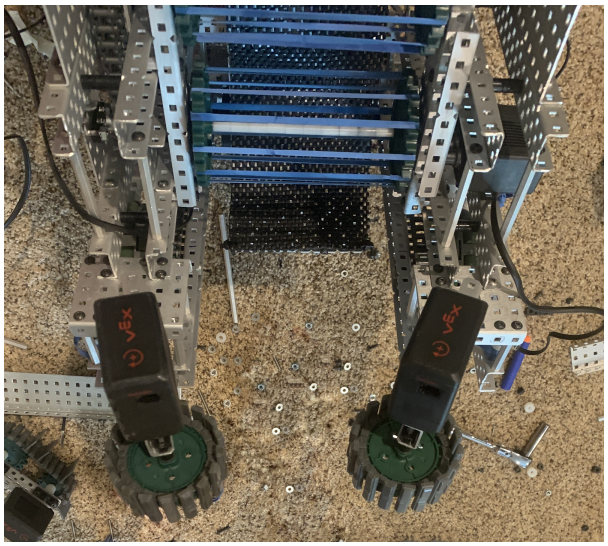

The new front intake design was created with the goal of more consistently and efficiently picking up the balls. Hopefully, without the flaps, the front intakes will not bounce the ball away and will be able to pick it up.

This front intake design is significantly smaller than the previous design. The end goal is to have a rubber band spring loaded to grip the ball, rather than relying on flaps. The spring loaded front intakes will allow the intakes to change the distance in between to match the ball as needed.

Furthermore, we will be able to twist the intakes to the side to tuck them away, so they can spring into place when the robot begins to move.

Signature: Emma Meihfoer		Date: 07/19/2020
Disclosed and Understood by: Alex Daichendt	Date: 07/19/2020	PROPRIETARY INFORMATION

Design Process: Build - Day 17: Front Intake

When attaching the c-channels to the chassis, a rubber band was attached from the c-channel to a rod on the chassis, as seen in the picture below. This rubber band allows the front intakes to be spring loaded.

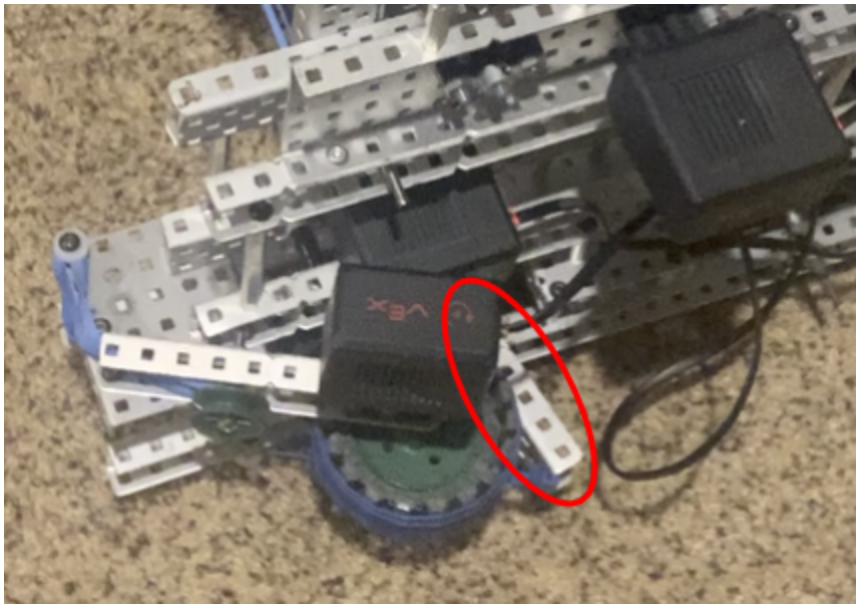

A little further down the chassis, a small c-channel was attached with a rubber band. Before the robot begins moving, the front intakes will be tucked into this c-channel, as seen in the picture above. When the robot begins to move, the front intakes will be spun, kicking them out to the front. This is a simple solution to minimizing the size while not using a motor.

Rubber bands were also added around the treads of the front intake. This allows the front intakes to have more grip when picking up balls.

Signature: Emma Meihfoer		Date: 07/20/2020
Disclosed and Understood by: Alex Daichendt	Date: 07/20/2020	PROPRIETARY INFORMATION

Design Process: Test - Front Intake

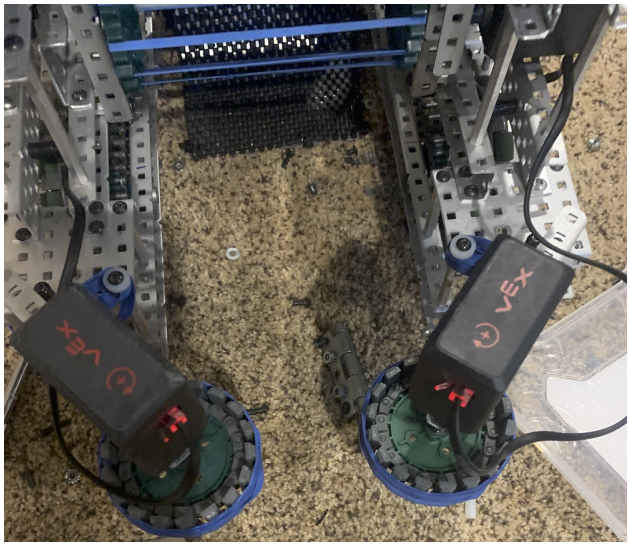

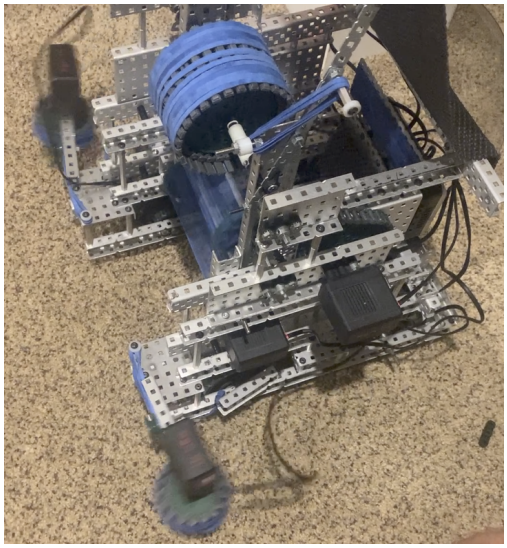

In the image to the right, it can be seen that the front intakes are able to easily deploy when the robot starts moving. This was a good solution for the issue of the robot being outside the 18 inch parameters.

The intakes were able to pick up the ball, but appeared to struggle slightly. It is possible that the robot may have only been able to pick up the ball due to the fact that it is on carpet.

The chassis, central intakes, and flywheel performed as expected.

Signature: Emma Meihfoer		Date: 07/20/2020
Disclosed and Understood by: Charles Spehl	Date: 07/20/2020	PROPRIETARY INFORMATION

Design Process: Build - Day 18: Flywheel Aimer and Hood

A concept that was decided by the team was to create an aimer. The idea was to make a ramp that would guide the ball at different angles when being shot.

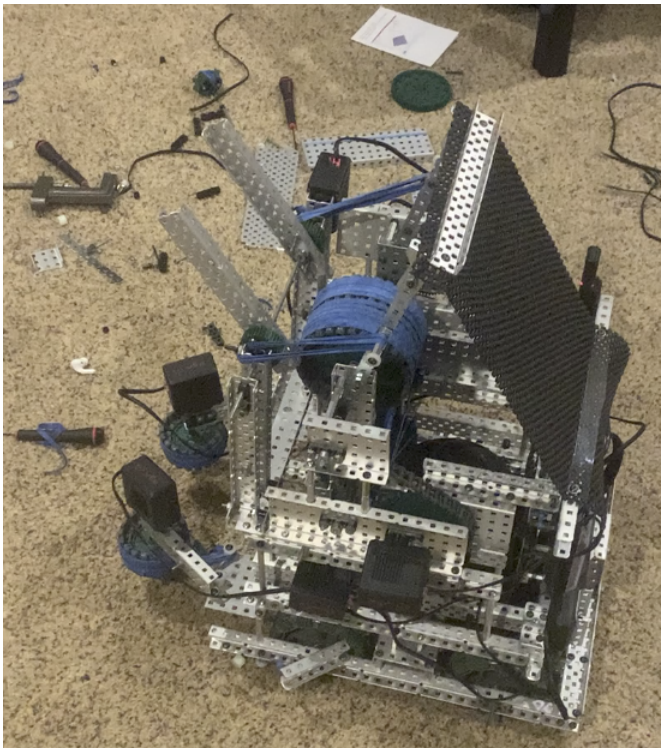

With the eighth motor available, we attached a long axle across the front of the robot. THis axle has two c-hannels along it that were held in place with collars.

Furthermore, the plexiglass on the hood was completely removed. Only the mesh was left. With the mesh in place instead of plexiglass, the hood was able to fold in upon itself, rather than loosely being attached to the back of the robot.

Rubber bands were run from the sides of the hood to the front of the robot, next to the ball aimer. This will continuously pull the hood to the upright position until a solution for holding the hood down temporarily is created.

Signature: Emma Meihfoer		Date: 07/22/2020
Disclosed and Understood by: Alex Daichendt	Date: 07/22/2020	PROPRIETARY INFORMATION

Design Process: Test - Robot

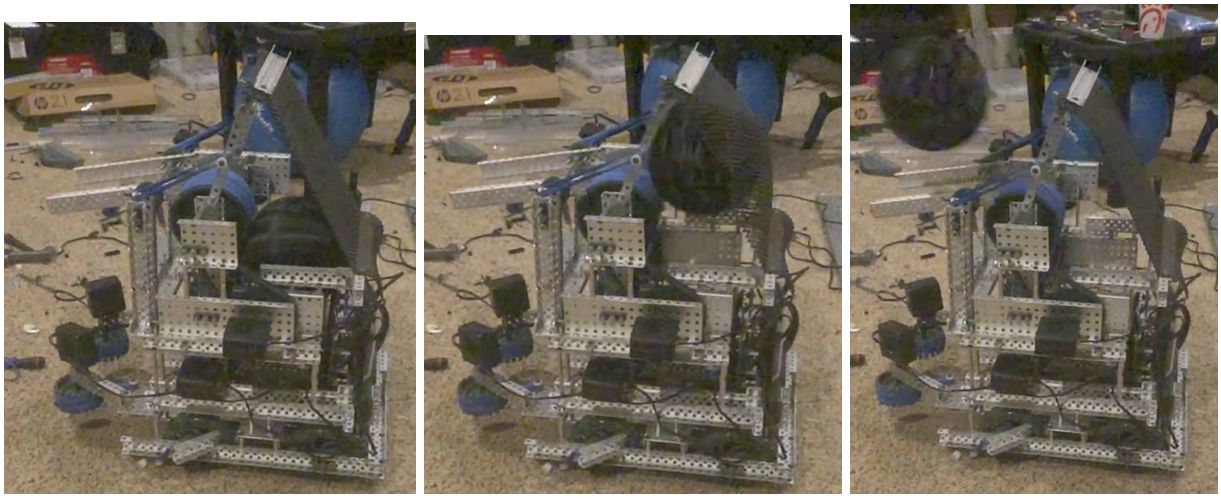

In the images above, the different stages of the ball being shot can be seen. The flywheel was able to successfully shoot the ball a far distance.

It is also seen that the flywheel shoots at a pretty high angle. This means the ball does not even touch the flywheel aimer that was created.

The angle that the flywheel aimer has to be at to guide the ball is so high that it slows down the ball and decreases the efficiency of shooting the ball.

The hood still has not been developed with a mechanism to hold it down and release it.

Signature: Emma Meihfoer		Date: 07/22/2020
Disclosed and Understood by: Charles Spehl	Date: 07/22/2020	PROPRIETARY INFORMATION

Design Process: Build - Day 19: Hood

A new design for creating a mechanism to hold down the hood and release it was designed. The concept of this design was to have a string hold down the hood of the robot, with the other end being wrapped around the flywheel gear.

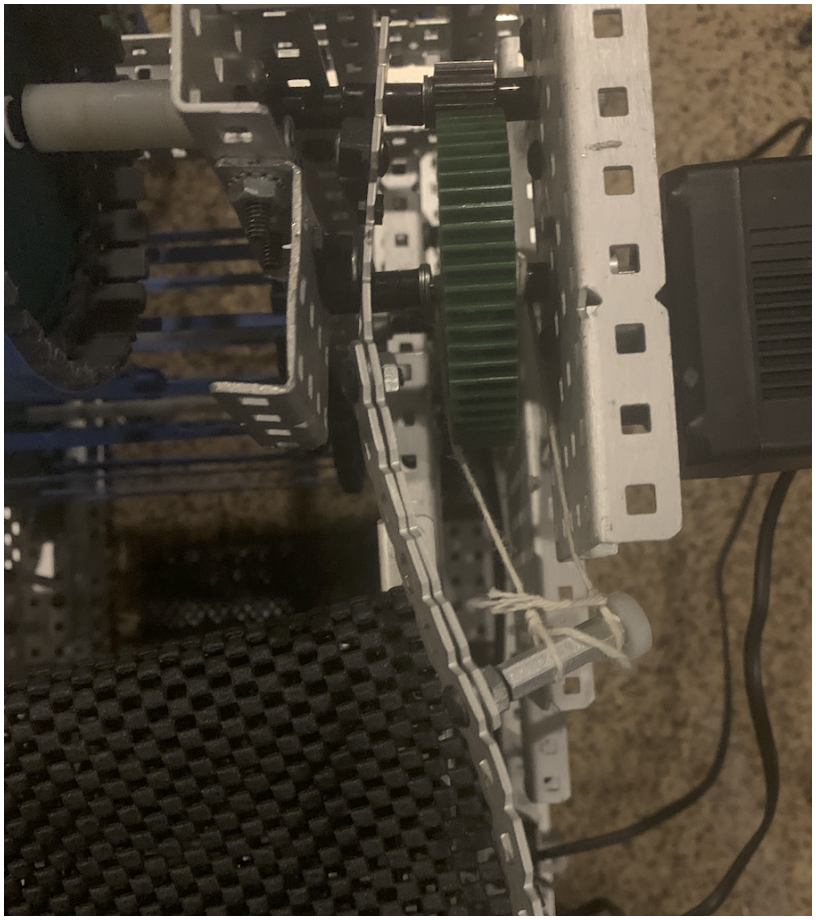

When this was created, as the string was being wrapped around the gear and brought down, the metal bar of the hood began to bend. The string was only on one side of the robot, meaning all the tension was pulling on this single bar. As a result, the bar bent, as seen in the picture above. This idea for releasing the hood was scrapped.

The bar on the hood were replaced with c-channels to make it stronger.

Signature: *Emma Meihfoer*		Date: 07/23/2020
Disclosed and Understood by: *Alex Daichendt*	Date: 07/23/2020	PROPRIETARY INFORMATION

August Schedule Breakdown

	August															
	1	2	3	4	5	6	7	8	9	10	11	12	13	14	15	16
Flywheel Aimer																
Robot Testing																
	17	18	19	20	21	22	23	24	25	26	27	28	29	30	31	
Central Intake Test																
Robot Testing																

Majority of the team is on vacation this month, so there are very few scheduled meetings, including the fifth and the twelfth, so relatively little work is planned to be done this month.

Signature: *Emma Meihfoer*		Date: 08/01/2020
Disclosed and Understood by: *Eduardo Cea*	Date: 08/01/2020	PROPRIETARY INFORMATION

Design Process: Build - Day 20: Hood Release mechanism and Flywheel Aimer Disassembly

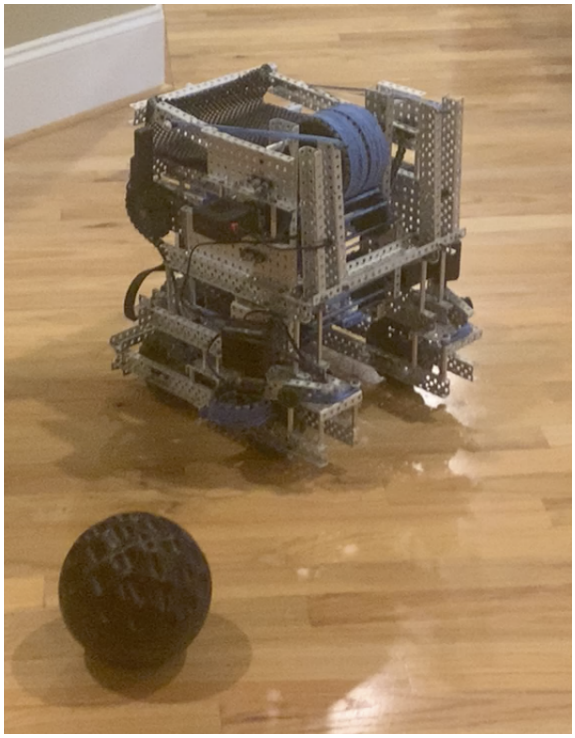

Due to the fact that the aiming flap on the robot was unnecessary, it was completely removed from the robot.

A new hood release mechanism was decided. This mechanism would have a chain that ran from the sprocket of the central intake to the very back of the robot, where a smaller sprocket was placed. The smaller sprocket had an axle run through it with a very small sprocket on it. A small rubber band will be attached from the very back of the hood to the small sprocket. When the robot starts to move, the central intakes will rotate, rotating the sprocket on the very back. As a result, the rubber band will spin off the small sprocket and the hood will pop up.

This hood release mechanism does not require any motors and efficiently completes its designated task.

Signature: Emma Meihfoer		Date: 08/05/2020
Disclosed and Understood by: Alex Daichendt	Date: 08/05/2020	PROPRIETARY INFORMATION

September Schedule Breakdown

	September														
	1	2	3	4	5	6	7	8	9	10	11	12	13	14	15
Chassis Redesign															
Chassis Test															
Front Intake Redesign															
Front Intake Test															
Hood Redesign															
Hood Test															
	16	17	18	19	20	21	22	23	24	25	26	27	28	29	30
Chassis Redesign															
Chassis Test															
Front Intake Redesign															
Front Intake Test															
Hood Redesign															
Hood Test															

Now that school has started, we will be working on Mondays and Thursdays, afterschool from four to five pm. As a result, we will have to slow down the pace due to shorter work periods.

Signature: *Emma Meihfoer*		Date: 09/01/2020
Disclosed and Understood by: *Eduardo Cea*	Date: 09/01/2020	PROPRIETARY INFORMATION

Design Process: Build - Day 21: Chassis

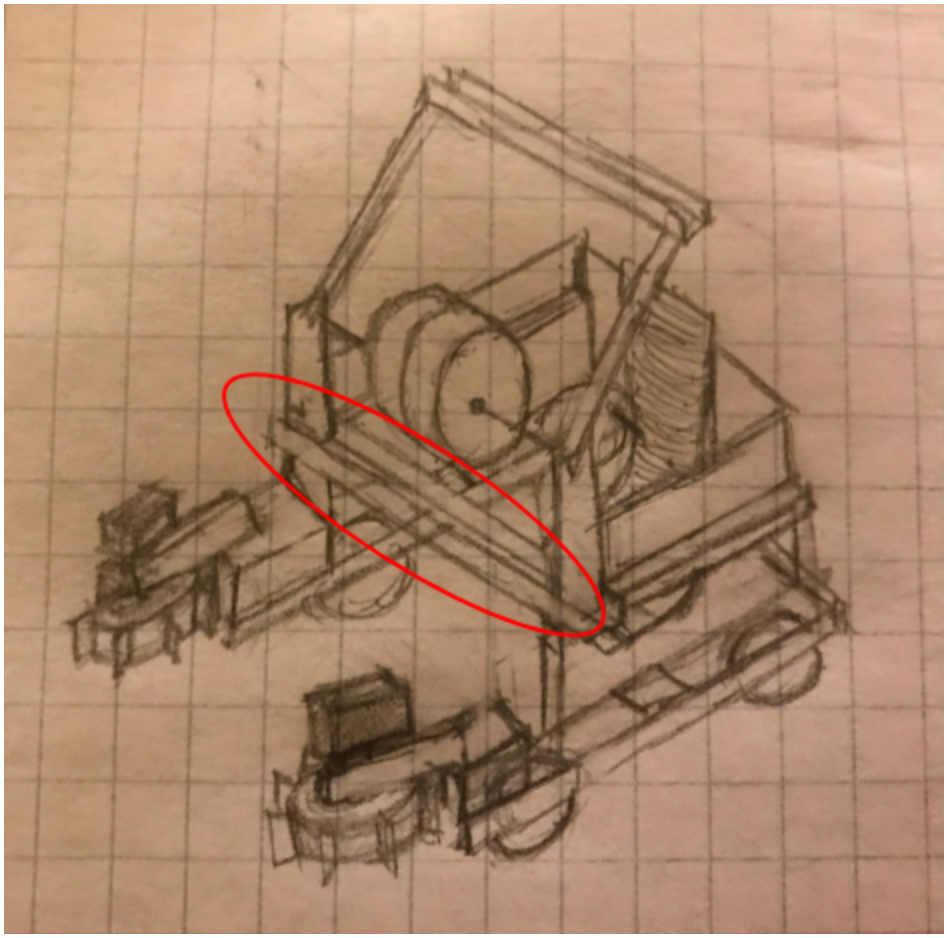

In the image above, the circled bar was removed. It was an unnecessary item that may block future changes to the intakes and other functions.

Signature: Emma Meihfoer		Date: 09/10/2020
Disclosed and Understood by: Alex Daichendt	Date: 09/10/2020	PROPRIETARY INFORMATION

Design Process Build - Day 22: Front Intake

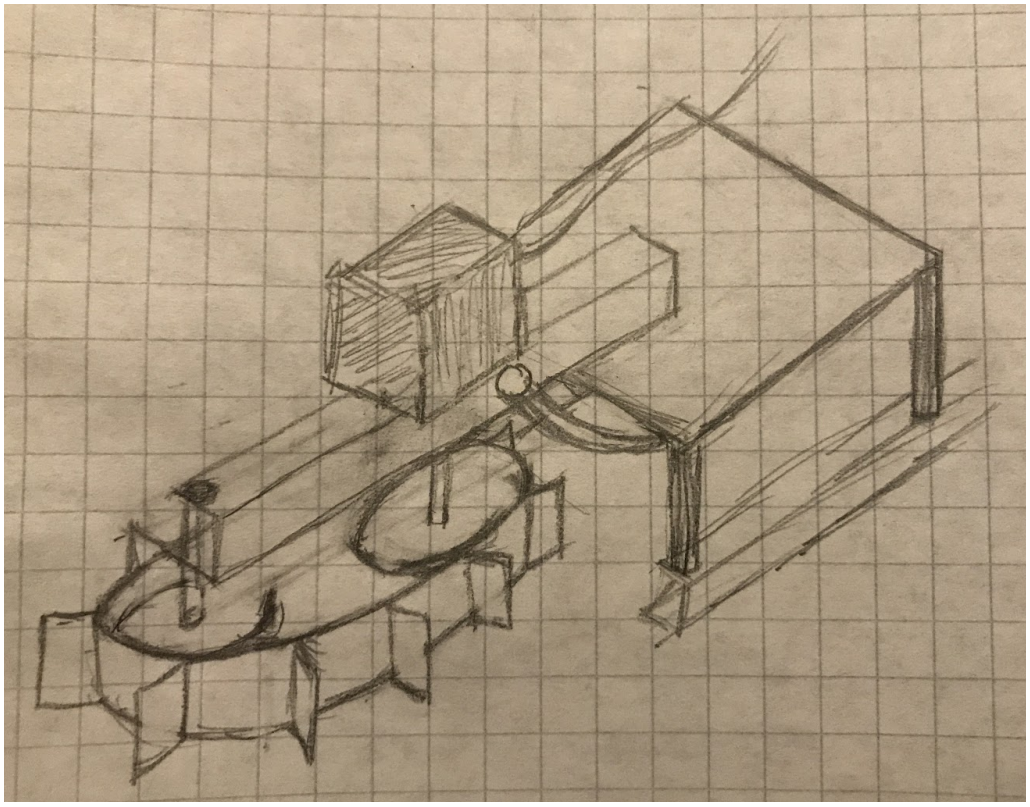

The image above depicts the goal of the new front intake. Instead of being a circle, the intake will form an oval. Hopefully, this will provide the intake with more grip when picking up balls.

Today, the old intake was removed. The front intake was detached from the robot. The circular front intake was removed from the c-channel it was attached to and two gears were placed there instead. The motor was attached to the back gear to keep it closer to the base of the robot, allowing it to stay within the 18 inch parameters.

The treads were attached around the two gears with the flaps on them for better grip on the balls.

Finally, the c-channel was re-attached to the plate of the robot. A rubber band was attached from the side of the c-channel to the bottom of the plate on the robot. This allows the front intakes to be held to the side of the robot before the competition starts, that way the robot can fit within the 18 inch parameters. When the robot moves, the rubber bands will allow the front intakes to bounce out.

Signature: *Emma Meihfoer*		Date: 09/14/2020
Disclosed and Understood by: *Alex Daichendt*	Date: 09/14/2020	PROPRIETARY INFORMATION

Design Process: Build - Day 23: Hood

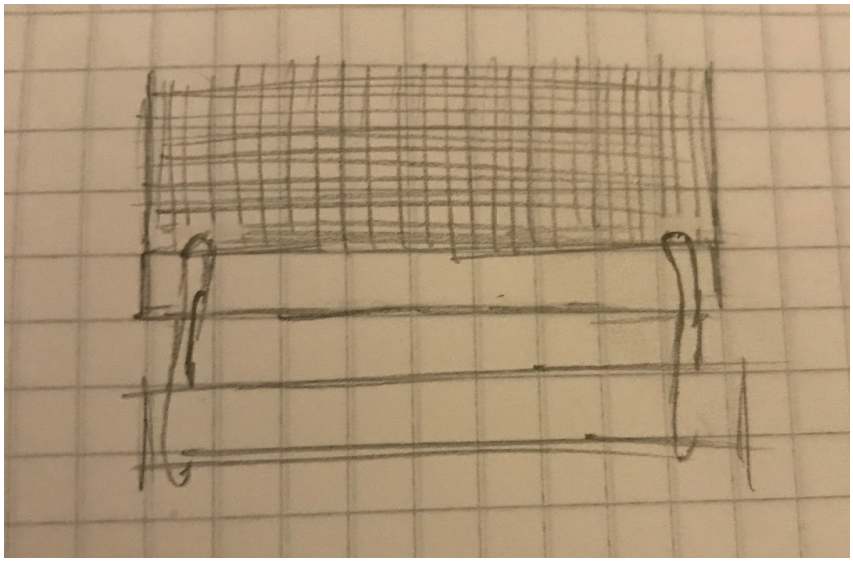

When the hood pops up while driving, the screws cause the mesh of the hood/guide to tear. In order to prevent this, we would like to use a softer material to hold down the mesh.

A slit was cut between two holes of the mesh and a rubber band was looped through this hole. The slits were found on the bottom corners of the mesh, between the mesh and the back c-channel.

Signature: Emma Meihfoer		Date: 09/17/2020
Disclosed and Understood by: Alex Daichendt	Date: 09/17/2020	PROPRIETARY INFORMATION

Design Process: Test - Intake

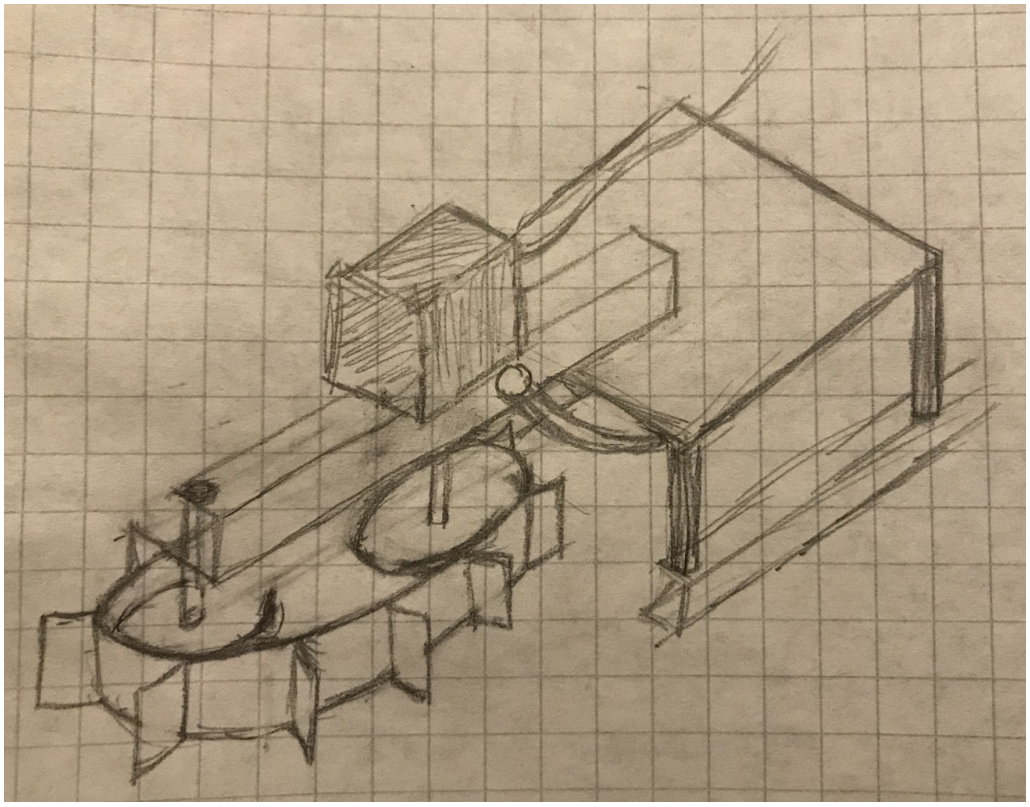

In testing, the central intakes and flywheel all continued to work well, and even the intakes were able to pick up the balls on the field.

Although these intakes could pick up balls, they were unable to descore the balls. These intakes swiveled side to side too much, to the point that they would not push balls out when attempting to descore. Furthermore, these intakes did not meet the 18 inch parameters due to the fact that they were so long.

The robot functioned the same, with the intakes just taking up a larger space, so in regards to that this test was a failure.

Signature: Emma Meihfoer		Date: 09/17/2020
Disclosed and Understood by: Charles Spehl	Date: 09/17/2020	PROPRIETARY INFORMATION

Design Process: Build - Day 24: Hood Release mechanism Disassembly

The current hood release mechanism was working well, but it was not extremely structural, so we started disassembling it to rebuild it better. The current mechanism can be seen in the image below.

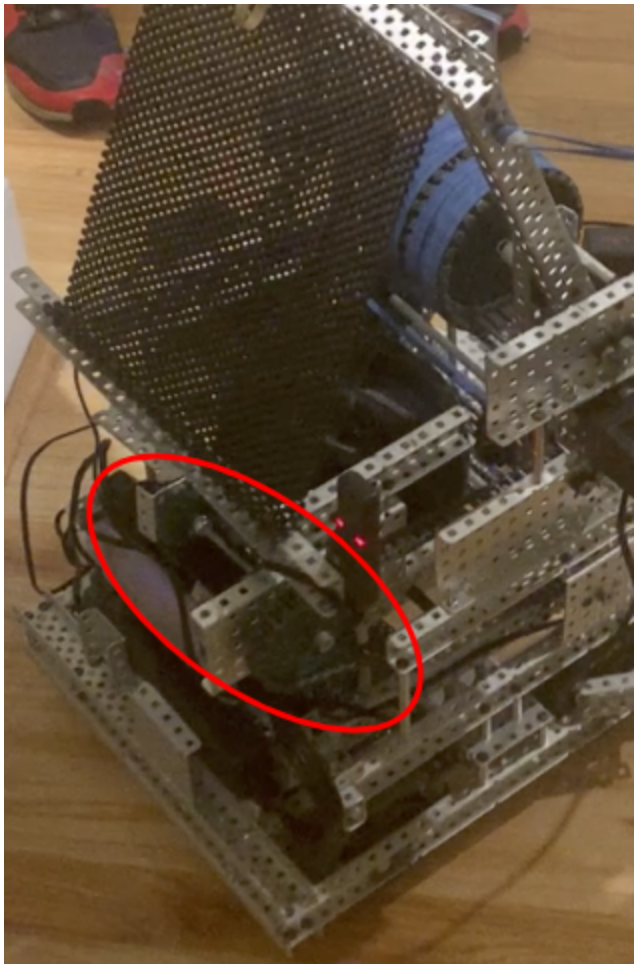

The axle in the current mechanism was not completely straight and it was causing more friction than necessary, and since the sprockets were linked to the central intake, that friction was affecting the central intake.

To fix this problem, we will be reassembling the mechanism to be more balanced across the whole robot.

Signature: Emma Meihfoer		Date: 09/21/2020
Disclosed and Understood by: Alex Daichendt	Date: 09/21/2020	PROPRIETARY INFORMATION

Design Process: Build - Day 25: Hood Release Mechanism Rebuild

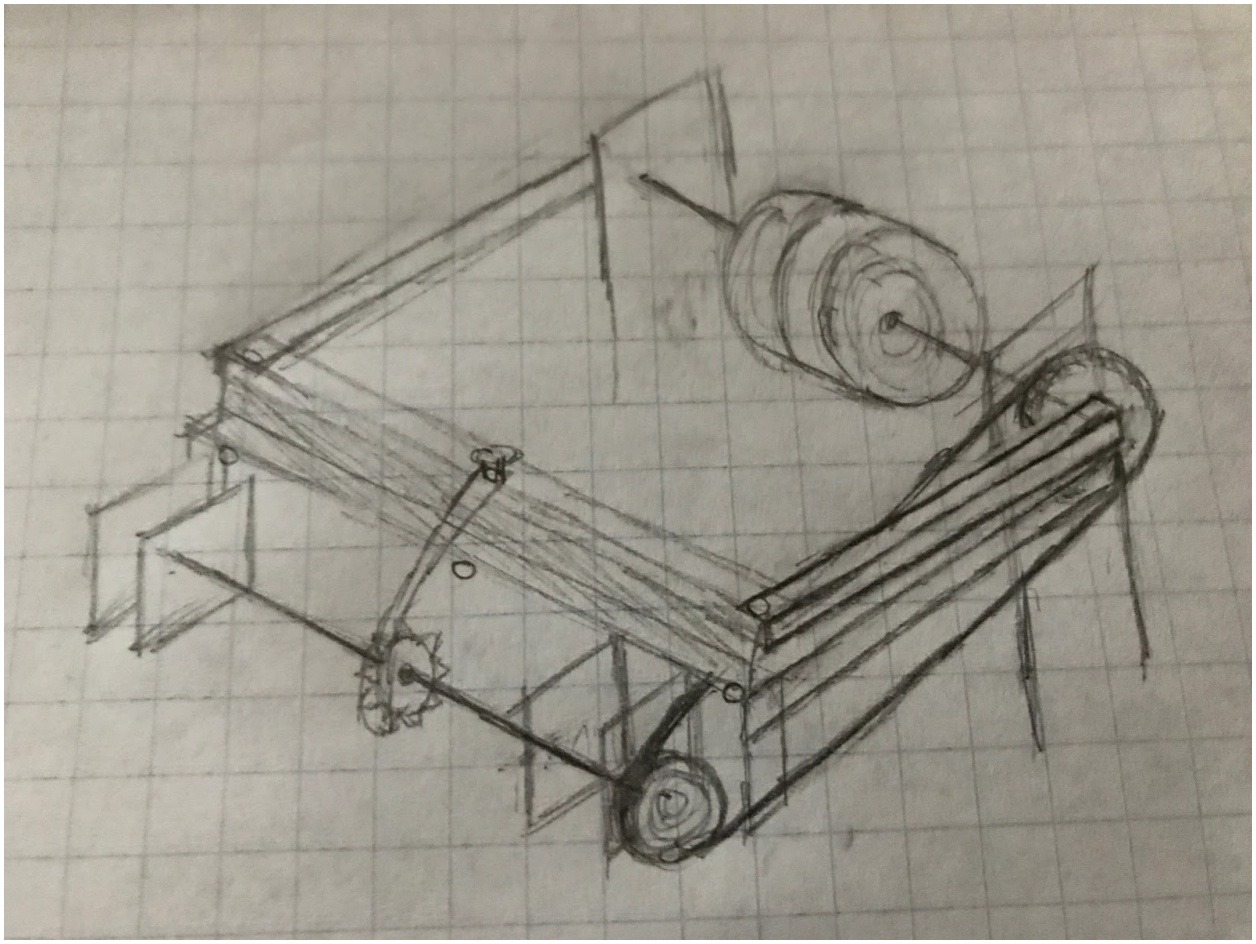

The same design for the hood release was kept, it was just made to be more structural and attached to the chassis of the robot. The hood release was given a longer axle that stretches across the whole back side of the robot. It was ensured that the axle was straight, putting less stress on the sprocket for the central intake than in the previous design.

Some of the spacing that was causing the axle to not be lined up was fixed by using screws with specific spacing with washers to make things line up a bit better.

Signature: Emma Meihfoer		Date: 09/24/2020
Disclosed and Understood by: Alex Daichendt	Date: 09/24/2020	PROPRIETARY INFORMATION

Design Process: Build - Day 26: Hood Release Mechanism Rebuild

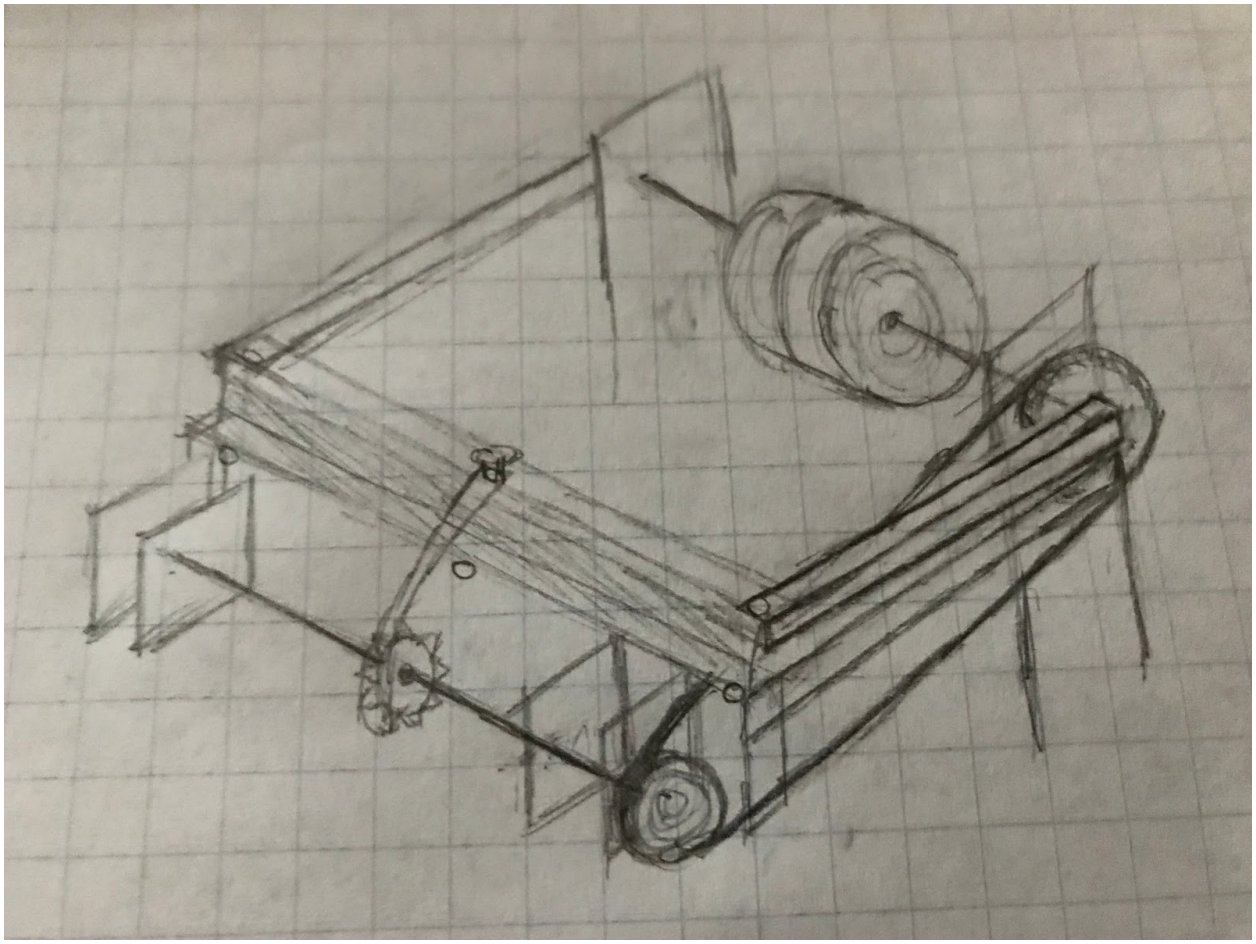

Today was a continuation of the last build day, where the more structural Hood Release was completed. The sprocket connecting the axle to the central intake sprocket was attached to the hood release mechanism.

With all of the improvements to the hood release like making the axle line up correctly and attaching it to the chassis better, it wasn't adding too much friction to the central intake, making it function like normal after the hood was released.

Signature: Emma Meihfoer		Date: 09/28/2020
Disclosed and Understood by: Alex Daichendt	Date: 09/28/2020	PROPRIETARY INFORMATION

October Schedule Breakdown

	October															
	1	2	3	4	5	6	7	8	9	10	11	12	13	14	15	16
Front Intake Redesign																
Front Intake Test																
Descore Mechanism																
Drive Practice / Autonomous																
	17	18	19	20	21	22	23	24	25	26	27	28	29	30	31	
Front Intake Redesign																
Front Intake Test																
Descore Mechanism																
Drive Practice / Autonomous																

The goal is to finish building the robot this month, that way we can focus on creating an autonomous for the skills challenge and on providing our driver the time to train before we participate in a competition in either late November or early December.

Signature: *Emma Meihfoer*		Date: 10/01/2020
Disclosed and Understood by: *Eduardo Cea*	Date: 10/01/2020	PROPRIETARY INFORMATION

Design Process: Build - Day 27: Front Intake

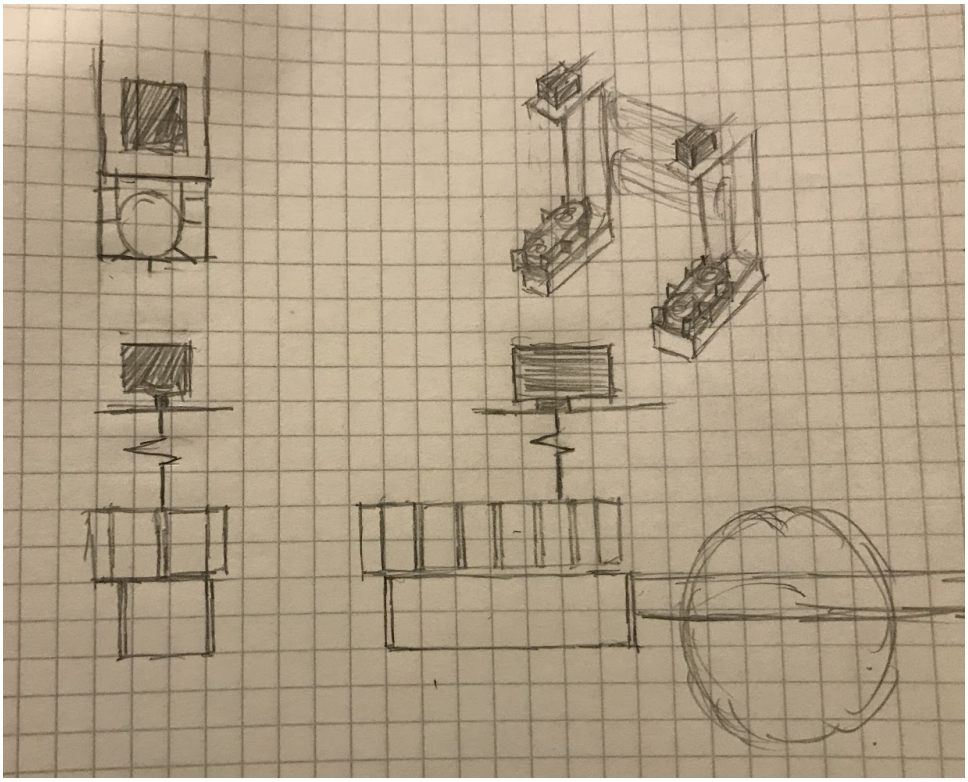

These intakes relocated the motor up top to the chassis area, with an axle running down the front of the robot to a sprocket with treads and flaps attached. This would make for an intake that was rigid and built into the robot, with the idea that it could grab the balls with a lot more friction to hopefully descore the ball.

The last intake design did not have enough grip to grab the balls and descore them from the goal, and so that was the reason behind the intake changes.

In the image above, the design for each of the intakes is shown.

The existing intakes were removed from the robot. A plate to extend the chassis forward was attached to the robot on each side of the chassis.

Signature: Emma Meihfoer		Date: 10/01/2020
Disclosed and Understood by: Alex Daichendt	Date: 10/01/2020	PROPRIETARY INFORMATION

Design Process: Build - Day 28: Front Intake

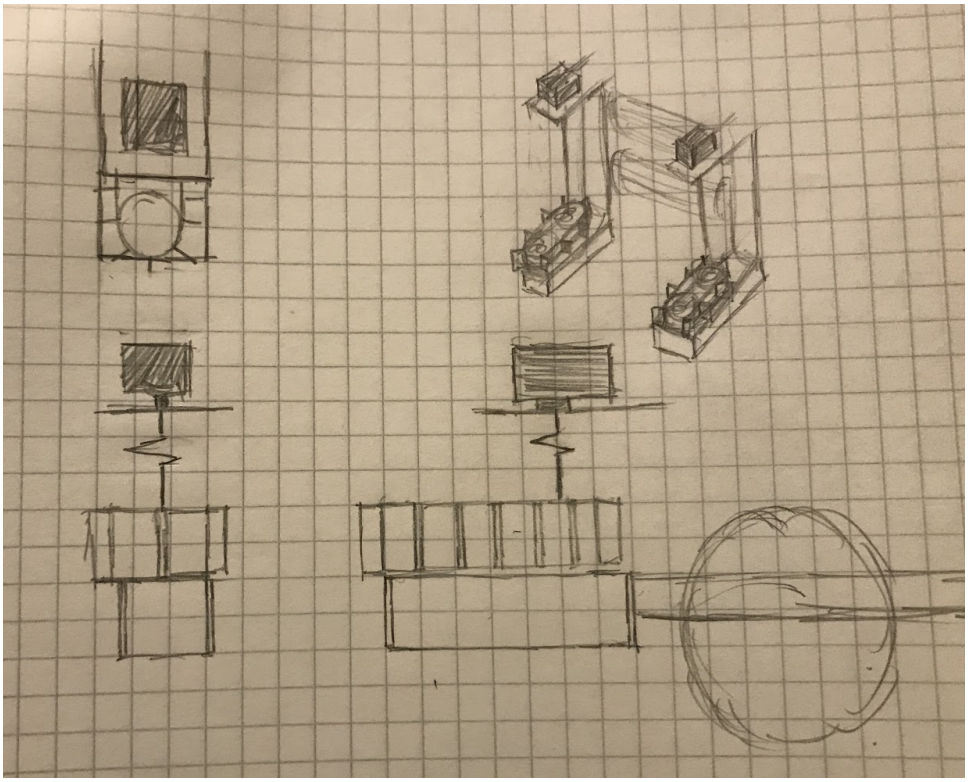

Today, we continued to construct the new intakes. Sprockets were attached to the extended plate on an axle. The axle for the back sprocket was run vertically up the robot to a motor that was placed at the top. By having this motor at the top of the robot, size constraints could be met.

Next, treads with flaps were added to the two sprockets. These two intake devices are spaced at a distance that just fits the ball.

Signature: Emma Meihfoer		Date: 10/05/2020
Disclosed and Understood by: Alex Daichendt	Date: 10/05/2020	PROPRIETARY INFORMATION

Design Process: Build - Day 29: Front Intake

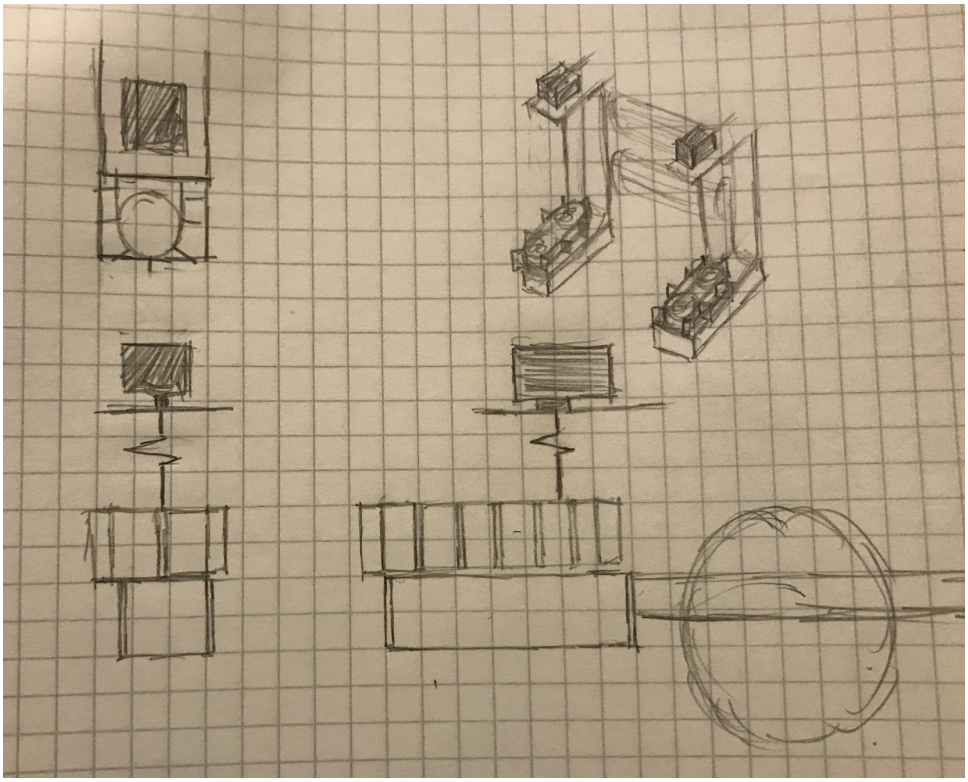

The other intake device, a replica of the one constructed the previous build day was created today.

Sprockets were attached to the other extended plate on an axle. The axle for the back sprocket was run vertically up the robot to a motor that was placed at the top. Next, treads with flaps were added to the two sprockets.

Signature: Emma Meihfoer		Date: 10/08/2020
Disclosed and Understood by: Alex Daichendt	Date: 10/08/2020	PROPRIETARY INFORMATION

Design Process: Test - Robot

The chassis was struggling with the weight of the robot. It is unknown how we will fix this or if we will be able to fix this before our first competition.

The central intakes, flywheel, and hood are working as expected.

The front intakes are struggling to pick up balls, not because the balls bounce away, but because there is not enough space between the front intakes for the balls to be picked up. The distance between the intakes will need to be widened by decreasing the size of the plates the front intakes are on.

This test was an overall failure, because they could not even really be tested, so the front intakes have to be moved apart.

Signature: Emma Meihfoer		Date: 10/15/2020
Disclosed and Understood by: Charles Spehl	Date: 10/15/2020	PROPRIETARY INFORMATION

Design Process: Build - Day 30: Front Intake

The existing design needed to be shifted outwards to allow the ball fit between them.

The intakes were removed from the plates they were upon. These plates were also taken off of the robot.

New plates that were less wide were found and attached to the front of the chassis in the place where the old plates were attached.

Signature: Emma Meihfoer		Date: 10/15/2020
Disclosed and Understood by: Alex Daichendt	Date: 10/15/2020	PROPRIETARY INFORMATION

Design Process: Build - Day 31: Front Intake

The sprockets were reattached to the plate and the motor/axle was reattached to the back sprockets.

The new intake devices have enough space in between each other that they should be able to easily pick up the balls to score.

Signature: Emma Meihfoer		Date: 10/19/2020
Disclosed and Understood by: Alex Daichendt	Date: 10/19/2020	PROPRIETARY INFORMATION

Design Process: Test - Front Intake

During this test of the front intakes, the intakes did work and pick up the balls, but the intakes did not protrude far enough out to grip the balls that were inside of the goal.

We were hoping to be able to descore with this new intake design, since it is more rigid, but we found that the intakes were too short to descore balls in the center of the field.

So we had yet another intake that was no better than the intakes 4 versions ago, but our team has decided to not give up and to try to push the intakes out as far as we can to make it be able to poke the balls out of the middle to descore that one.

Being able to descore the middle would significantly increase our score in the skills competitions, because the skills setup has all three blue balls in it, so it would allow us to complete all the possible rows of three, gaining us 12 points in the game.

Signature: Emma Meihfoer		Date: 10/22/2020
Disclosed and Understood by: Charles Spehl	Date: 10/22/2020	PROPRIETARY INFORMATION

Design Process: Build - Day 31: Front Intake

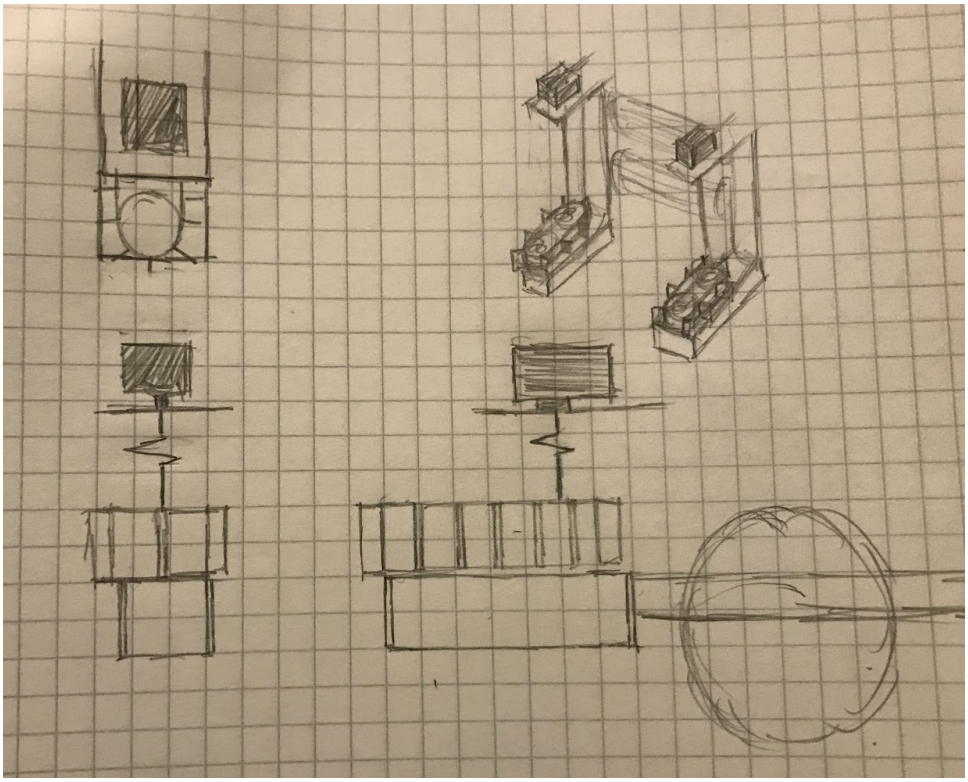

In order to fix the issue of being unable to descore the balls in the middle of the field, we extended the plates on the front of the robot slightly, almost to the 18 inch limit. The measurements are so close there is a larger gap with no flap because even the flap makes the robot too large.

The intakes were removed and a longer plate was attached to the front of the chassis. The sprockets were reattached to the plate and the motor/axle was reattached to the back sprockets.

The hope is that the intake will be large enough to poke out the balls from the center goal, to increase the score.

Signature: Emma Meihfoer		Date: 10/26/2020
Disclosed and Understood by: Alex Daichendt	Date: 10/26/2020	PROPRIETARY INFORMATION

Design Process: Test - Front Intake

With the new construction of the intakes, the robot was able to pick up the balls more easily. The balls were no longer bouncing or rolling away from the robot when we attempted to pick them up. Instead, they were swiftly picked up and pulled in by the central intake.

The chassis appeared to be struggling with the weight of the robot. The robot could only drive for a few minutes before the chassis drive motors became too hot to continue functioning.

On closer inspection, the unbalanced weight of the sides of the robot may be causing further issues to the drive of the chassis. This could be fixed with the use of four motor drives, but we do not have four motors available at the moment.

We were able to score the balls in the goals found in the corner of the field, but we struggled to do so in the center. This is most likely an issue that will be solved with driving practice.

In today's testing the intakes were still able to function and pick up the balls just as well as they had been doing before, but it was actually able to descore on occasion, but it was extremely inconsistent and pretty hard to do.

Signature: Emma Meihfoer		Date: 10/29/2020
Disclosed and Understood by: Charles Spehl	Date: 10/29/2020	PROPRIETARY INFORMATION

November Schedule Breakdown

	November														
	1	2	3	4	5	6	7	8	9	10	11	12	13	14	15
Front Intake Redesign															
Front Intake Test															
Descore Mechanism															
Descore Mechanism Test															
Descore Mechanism Redesign															
Drive Practice / Autonomous															
	16	17	18	19	20	21	22	23	24	25	26	27	28	29	30
Front Intake Redesign															
Front Intake Test															
Descore Mechanism															
Descore Mechanism Test															
Descore Mechanism Redesign															
Drive Practice / Autonomous															

Since we are now registered to compete on December 5th in a skills challenge, we will begin meeting Mondays, Tuesdays, and Thursdays. We are requesting an opportunity to meet on Wednesdays after school to develop autonomous code, but it is undetermined if this will occur. Due to Thanksgiving Break, we will be unable to meet from the 25th to the 29th.

Signature: *Emma Meihfoer*		Date: 11/01/2020
Disclosed and Understood by: *Eduardo Cea*	Date: 11/01/2020	PROPRIETARY INFORMATION

Design Process: Build - Day 32: Descore mechanism

Since the intakes are unable to effectively descore the balls in the middle goal without getting stuck, we need to make a new descore mechanism.

An idea for a new descore mechanism is to have a bar on the back of the robot that will be used to push out the balls from the middle goal.

In order to make this bar, it must drop down due to the size constraints of the robot.

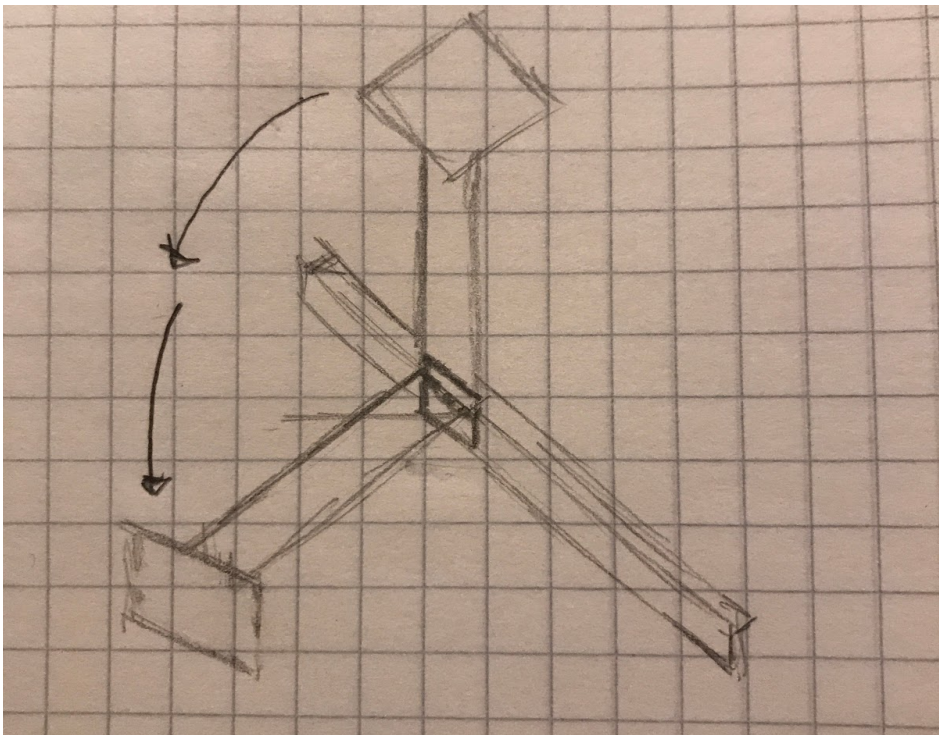

The bar will drop down when the robot moves forward and a small wheel will be attached to the end of the descoring mechanism, to allow it to move around with the robot.

Signature: Emma Meihfoer		Date: 11/02/2020
Disclosed and Understood by: Alex Daichendt	Date: 11/02/2020	PROPRIETARY INFORMATION

Design Process: Test - Descore Mechanism

The descoring mechanism was able to push out the balls from the middle goal about half of the time, but the wheel kept getting caught on the goal. As a result, it caused the robot to get stuck.

The descoring mechanism made it harder for the robot to turn. It also made it more challenging for the driver.

The wheel also dragged a lot, creating more resistance and pressure on the chassis motors. This caused the motors to heat up even faster than they usually do. The robot is heavy, so the 2 drive motors will end up overheating with that extra turning resistance put on it.

There were a few times when we were able to push all three of the blue balls out of the middle goal, but majority of the time, we were only able to push out two balls.

Signature: Emma Meihfoer		Date: 11/05/2020
Disclosed and Understood by: Charles Spehl	Date: 11/05/2020	PROPRIETARY INFORMATION

Motor Port Layout

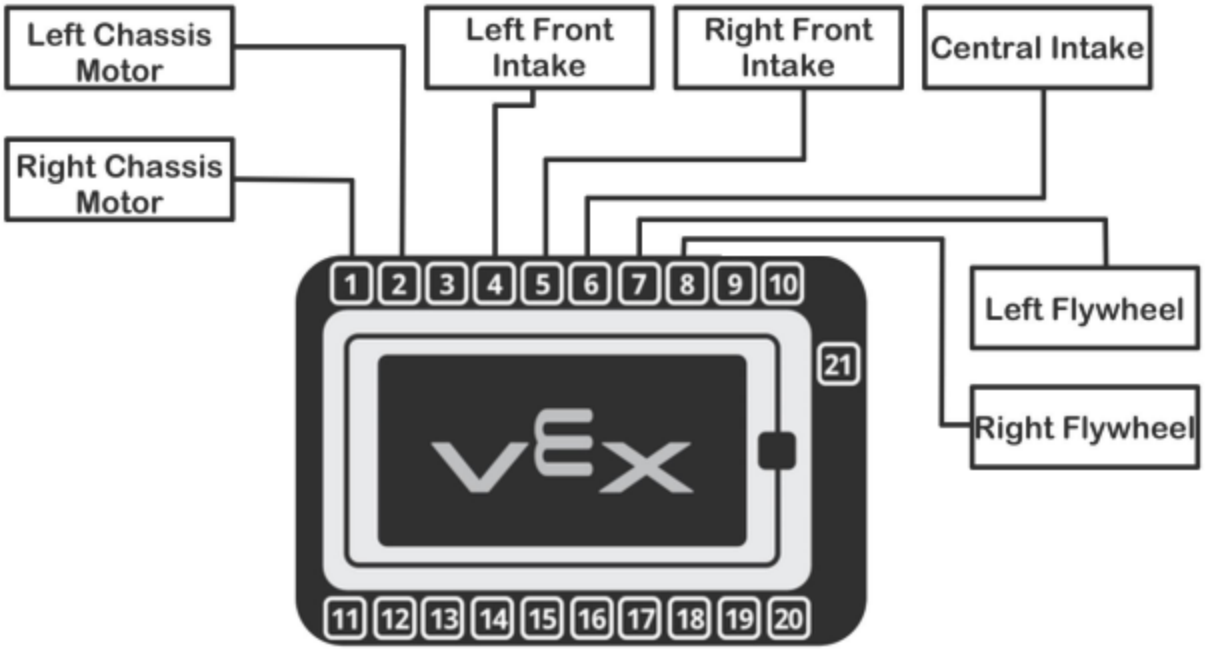

The image above displays which ports on the VEX V5 Robot Brain correspond to which motors on the robot.

The function of each of the motors are labeled. This includes, the chassis drive, the front intakes, the central intake,and the flywheel.

Signature: Emma Meihfoer		Date: 11/05/2020
Disclosed and Understood by: Charles Spehl	Date: 11/05/2020	PROPRIETARY INFORMATION

Design Process: Build - Day 33: Descore Mechanism

Because the dragging from the wheel caused a lot of resistance when turning, we decided to make the descore bar hit a stopper when it fell so it would just be a rod poking out the back without touching the ground as seen in the image below.

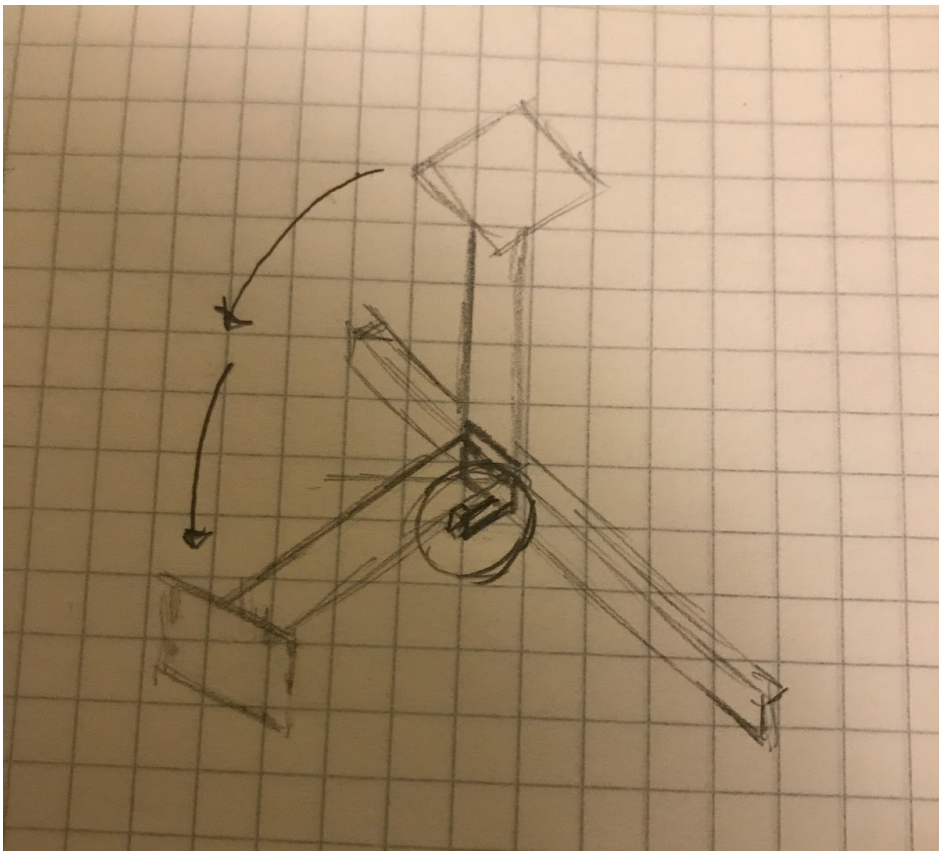

A weight would be attached on the back of the bar to make sure it wouldn't just fly back up if it hit something.

This would eliminate the resistance when turning and should be able to descore with the same amount of success

Signature: Emma Meihfoer		Date: 11/09/2020
Disclosed and Understood by: Alex Daichendt	Date: 11/09/2020	PROPRIETARY INFORMATION

Design Process: Test - Descore Mechanism

The floating bar was able to descore the blue balls in the middle goal more effectively than the descore mechanism with a wheel. It hooked on the goal fewer times than with the other descoring mechanism.

The new descoring mechanism did not cause any resistance towards the chassis motors, unlike the first descoring mechanism, allowing the robot to move for a longer period of time before the chassis drive motors heated up.

More driving practice will be needed to properly learn to descore blue balls from the middle goal in a quick manner.

Overall, this test was successful and we were able to now descore.

Signature: Emma Meihfoer		Date: 11/12/2020
Disclosed and Understood by: Charles Spehl	Date: 11/12/2020	PROPRIETARY INFORMATION

Drive Plan

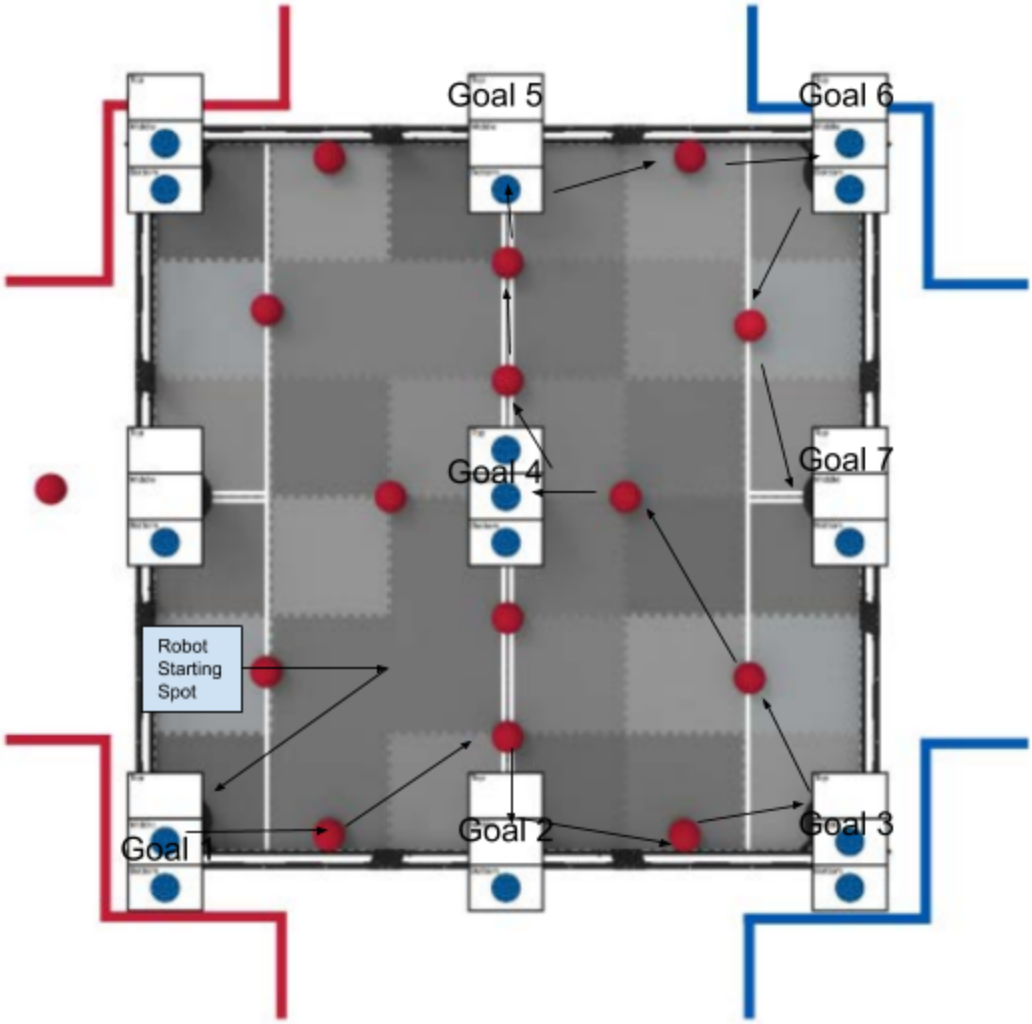

Starting from the alliance, corner, the robot will be driven forward and turned to pick up a ball. Added to the pre-load, this will mean the robot will be carrying two balls. The robot will score in goal 1. Next, the robot will turn and pick up two more balls. These balls will be deposited in goal 2. Then, the robot will pick up another ball and place it in goal 3. Thengfchvxc placement of this ball will create a row of three, for higher points. At this point, the robot will still have one ball in its possession. The robot will turn and pick up two more balls on its way to goal 4. It will then descore all three blue balls from goal 4 and score three red balls. Next, the robot will turn and pick up two balls on its way to goal 5. It will score these two balls. At this point, it is unknown if there will be enough time left to continue, but if there is time, the plan is to turn towards goal 6, pick up a ball, and score. Then, the robot will turn towards goal 7, pick up another ball and score to get three rows of three.

Signature: *Emma Meihfoer*		Date: 11/16/2020
Disclosed and Understood by: *Alex Daichendt*	Date: 11/16/2020	PROPRIETARY INFORMATION

Design Process: Drive Practice - Day 1

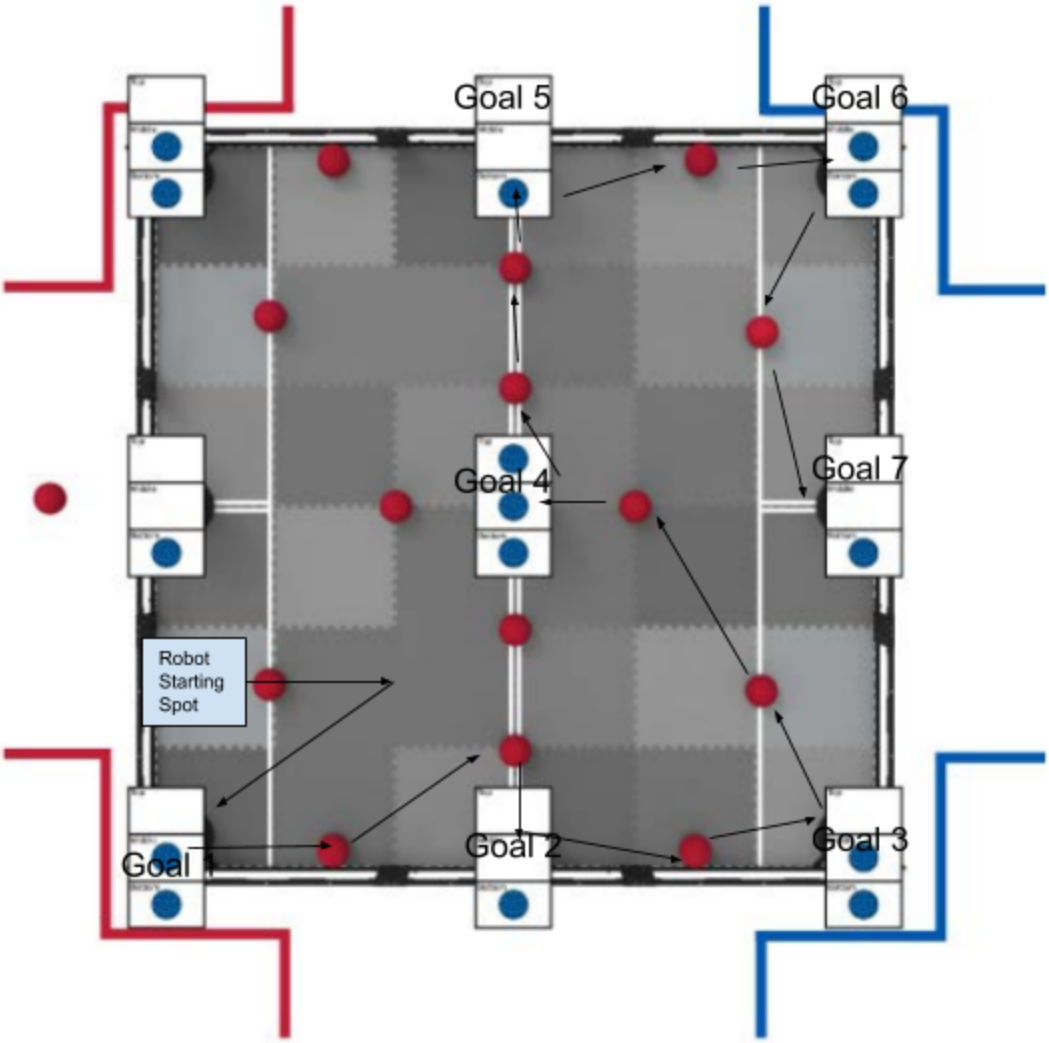

The image above shows the drive plan. We were able to score goals one and two, and at one point goal three, but we have not been able to score goal 4. We get stuck at the point of descoring the blue balls in goal 4. The descore mechanism is working, but we believe more practice is needed to effectively use it.

Signature: *Emma Meihfoer*		Date: 11/16/2020
Disclosed and Understood by: *Alex Daichendt*	Date: 11/16/2020	PROPRIETARY INFORMATION

Design Process: Program - Day 4: Autonomous

Below are the autonomous methods. These are the methods that are used to make programming the autonomous faster.

```
void driveForward(float rotations, float speed) {
  RM.spinFor(directionType::rev, rotations, rotationUnits::rev,speed, velocityUnits::pct, false);
  LM.spinFor(directionType::rev, rotations, rotationUnits::rev,speed, velocityUnits::pct, false);
}

void driveBackward(float rotations, float speed) {
  RM.spinFor(directionType::fwd, rotations, rotationUnits::rev,speed, velocityUnits::pct, false);
  LM.spinFor(directionType::fwd, rotations, rotationUnits::rev,speed, velocityUnits::pct, false);
}

void turnRight(float ominousunits, float speed) {
  RM.spinFor(directionType::fwd, ominousunits, rotationUnits::rev,speed, velocityUnits::pct, false);
  LM.spinFor(directionType::rev, ominousunits, rotationUnits::rev,speed, velocityUnits::pct, false);
}

void turnLeft(float ominousunits, float speed) {
  LM.spinFor(directionType::fwd, ominousunits, rotationUnits::rev,speed, velocityUnits::pct, false);
  RM.spinFor(directionType::rev, ominousunits, rotationUnits::rev,speed, velocityUnits::pct, false);
}

void score(float speed, float spinUpTime) {
  mainspin.spinFor(directionType::rev, 0.25, rotationUnits::rev,50, velocityUnits::pct, true);
  flywheelL.spin(directionType::fwd, speed, velocityUnits::pct);
  flywheelR.spin(directionType::fwd, speed, velocityUnits::pct);
  task::sleep(5000);
  mainspin.spin(directionType::fwd, 100, velocityUnits::pct);
  task::sleep(400);
  flywheelL.spin(directionType::fwd, 0, velocityUnits::pct);
  flywheelR.spin(directionType::fwd, 0, velocityUnits::pct);
  mainspin.spin(directionType::fwd, 0, velocityUnits::pct);
}
```

```
void intakeAll(float speed) {
  intakeL.spin(directionType::fwd, speed, velocityUnits::pct);
  intakeR.spin(directionType::fwd, speed, velocityUnits::pct);
  mainspin.spin(directionType::fwd, speed, velocityUnits::pct);
}

void externalIntake(float speed) {
  intakeL.spin(directionType::fwd, speed, velocityUnits::pct);
  intakeR.spin(directionType::fwd, speed, velocityUnits::pct);
}

void internalIntake(float speed) {
  mainspin.spin(directionType::fwd, speed, velocityUnits::pct);
}
```

These methods just help with making the autonomous quicker and easier to read

```
void autonomous(void) {

  intakeAll(100);
  driveForward(2, 60);
  task::sleep(2000);
  intakeAll(0);
  turnRight(0.87, 100);
  task::sleep(800);
  driveForward(1.9, 40);

  score(45, 750);
```

The Autonomous was programmed to score it's first point, and the code can be seen above. It starts by running the intakes and then driving forward to pick up it's first ball, then it turns right and drives forward to the goal and scores

Signature: *Charles Spehl*		Date: 11/16/2020
Disclosed and Understood by: *Emma Meihfoer*	Date: 11/16/2020	PROPRIETARY INFORMATION

Design Process: Program - Day 5: Autonomous

```
void autonomous(void) {

  intakeAll(100);
  driveForward(2, 60);
  task::sleep(2000);
  intakeAll(0);
  turnRight(0.87, 100);
  task::sleep(800);
  driveForward(1.9, 40);

  score(45, 750);
  ////////////////////////////

  driveBackward(1.9, 70);
  turnLeft(0.4, 100);
  intakeAll(100);
  driveForward(1, 70);
  intakeAll(0);
```

The autonomous was extended to start to try to score it's second point, but it was not finished in time. The code makes use of the autonomous methods to make it much simpler to read and type.

Signature: Charles Spehl		Date: 11/17/2020
Disclosed and Understood by: Emma Meihfaer	Date: 11/17/2020	PROPRIETARY INFORMATION

Design Process: Drive Practice - Day 2

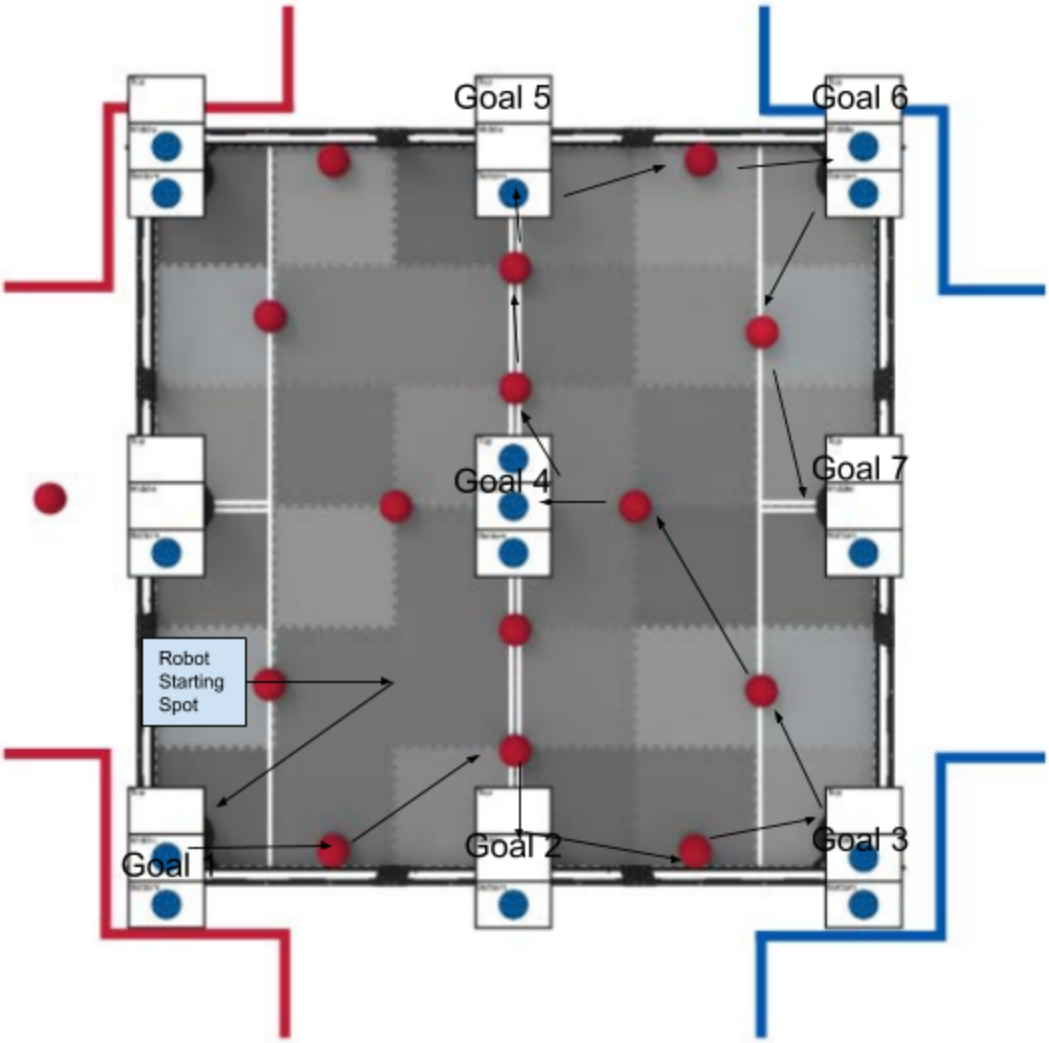

The image above is of the drive plan. There was one point where we were able to score all of the goals, up until goal 6. Unfortunately, we have been consistent at goals one and two, but at goal three, we tend to slip and make mistakes. This may be due to the fact that goal three is further away from the red team alliance drive center.

The motors were heating up and preventing the robot from moving every other run through. This eliminates our ability to practice more due to the fact that we need to stop and wait for the motors to cool down.

Signature: *Emma Meihfoer*		Date: 11/19/2020
Disclosed and Understood by: *Alex Daichendt*	Date: 11/19/2020	PROPRIETARY INFORMATION

Design Process: Drive Practice - Day 3

While driving the robot, we noticed that sometimes when we stopped to shoot the ball, a clicking noise could be heard. We found out this was because the intakes were stopping with the flap hitting the driving wheel. As a result, the flaps were making a clicking noise against the wheels. We do not believe this is a concerning matter because it does not affect the robot's function.

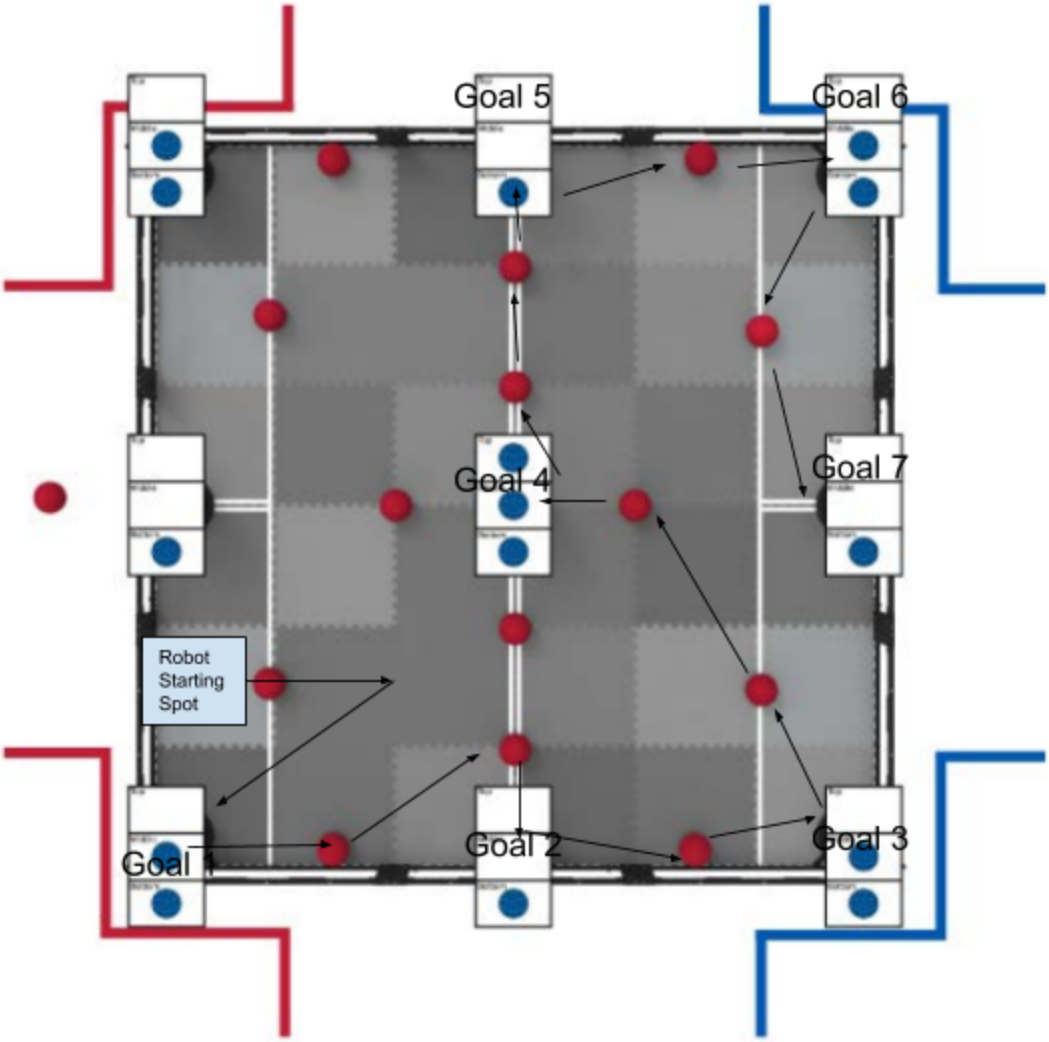

In the image above, the drive plan is shown. The driver has been able to consistently score in goal 1, goal 2, and goal 3. A few of the times, goal 4 has been scored and one time we made it to goal 5, but we have not been able to go further than that. We noticed that the descore mechanism kept getting caught in goal 4 instead of descoring the balls due to how hooked it is. As a result, we plan to remove the hooked part and leave it as a flat plate.

Signature: Emma Meihfoer		Date: 11/23/2020
Disclosed and Understood by: Alex Daichendt	Date: 11/23/2020	PROPRIETARY INFORMATION

Design Process: Build - Day 34: Descore Mechanism

The back end of the descoring mechanism/bar was repeatedly catching on the middle goal, leading to our robot becoming stuck.

In order to fix this issue, the gear box hook that was being used on the back of the bar was replaced with a flat plate. This plate will be used to push the balls out and without the small area in the gearbox, it will be easier to unhook the robot from the goal than in the previous design.

By eliminating this issue, the driver will be able to continue using the robot, even if it happens to become stuck on the middle goal for a moment.

Signature: Emma Meihfoer		Date: 11/24/2020
Disclosed and Understood by: Alex Daichendt	Date: 11/24/2020	PROPRIETARY INFORMATION