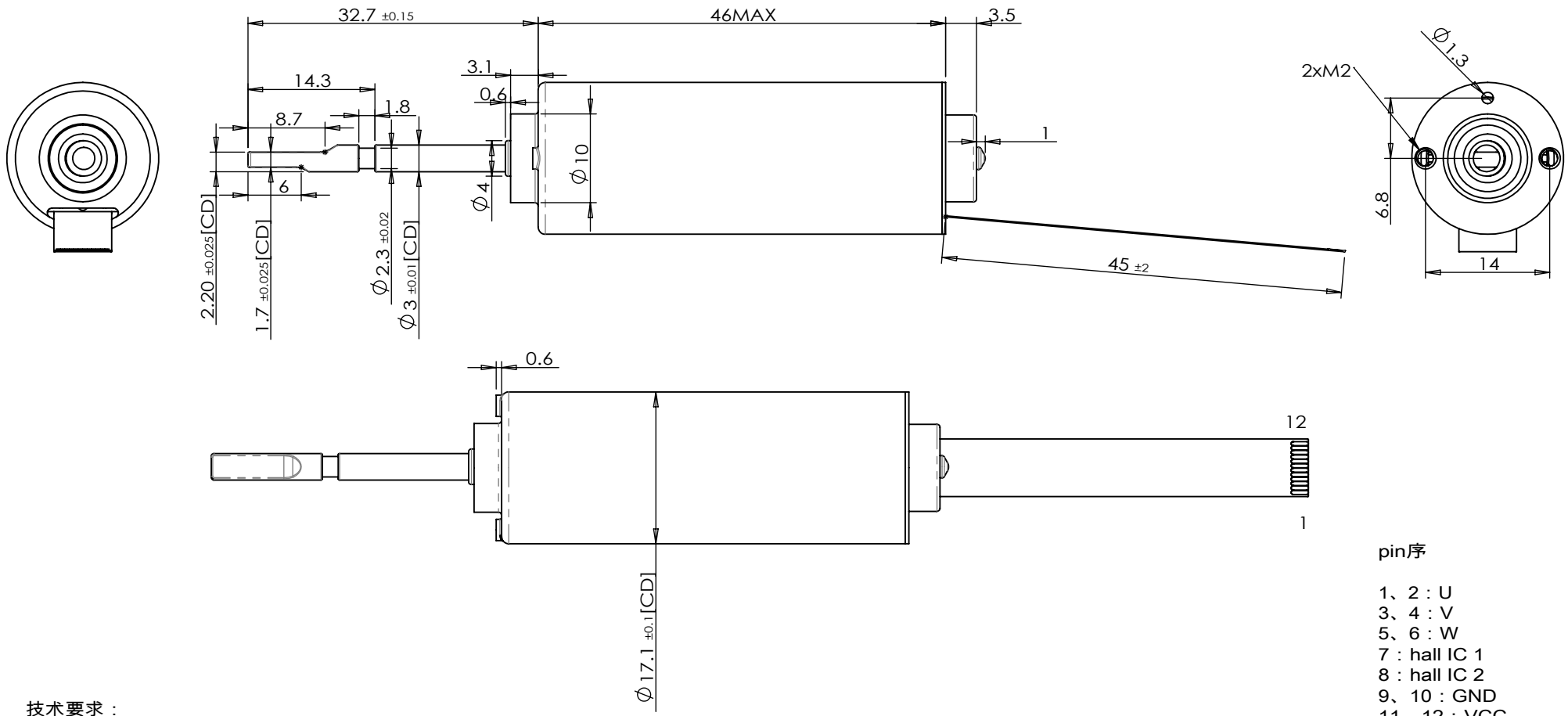


pin序

1、2：U
3、4：V
5、6：W
7：hall IC 1
8：hall IC 2
9、10：GND
11、12：VCC

技术要求：
1.额定电压7.4V，额定频率200-500Hz，额定功率3-6W；
2.外观良好无变形；
3.[CD]标记为重要尺寸；
4.与环境相关的材料使用基准要符合欧盟RoHS、REACH及中国电器电子产品有害物质限制使用管理办法的规定.

| REV. | REF. | DESCRIPTION | DATE | BY |
|---|---|---|---|---|
| | | 初次发放 | 221129 | 张 |

东莞市驰驱电机有限公司
DONGGUAN CHI DRIVE MOTORS CO,.LTD

| | | |
|---|---|---|
| DWN. BY | CHK. BY | APP. BY |
| Date (yyyymmdd) 2022/11/15 | Date (yyyymmdd) | Date (yyyymmdd) |
| MATERIAL : | | A4 |
| FINISH : | COMPLY WITH DIRECTIVE 2011/65/EU(RoHS). | |
| General Tolerance ISO 2768-1 Class m (Unless specified) | UNIT: mm | SCALE 3:2 |

| | | | | | | | | | |
|---|---|---|---|---|---|---|---|---|---|
| Linear Dimensions | 0.5~3 | >3~6 | >6~30 | >30~120 | >120~400 | >400~1000 | >1000~2000 | >2000~4000 |
| | ±0.1 | ±0.1 | ±0.2 | ±0.3 | ±0.5 | ±0.8 | ±1.2 | ±2 |
| Fillet & Chamfer Dimensions | 0.5~3 | >3~6 | >6~30 | >30 | | | | |
| | ±0.2 | ±0.5 | ±1 | ±2 | | | | |
| Angular Dimensions | Permissible deviations for ranges of lengths of shorter side of the angle concerned | | | | | | | |
| | ~10 | >10~50 | >50~120 | >120~400 | >400 | | | |
| | ±1° | ±30' | ±20' | ±10' | ±5' | | | |

TITLE
伺服电机

SPEC.
Ø × Ø ×H

DWG No.

SHEET 1 OF 1