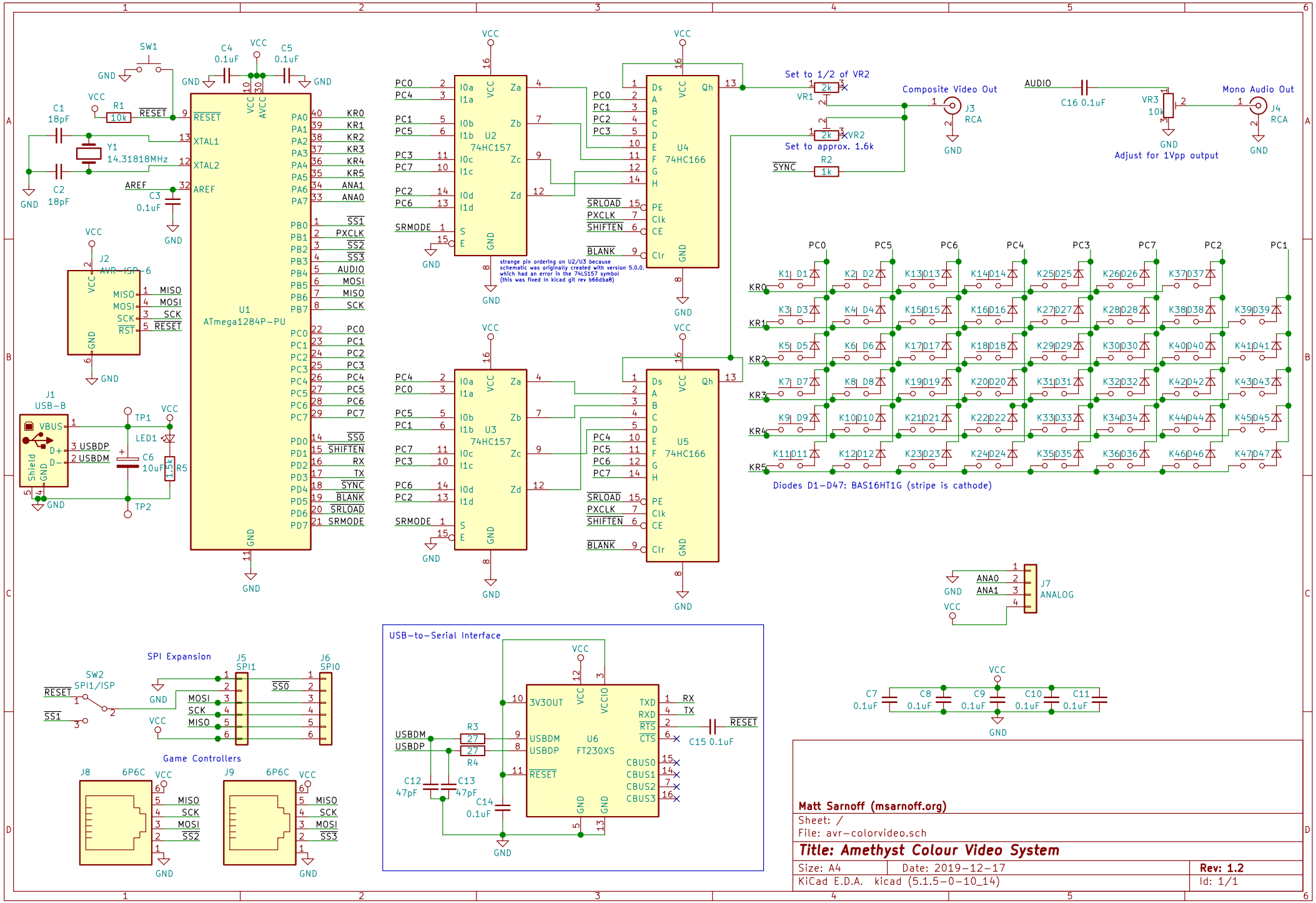

Matt Sarnoff (msarnoff.org)

Sheet: /

File: avr-colorvideo.sch

Title: Amethyst Colour Video System

Size: A4	Date: 2019-12-17	Rev: 1.2
KiCad E.D.A. kicad (5.1.5-0-10_14)		Id: 1/1