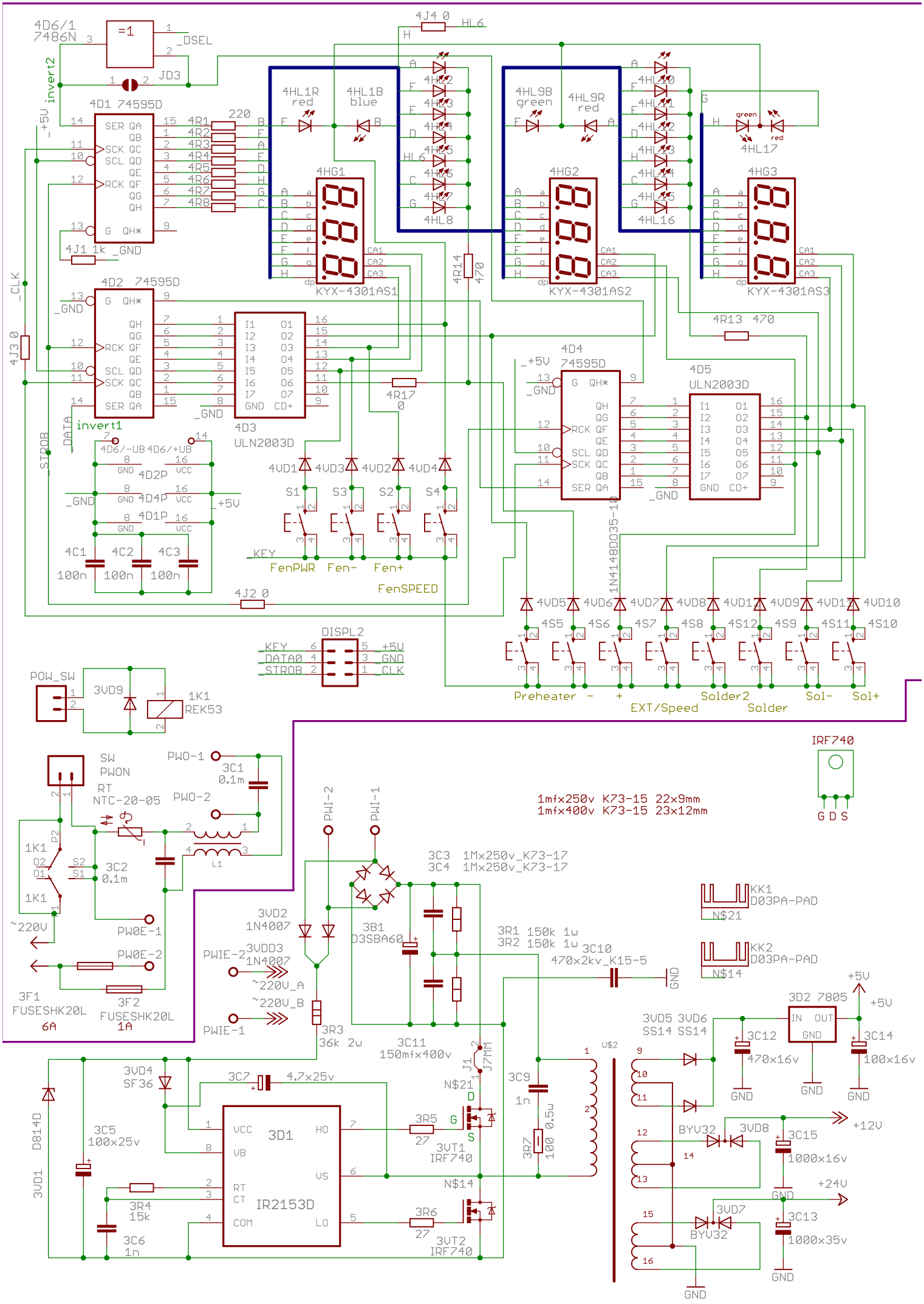
4D6/1
7486N
=1
_DSEL
JD3
invert2
_+5V
4D1 74595D
SER QA
QB
SCK QC
SCL QD
QE
RCK QF
QG
QH
G QH*
4J1 1k _GND
4R1
4R2
4R3
4R4
4R5
4R6
4R7
4R8
220
4HL1R
red
4HL1B
blue
4HL9B
green
4HL9R
red
4HL17
4HG1
4HG2
4HG3
KYX-4301AS1
KYX-4301AS2
KYX-4301AS3
4R14
470
4R13 470
4J4 0
HL6
4HL8
4HL16
_CLK
4J3 0
4D2 74595D
_GND
4D3
ULN2003D
4R17
0
4D4
74595D
_+5V
4D5
ULN2003D
invert1
_DATA
_STROB
4D6/-UB
4D6/+UB
4D2P
4D4P
4D1P
GND
VCC
_+5V
4C1
4C2
4C3
100n
4VD1
4VD3
4VD2
4VD4
S1
S3
S2
S4
_KEY
FenPWR
Fen-
Fen+
FenSPEED
4J2 0
1N4148D035-10
4VD5
4VD6
4VD7
4VD8
4VD1
4VD9
4VD1
4VD10
4S5
4S6
4S7
4S8
4S12
4S9
4S11
4S10
Preheater
-
+
EXT/Speed
Solder2
Solder
Sol-
Sol+
DISPL2
_KEY
_DATA0
_STROB
_+5V
_GND
_CLK
POW_SW
3VD9
1K1
REK53
SW
PWON
RT
NTC-20-05
PWO-1
PWO-2
3C1
0.1m
3C2
0.1m
L1
1K1
~220V
PW0E-1
PW0E-2
3F1
FUSESHK20L
6A
3F2
FUSESHK20L
1A
PWI-2
PWI-1
3VD2
1N4007
3VDD3
1N4007
PWIE-2
PWIE-1
~220V_A
~220V_B
3R3
36k 2w
3B1
D3SBA60
3C3 1Mx250v_K73-17
3C4 1Mx250v_K73-17
1mfx250v K73-15 22x9mm
1mfx400v K73-15 23x12mm
IRF740
G D S
3R1 150k 1w
3R2 150k 1w
3C10
470x2kv_K15-5
GND
KK1
D03PA-PAD
N$21
KK2
D03PA-PAD
N$14
3C11
150mfx400v
J1
J7MM
N$21
N$14
3VD4
SF36
3C7
4.7x25v
D814D
3VD1
3C5
100x25v
3D1
IR2153D
VCC
VB
RT
CT
COM
HO
VS
LO
3R4
15k
3C6
1n
3R5
27
3VT1
IRF740
3R6
27
3VT2
IRF740
3C9
1n
3R7
100 0.5w
U$2
3VD5 3VD6
SS14 SS14
3D2 7805
IN OUT
GND
+5V
3C12
470x16v
3C14
100x16v
BYV32
3VD8
3C15
1000x16v
+12V
+24V
3VD7
BYV32
3C13
1000x35v

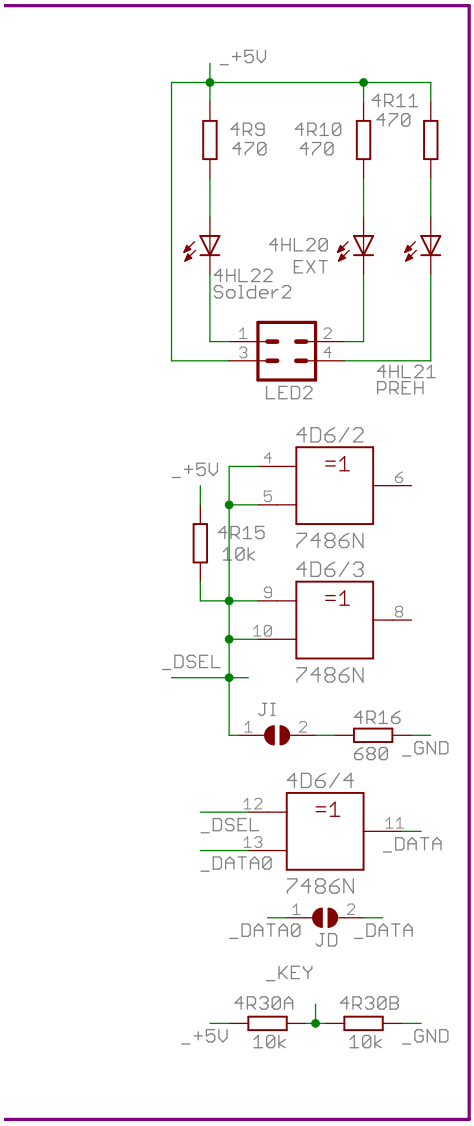
_+5V
4R9 470
4R10 470
4R11 470
4HL22 Solder2
4HL20 EXT
4HL21 PREH
LED2
4D6/2
=1
7486N
4R15 10k
4D6/3
=1
7486N
_DSEL
JI
4R16 680
_GND
4D6/4
=1
7486N
_DSEL
_DATA0
_DATA
JD
_KEY
4R30A 10k
4R30B 10k

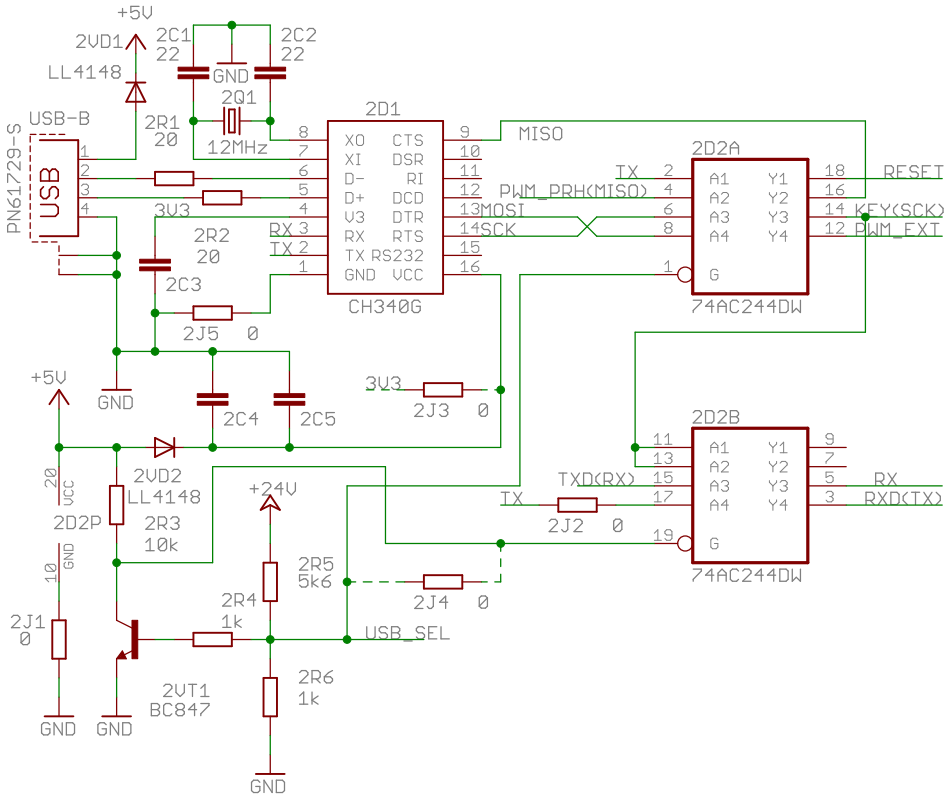
+5V
2VD1 LL4148
2C1 22
2C2 22
GND
2Q1 12MHz
2R1 20
USB-B
PN61729-S
USB
3V3
2R2 20
2C3
2J5 0
2D1
CH340G
XO CTS
XI DSR
D- RI
D+ DCD
V3 DTR
RX RTS
TX RS232
GND VCC
MISO
PWM_PRH(MISO)
MOSI
SCK
TX
RX
2D2A
74AC244DW
RESET
KEY(SCK)
PWM_EXT
2D2B
74AC244DW
TXD(RX)
RXD(TX)
2J2 0
2J3 0
2J4 0
2C4
2C5
2VD2 LL4148
2D2P
2R3 10k
+24V
2R5 5k6
2R4 1k
2R6 1k
2J1 0
2VT1 BC847
USB_SEL

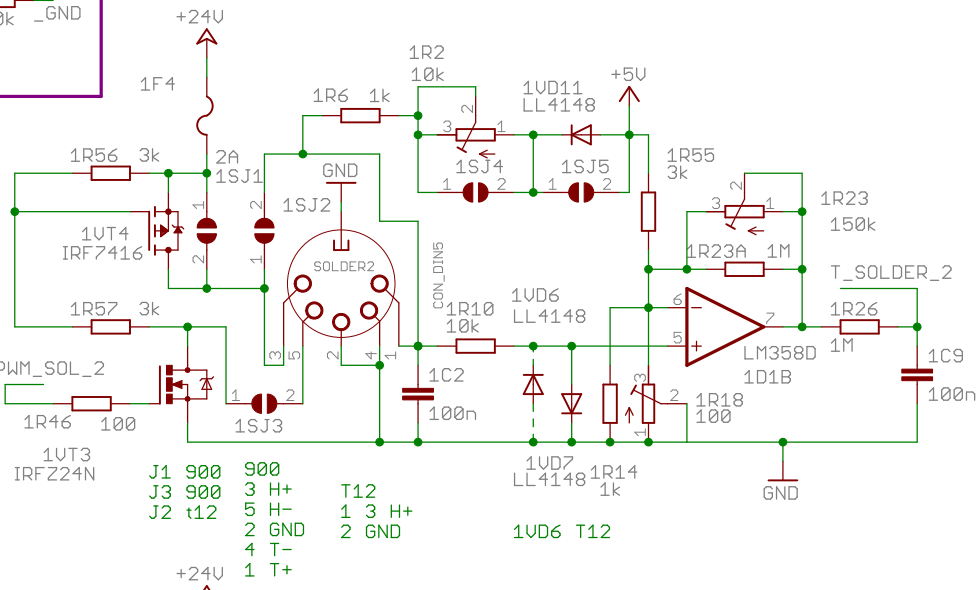
+24V
1F4
1R6 1k
1R2 10k
1VD11 LL4148
+5V
1R56 3k
2A 1SJ1
GND
1SJ2
1SJ4
1SJ5
1R55 3k
1R23 150k
1VT4 IRF7416
SOLDER2
CON_DIN5
1R23A 1M
T_SOLDER_2
1R57 3k
1R10 10k
1VD6 LL4148
1R26 1M
LM358D 1D1B
1C9 100n
PWM_SOL_2
1R46 100
1SJ3
1C2 100n
1R18 100
1VT3 IRFZ24N
1VD7 LL4148
1R14 1k
GND
J1 900 900
J3 900 3 H+
J2 t12 5 H-
2 GND
4 T-
1 T+
T12
1 3 H+
2 GND
1VD6 T12

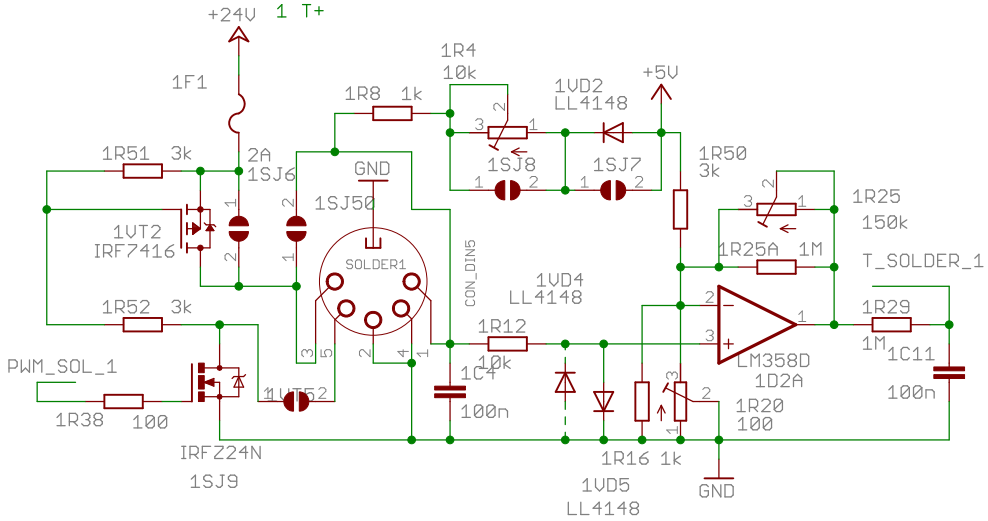
+24V
1F1
1R8 1k
1R4 10k
1VD2 LL4148
+5V
1R51 3k
2A 1SJ6
GND
1SJ50
1SJ8
1SJ7
1R50 3k
1R25 150k
1VT2 IRF7416
SOLDER1
CON_DIN5
1R25A 1M
T_SOLDER_1
1R52 3k
1VD4 LL4148
1R12 10k
1R29 1M
LM358D 1D2A
1C11 100n
PWM_SOL_1
1R38 100
1VT52
1C4 100n
1R20 100
IRFZ24N
1SJ9
1R16 1k
1VD5 LL4148
GND

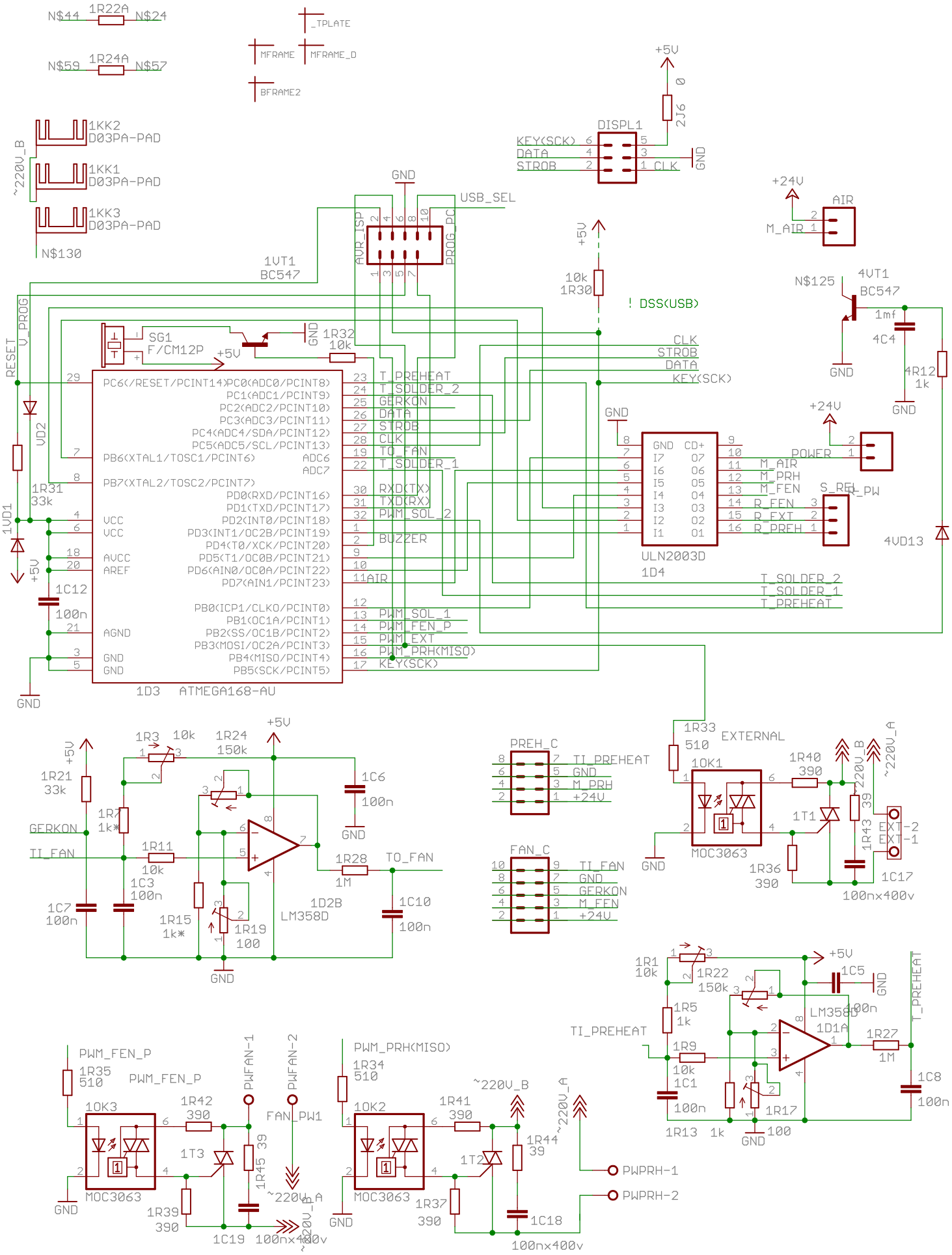
N$44 1R22A N$24
N$59 1R24A N$57
_TPLATE
MFRAME
MFRAME_D
BFRAME2
1KK2 D03PA-PAD
1KK1 D03PA-PAD
1KK3 D03PA-PAD
N$130
~220V_B
+5V
2J6 0
DISPL1
KEY(SCK) 6
DATA 4
STROB 2
5
3
1 CLK
GND
USB_SEL
AVR_ISP
PROG_PC
1VT1 BC547
10k 1R30
! DSS(USB)
+24V
AIR
M_AIR 1
N$125
4VT1 BC547
1mf 4C4
4R12 1k
SG1 F/CM12P
1R32 10k
RESET
V_PROG
VD2
1R31 33k
1VD1
1C12 100n
PC6(/RESET/PCINT14)
PC0(ADC0/PCINT8)
PC1(ADC1/PCINT9)
PC2(ADC2/PCINT10)
PC3(ADC3/PCINT11)
PC4(ADC4/SDA/PCINT12)
PC5(ADC5/SCL/PCINT13)
PB6(XTAL1/TOSC1/PCINT6)
PB7(XTAL2/TOSC2/PCINT7)
PD0(RXD/PCINT16)
PD1(TXD/PCINT17)
PD2(INT0/PCINT18)
PD3(INT1/OC2B/PCINT19)
PD4(T0/XCK/PCINT20)
PD5(T1/OC0B/PCINT21)
PD6(AIN0/OC0A/PCINT22)
PD7(AIN1/PCINT23)
PB0(ICP1/CLKO/PCINT0)
PB1(OC1A/PCINT1)
PB2(SS/OC1B/PCINT2)
PB3(MOSI/OC2A/PCINT3)
PB4(MISO/PCINT4)
PB5(SCK/PCINT5)
VCC
AVCC
AREF
AGND
ADC6
ADC7
T_PREHEAT
T_SOLDER_2
GERKON
DATA
STROB
CLK
TO_FAN
T_SOLDER_1
RXD(TX)
TXD(RX)
PWM_SOL_2
BUZZER
AIR
PWM_SOL_1
PWM_FEN_P
PWM_EXT
PWM_PRH(MISO)
KEY(SCK)
1D3 ATMEGA168-AU
GND
CLK
STROB
DATA
KEY(SCK)
GND CD+
I7 O7
I6 O6
I5 O5
I4 O4
I3 O3
I2 O2
I1 O1
M_AIR
M_PRH
M_FEN
R_FEN
R_EXT
R_PREH
ULN2003D
1D4
POWER
S_REL
FAN_PW
4VD13
T_SOLDER_2
T_SOLDER_1
T_PREHEAT
1R3 10k
1R24 150k
1R21 33k
1R7 1k*
GERKON
TI_FAN
1R11 10k
1C3 100n
1C7 100n
1R15 1k*
1R19 100
1C6 100n
1R28 1M
TO_FAN
1D2B LM358D
1C10 100n
PREH_C
TI_PREHEAT
GND
M_PRH
+24V
FAN_C
TI_FAN
GND
GERKON
M_FEN
+24V
1R33 510
EXTERNAL
10K1
MOC3063
1R40 390
1T1
1R36 390
1R43 39
EXT-2
EXT-1
1C17 100nx400v
~220V_A
1R1 10k
1R22 150k
1R5 1k
1R9 10k
1C1 100n
1R13 1k
1C5 100n
LM358D
1D1A
1R27 1M
1C8 100n
1R17 100
T_PREHEAT
PWM_FEN_P
1R35 510
10K3
1R42 390
1T3
1R39 390
1C19 100nx400v
PWFAN-1
PWFAN-2
1R45 39
FAN_PW1
PWM_PRH(MISO)
1R34 510
10K2
1R41 390
1T2
1R37 390
1R44 39
1C18 100nx400v
PWPRH-1
PWPRH-2