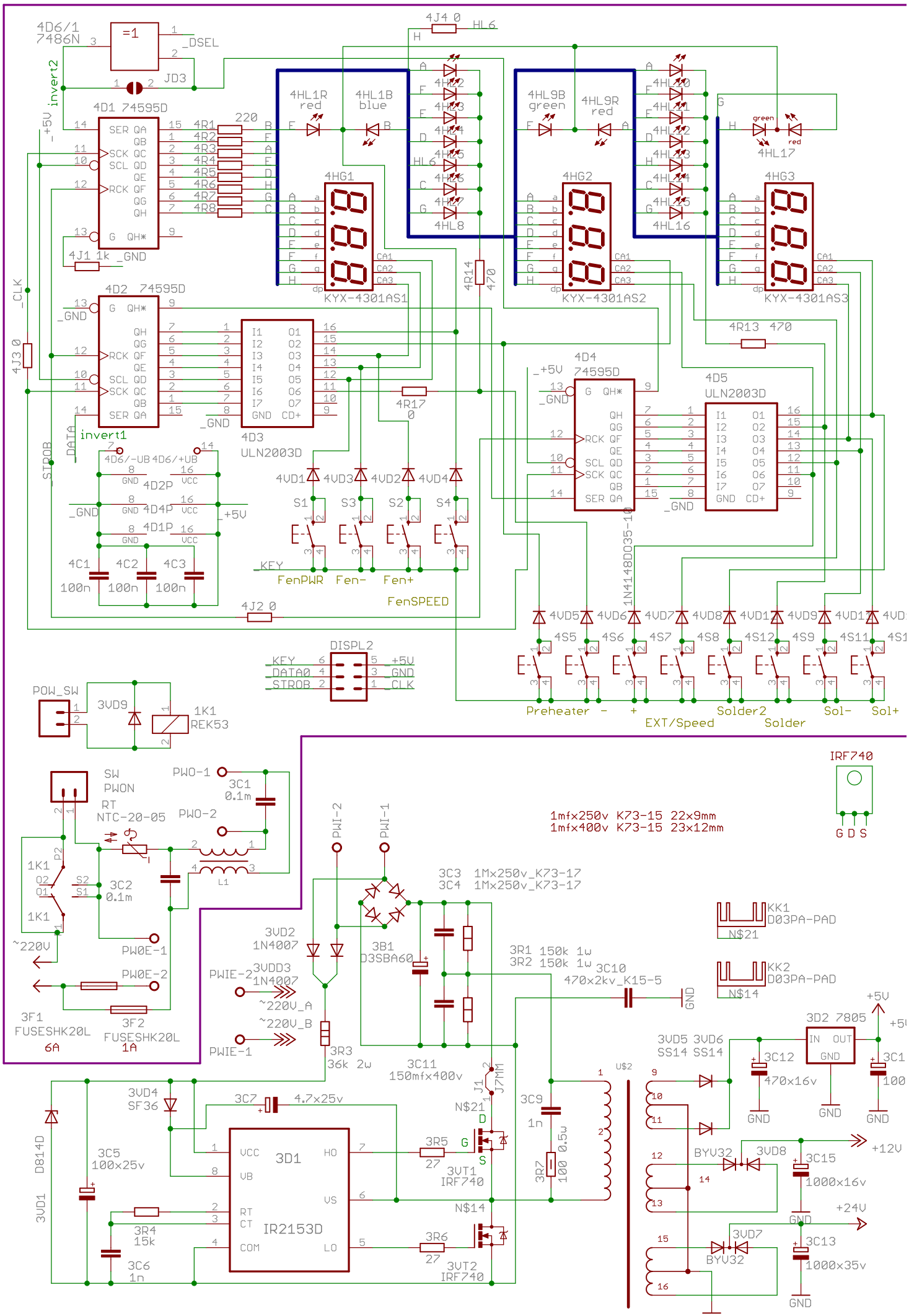
4D6/1
7486N
=1
_DSEL
JD3
invert2
+5V
4D1 74595D
SER QA
QB
SCK QC
SCL QD
QE
RCK QF
QG
QH
G QH*
4R1
4R2
4R3
4R4
4R5
4R6
4R7
4R8
220
4J1 1k
_GND
4HL1R
red
4HL1B
blue
4HG1
KYX-4301AS1
4J4 0
HL6
4HL9B
green
4HL9R
red
4HG2
KYX-4301AS2
4HL16
4HL17
green
red
4HG3
KYX-4301AS3
4R14
470
4R13 470
4D2 74595D
_CLK
4J3 0
invert1
_DATA
_STROB
4D3
ULN2003D
4R17
0
4D4
74595D
4D5
ULN2003D
4D6/-UB
4D6/+UB
4D2P
4D4P
4D1P
GND
VCC
4C1
4C2
4C3
100n
4VD1
4VD3
4VD2
4VD4
S1
S3
S2
S4
_KEY
FenPWR
Fen-
Fen+
FenSPEED
4J2 0
1N4148DO35-10
4VD5
4VD6
4VD7
4VD8
4VD9
4S5
4S6
4S7
4S8
4S12
4S9
4S11
Preheater
-
+
EXT/Speed
Solder2
Solder
Sol-
Sol+
DISPL2
_KEY
_DATA0
_STROB
+5V
_GND
_CLK
POW_SW
3VD9
1K1
REK53
SW
PWON
RT
NTC-20-05
PWO-1
PWO-2
3C1
0.1m
3C2
0.1m
L1
1K1
~220V
PW0E-1
PW0E-2
3F1
FUSESHK20L
6A
3F2
FUSESHK20L
1A
PWI-2
PWI-1
3VD2
1N4007
3VDD3
1N4007
PWIE-2
PWIE-1
~220V_A
~220V_B
3R3
36k 2w
3B1
D3SBA60
3C3 1Mx250v_K73-17
3C4 1Mx250v_K73-17
1mfx250v K73-15 22x9mm
1mfx400v K73-15 23x12mm
IRF740
G D S
3R1 150k 1w
3R2 150k 1w
3C10
470x2kv_K15-5
GND
KK1
D03PA-PAD
N$21
KK2
D03PA-PAD
N$14
3C11
150mfx400v
J1
J7MM
N$21
3C9
1n
3R7
100 0.5w
U$2
3VD4
SF36
3C7
4.7x25v
D814D
3VD1
3C5
100x25v
3D1
IR2153D
VCC
VB
HO
VS
RT
CT
COM
LO
3R4
15k
3C6
1n
3R5
27
3VT1
IRF740
N$14
3R6
27
3VT2
IRF740
3VD5 3VD6
SS14 SS14
3D2 7805
IN
OUT
GND
3C12
470x16v
3C1
100
+5V
+12V
+24V
BYV32
3VD8
3C15
1000x16v
3VD7
BYV32
3C13
1000x35v

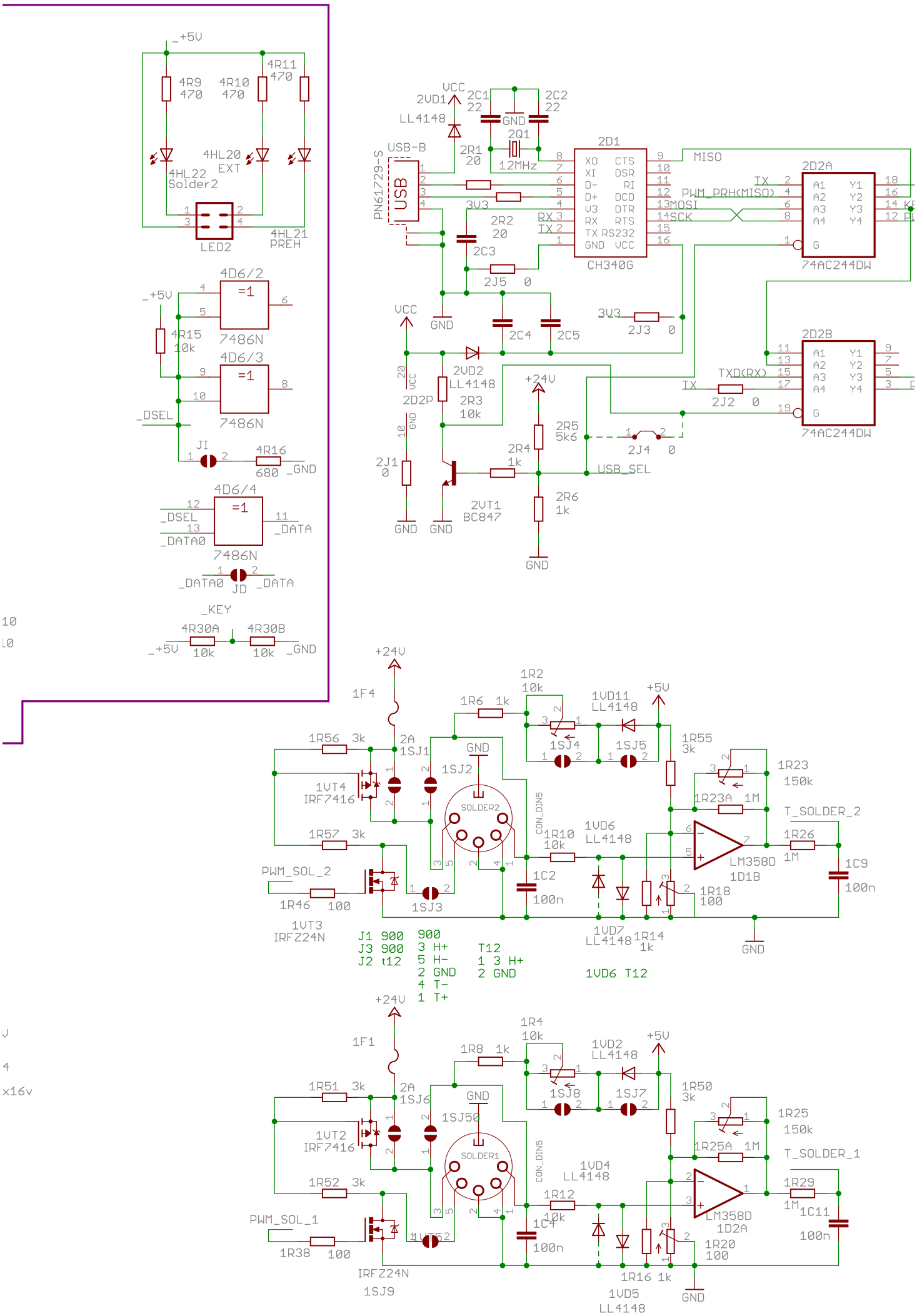
_+5V
4R9 470
4R10 470
4R11 470
4HL20 EXT
4HL22 Solder2
4HL21 PREH
LED2
4D6/2
=1
7486N
4R15 10k
4D6/3
_DSEL
JI
4R16 680
_GND
4D6/4
_DATA0
_DATA
JD
_KEY
4R30A 10k
4R30B 10k
VCC
2VD1 LL4148
2C1 22
2C2 22
2Q1 12MHz
2R1 20
USB-B
PN61729-S
USB
3V3
2R2 20
2C3
2J5 0
2D1
XO CTS
XI DSR
D- RI
D+ DCD
V3 DTR
RX RTS
TX RS232
GND VCC
CH340G
MISO
MOSI
SCK
PWM_PRH(MISO)
2D2A
A1 Y1
A2 Y2
A3 Y3
A4 Y4
G
74AC244DW
2C4
2C5
2J3 0
2VD2 LL4148
2D2P
2R3 10k
+24V
2R5 5k6
2J4 0
2D2B
TXD(RX)
2J2 0
2J1 0
2R4 1k
USB_SEL
2VT1 BC847
2R6 1k
1F4
1R6 1k
1R2 10k
1VD11 LL4148
+5V
1SJ4
1SJ5
1R55 3k
1R56 3k
2A 1SJ1
1SJ2
1VT4 IRF7416
SOLDER2
CON_DIN5
1R23 150k
1R23A 1M
T_SOLDER_2
1R57 3k
1R10 10k
1VD6 LL4148
1R26 1M
LM358D 1D1B
1C9 100n
PWM_SOL_2
1R46 100
1SJ3
1C2 100n
1R18 100
1VT3 IRFZ24N
1VD7 LL4148
1R14 1k
J1 900 900
J3 900 3 H+
J2 t12 5 H-
2 GND
4 T-
1 T+
T12
1 3 H+
2 GND
1VD6 T12
1F1
1R8 1k
1R4 10k
1VD2 LL4148
1SJ8
1SJ7
1R50 3k
1R51 3k
2A 1SJ6
1SJ50
1VT2 IRF7416
SOLDER1
1R25 150k
1R25A 1M
T_SOLDER_1
1R52 3k
1R12 10k
1VD4 LL4148
1R29 1M
LM358D 1D2A
1C11 100n
PWM_SOL_1
1R38 100
1VT52
1C4 100n
1R20 100
IRFZ24N
1SJ9
1R16 1k
1VD5 LL4148

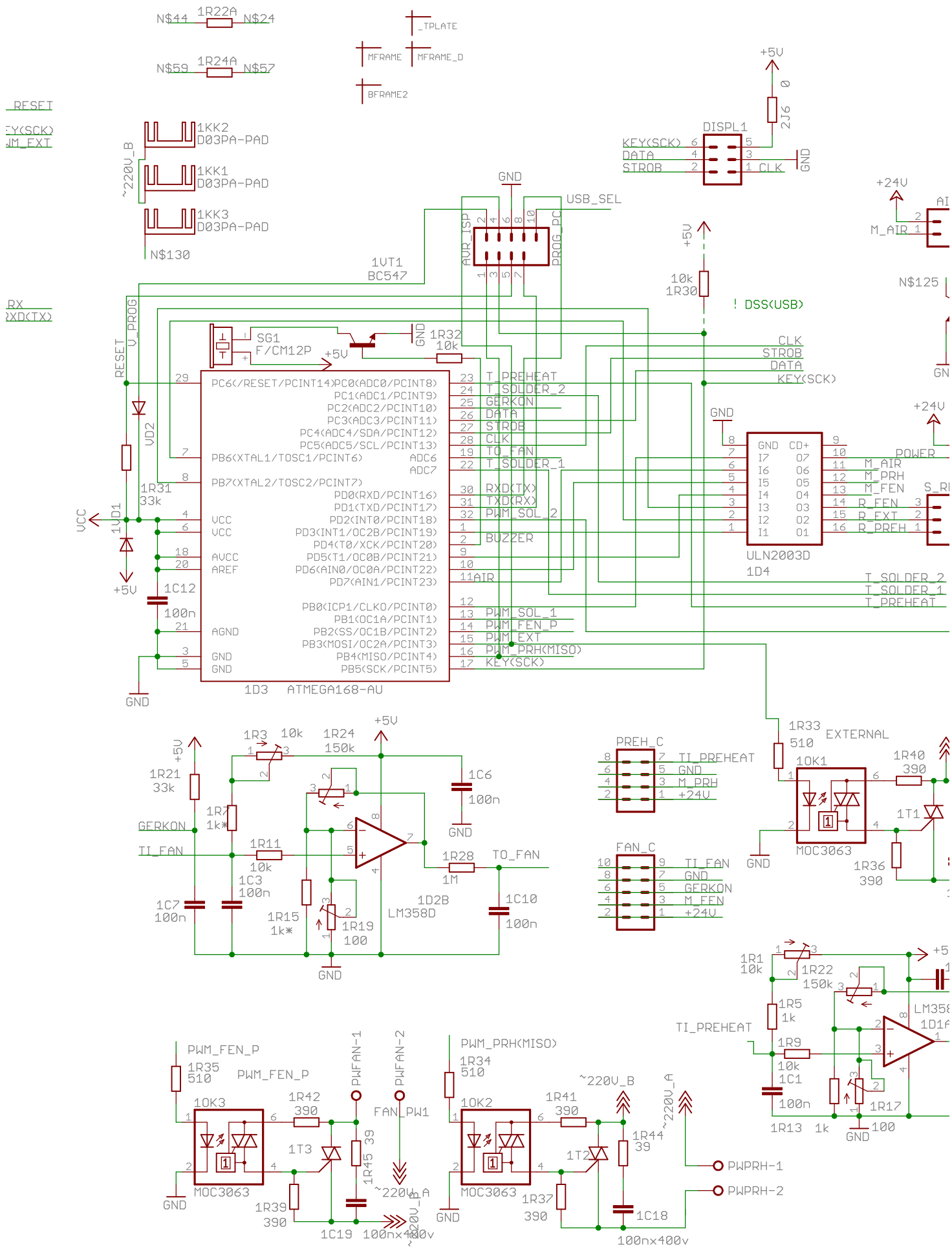
N$44
1R22A
N$24
N$59
1R24A
N$57
_TPLATE
MFRAME
MFRAME_D
BFRAME2
_RESET
EY(SCK)
M_EXT
RX
XD(TX)
1KK2
D03PA-PAD
1KK1
D03PA-PAD
1KK3
D03PA-PAD
~220V_B
N$130
+5V
2J6
0
DISPL1
KEY(SCK)
DATA
STROB
CLK
GND
USB_SEL
AVR_ISP
PROG_PC
1VT1
BC547
10k
1R30
! DSS(USB)
+24V
M_AIR
N$125
SG1
F/CM12P
1R32
10k
RESET
V_PROG
VD2
1R31
33k
1VD1
VCC
1C12
100n
PC6(/RESET/PCINT14)
PC0(ADC0/PCINT8)
PC1(ADC1/PCINT9)
PC2(ADC2/PCINT10)
PC3(ADC3/PCINT11)
PC4(ADC4/SDA/PCINT12)
PC5(ADC5/SCL/PCINT13)
PB6(XTAL1/TOSC1/PCINT6)
ADC6
ADC7
PB7(XTAL2/TOSC2/PCINT7)
PD0(RXD/PCINT16)
PD1(TXD/PCINT17)
PD2(INT0/PCINT18)
PD3(INT1/OC2B/PCINT19)
PD4(T0/XCK/PCINT20)
PD5(T1/OC0B/PCINT21)
PD6(AIN0/OC0A/PCINT22)
PD7(AIN1/PCINT23)
PB0(ICP1/CLKO/PCINT0)
PB1(OC1A/PCINT1)
PB2(SS/OC1B/PCINT2)
PB3(MOSI/OC2A/PCINT3)
PB4(MISO/PCINT4)
PB5(SCK/PCINT5)
AVCC
AREF
AGND
1D3 ATMEGA168-AU
T_PREHEAT
T_SOLDER_2
GERKON
DATA
STROB
CLK
TO_FAN
T_SOLDER_1
RXD(TX)
TXD(RX)
PWM_SOL_2
BUZZER
AIR
PWM_SOL_1
PWM_FEN_P
PWM_EXT
PWM_PRH(MISO)
KEY(SCK)
ULN2003D
1D4
POWER
M_PRH
M_FEN
R_FEN
R_EXT
R_PREH
1R3
10k
1R24
150k
1R21
33k
1R7
1k*
1R11
10k
1C3
100n
1C7
100n
1R15
1k*
1R19
100
1C6
100n
1R28
1M
1D2B
LM358D
1C10
100n
PREH_C
FAN_C
1R33
510
EXTERNAL
10K1
MOC3063
1R40
390
1T1
1R36
390
1R1
10k
1R22
150k
1R5
1k
1R9
10k
1C1
100n
1R13
1k
1R17
100
LM358
1D1A
PWM_FEN_P
1R35
510
10K3
1R42
390
PWFAN-1
PWFAN-2
FAN_PW1
1T3
1R45
39
1R39
390
1C19
100nx400v
~220V_A
PWM_PRH(MISO)
1R34
510
10K2
1R41
390
1T2
1R44
39
1R37
390
1C18
100nx400v
PWPRH-1
PWPRH-2

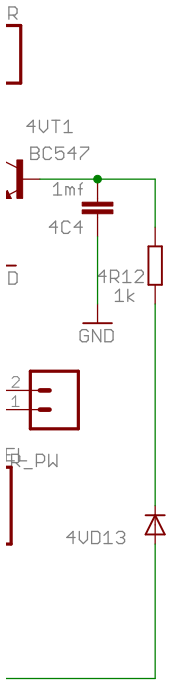
R
4VT1
BC547
1mf
4C4
4R12
1k
GND
D
2
1
_PW
4VD13

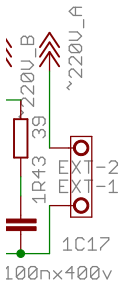
~220V_B
~220V_A
39
1R43
EXT-2
EXT-1
1C17
100nx400v

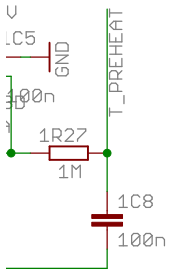
V
C5
GND
100n
T_PREHEAT
1R27
1M
1C8
100n