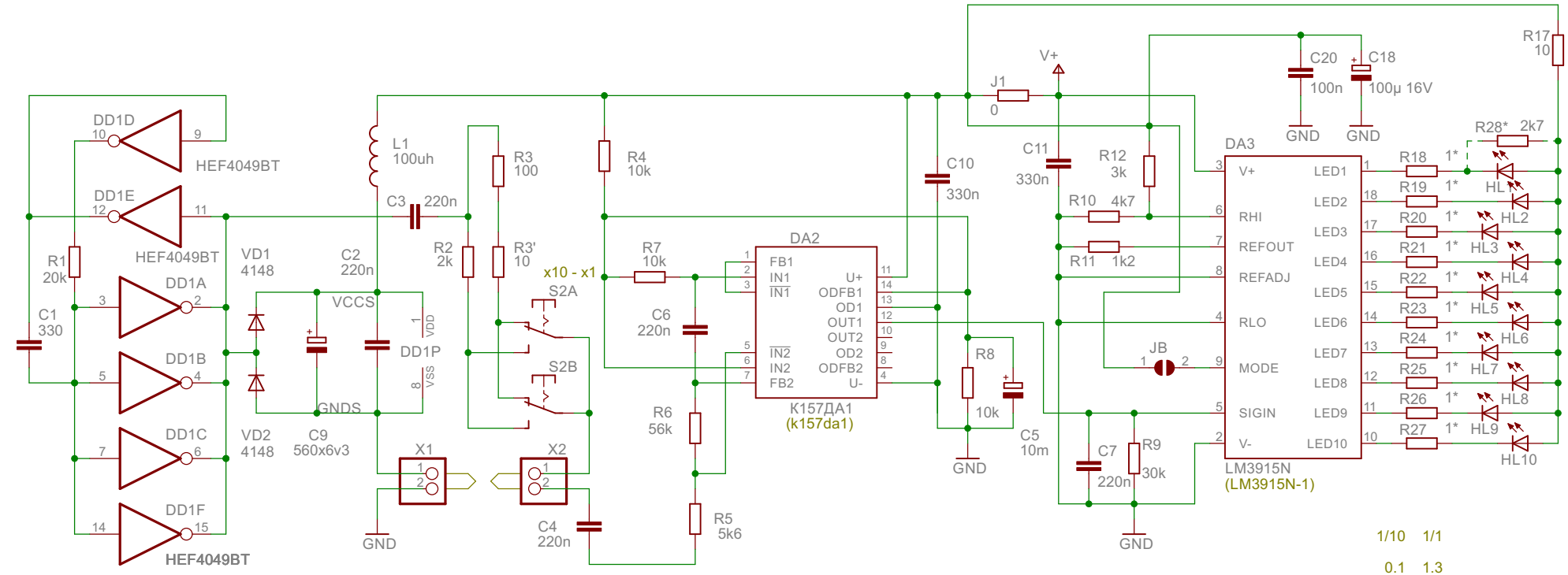

1/10	1/1
0.1	1.3
0.2	1.9
0.3	2.7
0.4	3.8
0.5	5.3
0.8	7.5
1.1	10.6
1.5	15
2.1	21.2
3	30

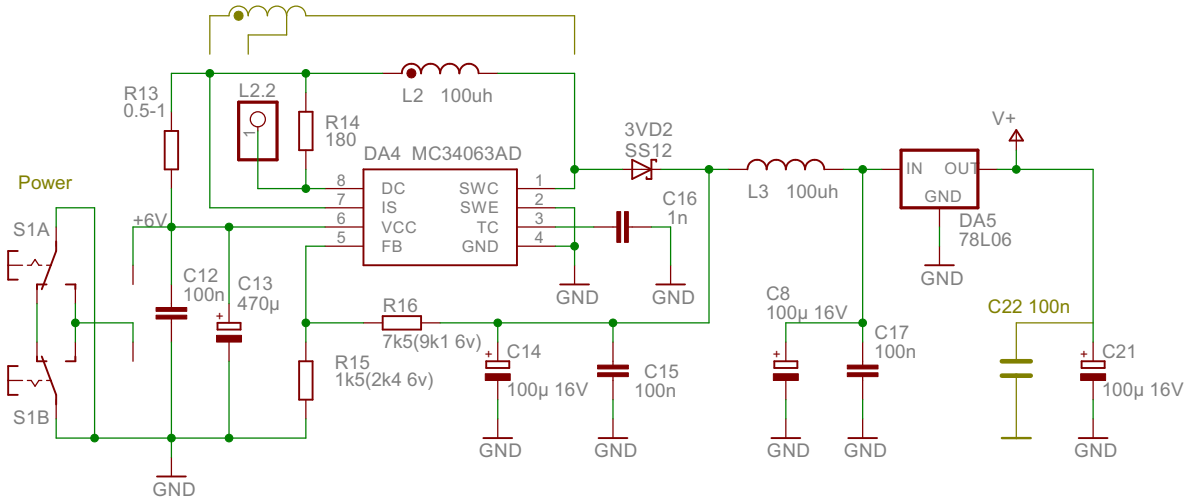

TITLE: ESR_NM8032

Document Number:

REV:

Date: 2020-01-29 2:55:51

Sheet: 1/1