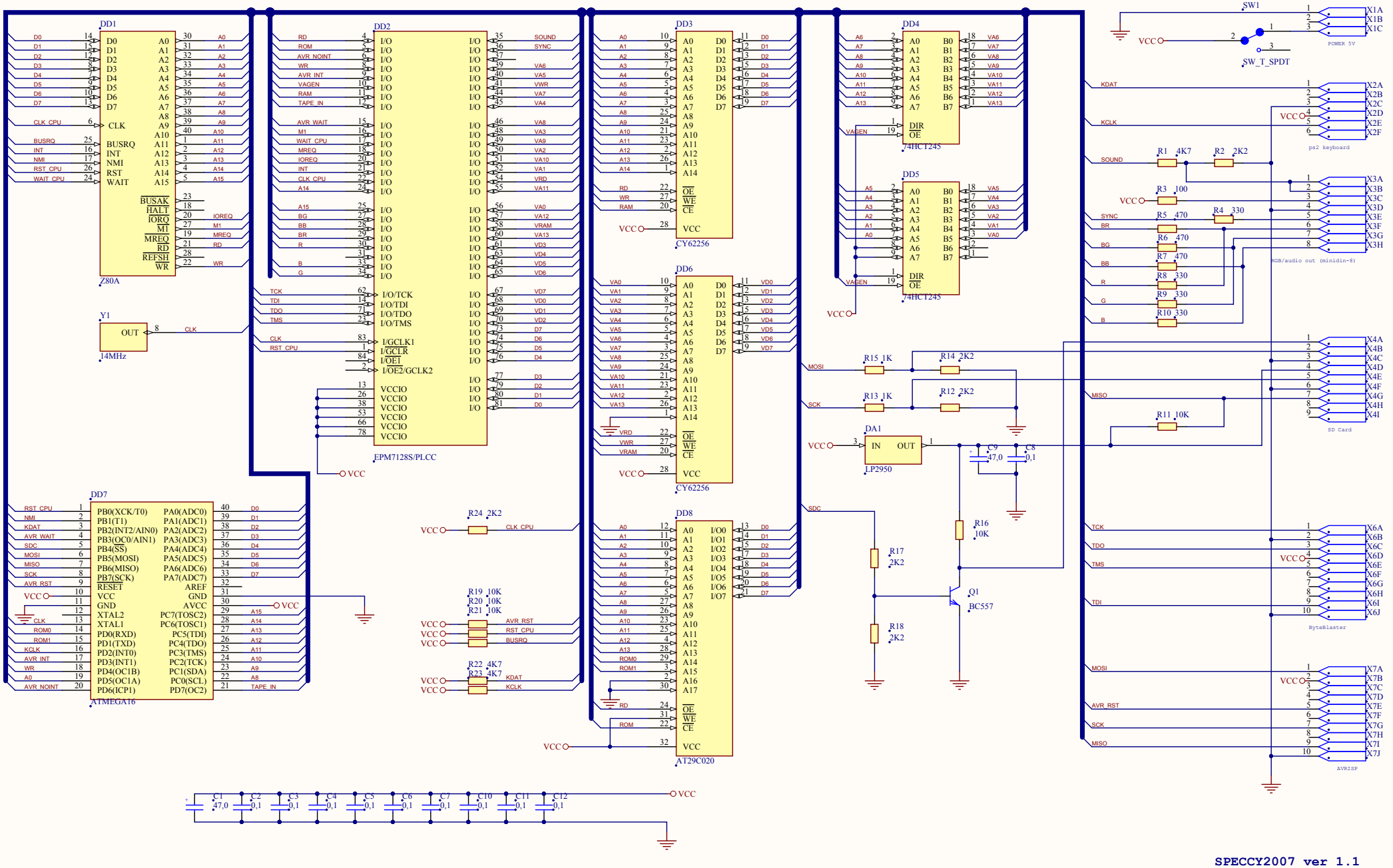
DD1
Z80A
DD2
EPM7128S/PLCC
DD3
CY62256
DD4
74HCT245
DD5
74HCT245
DD6
CY62256
DD7
ATMEGA16
DD8
AT29C020
Y1
14MHz
DA1
LP2950
Q1
BC557
SW1
SW_T_SPDT
POWER 5V
ps2 keyboard
RGB/audio out (minidin-8)
SD Card
ByteBlaster
AVRISP
VCC
SPECCY2007 ver 1.1