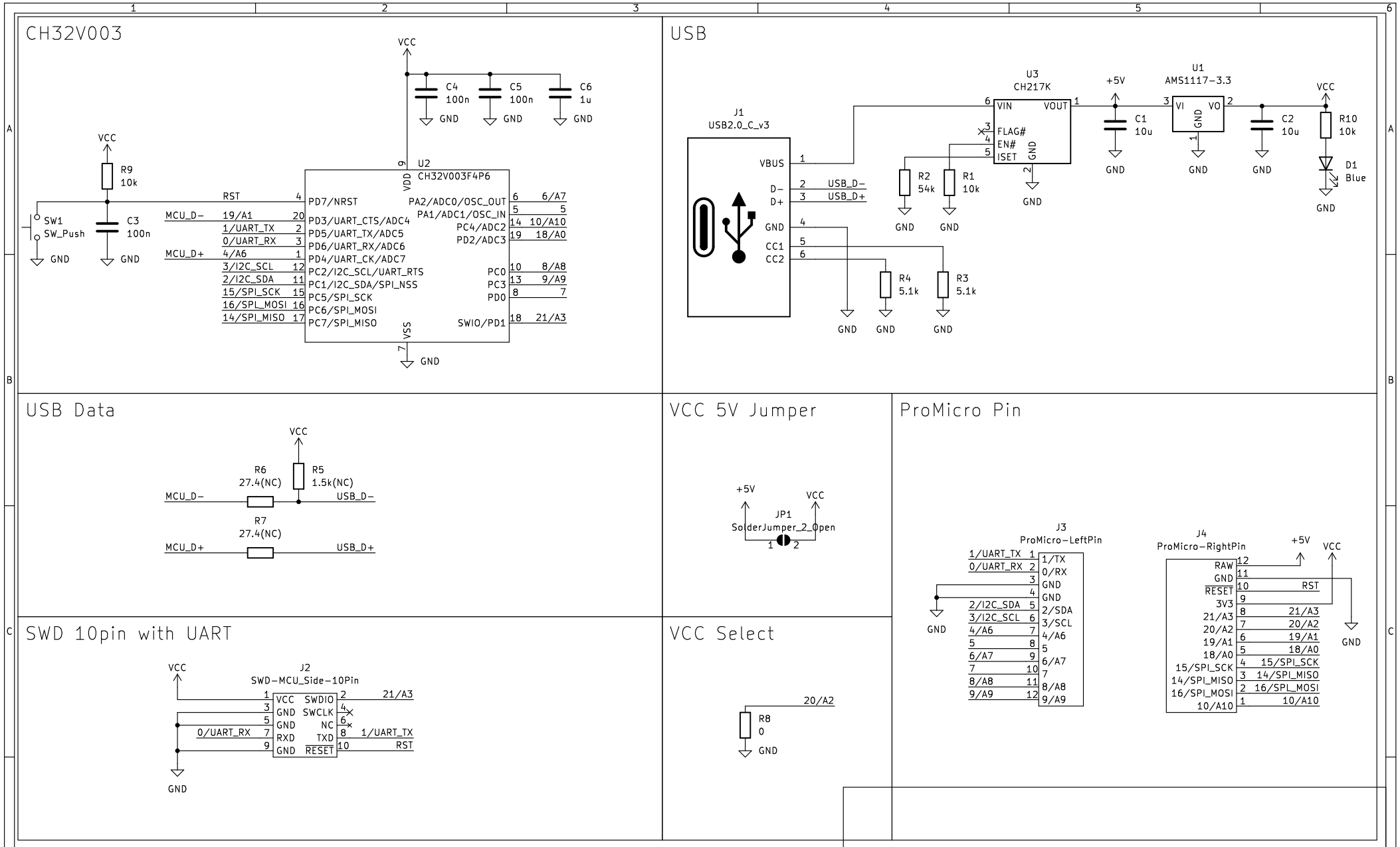


Sheet: /
File: ch32v003−promicro.kicad_sch

**Title: CH32V003ProMicro**

| Size: A4 | Date: | Rev: |
|---|---|---|
| KiCad E.D.A. kicad 7.0.5−0 | | Id: 1/1 |