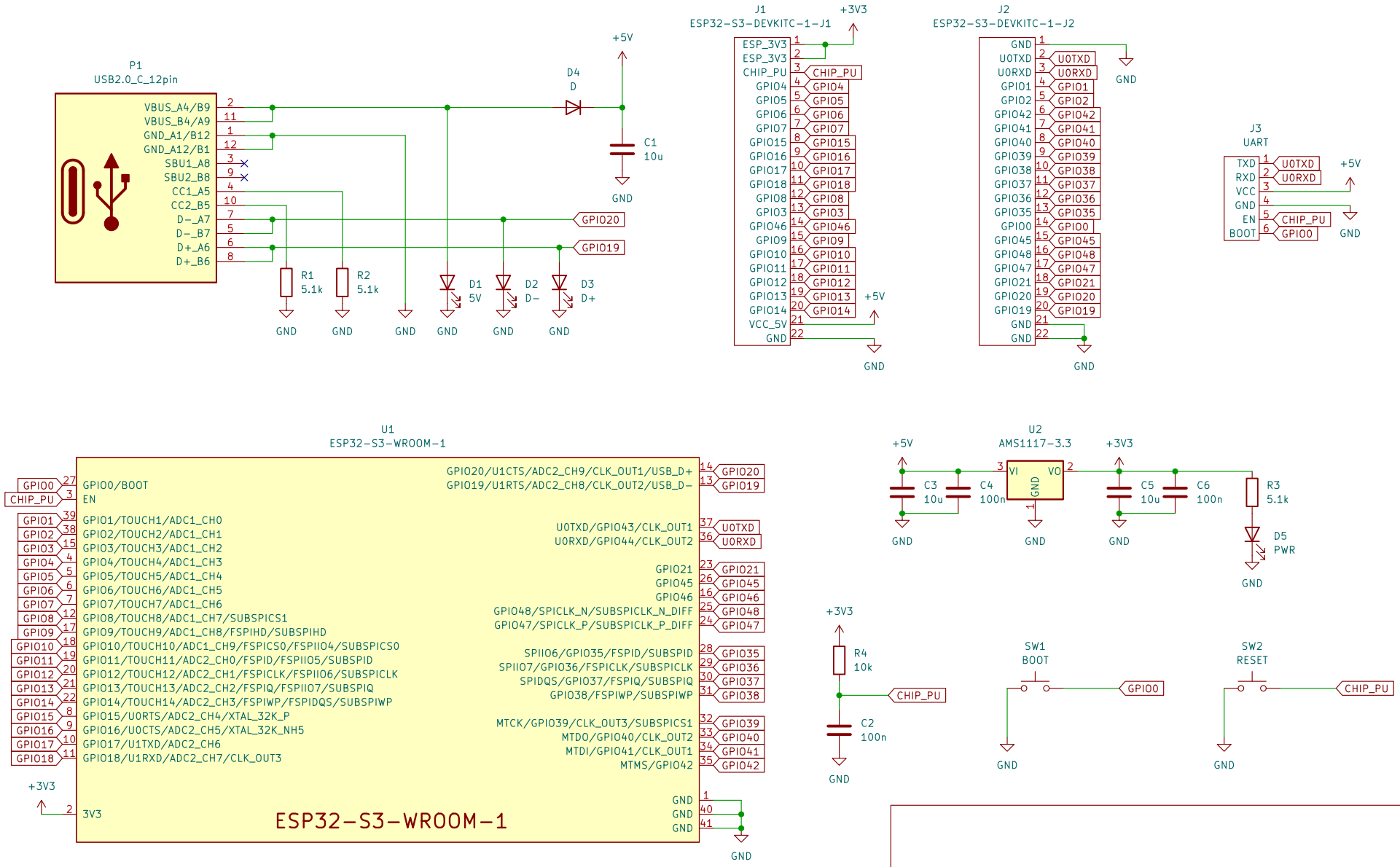

Sheet: /
File: ESP32-S3-WROOM-1.kicad_sch

Title:

Size: A4	Date:	Rev:
KiCad E.D.A. kicad 6.0.5-a6ca702e91~116~ubuntu22.04.1		Id: 1/1