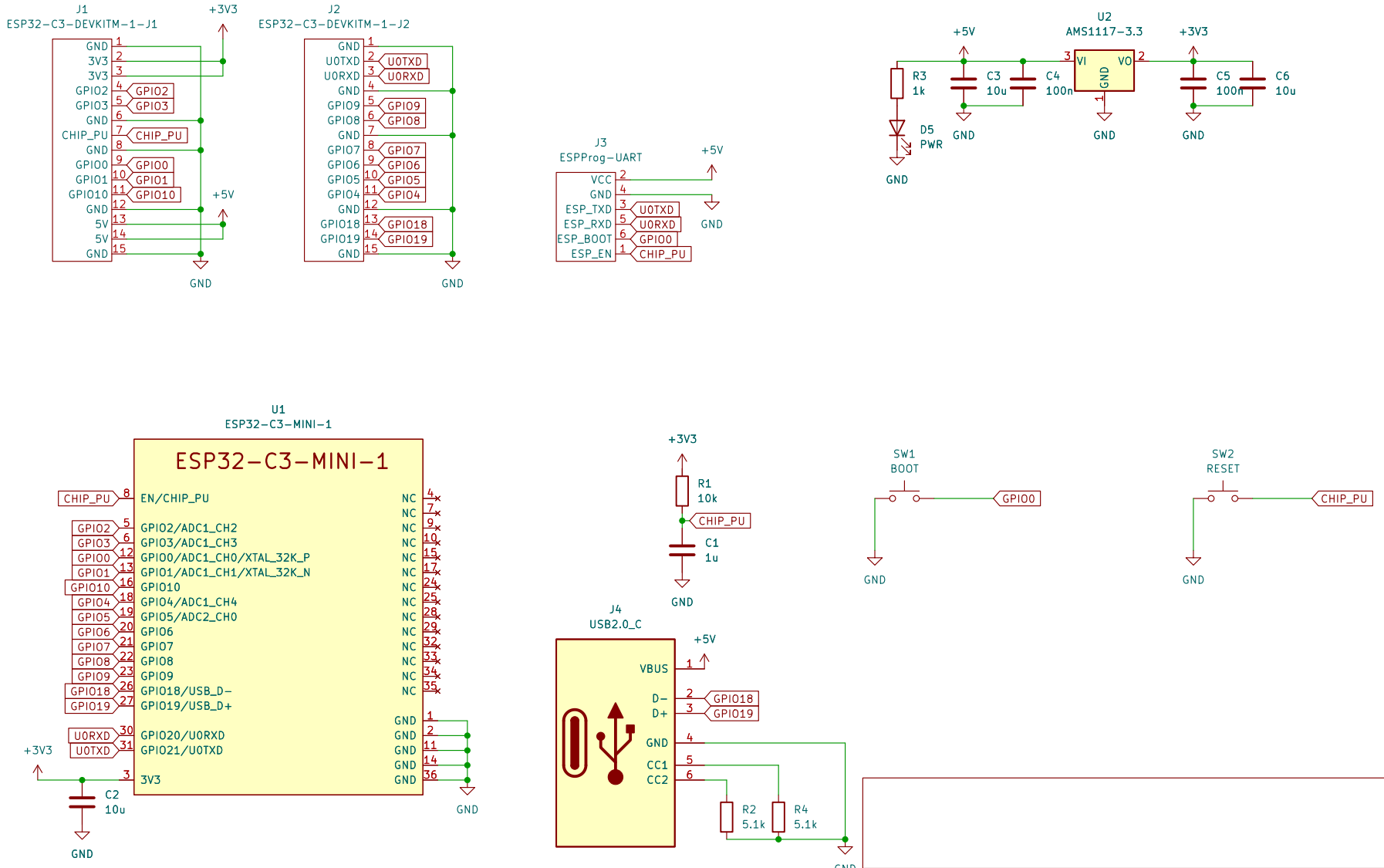

Sheet: /
File: ESP32-C3-MINI-1.kicad_sch

Title:

Size: A4	Date:	**Rev:**
KiCad E.D.A. kicad 6.0.7-f9a2dced07~116~ubuntu22.04.1		Id: 1/1