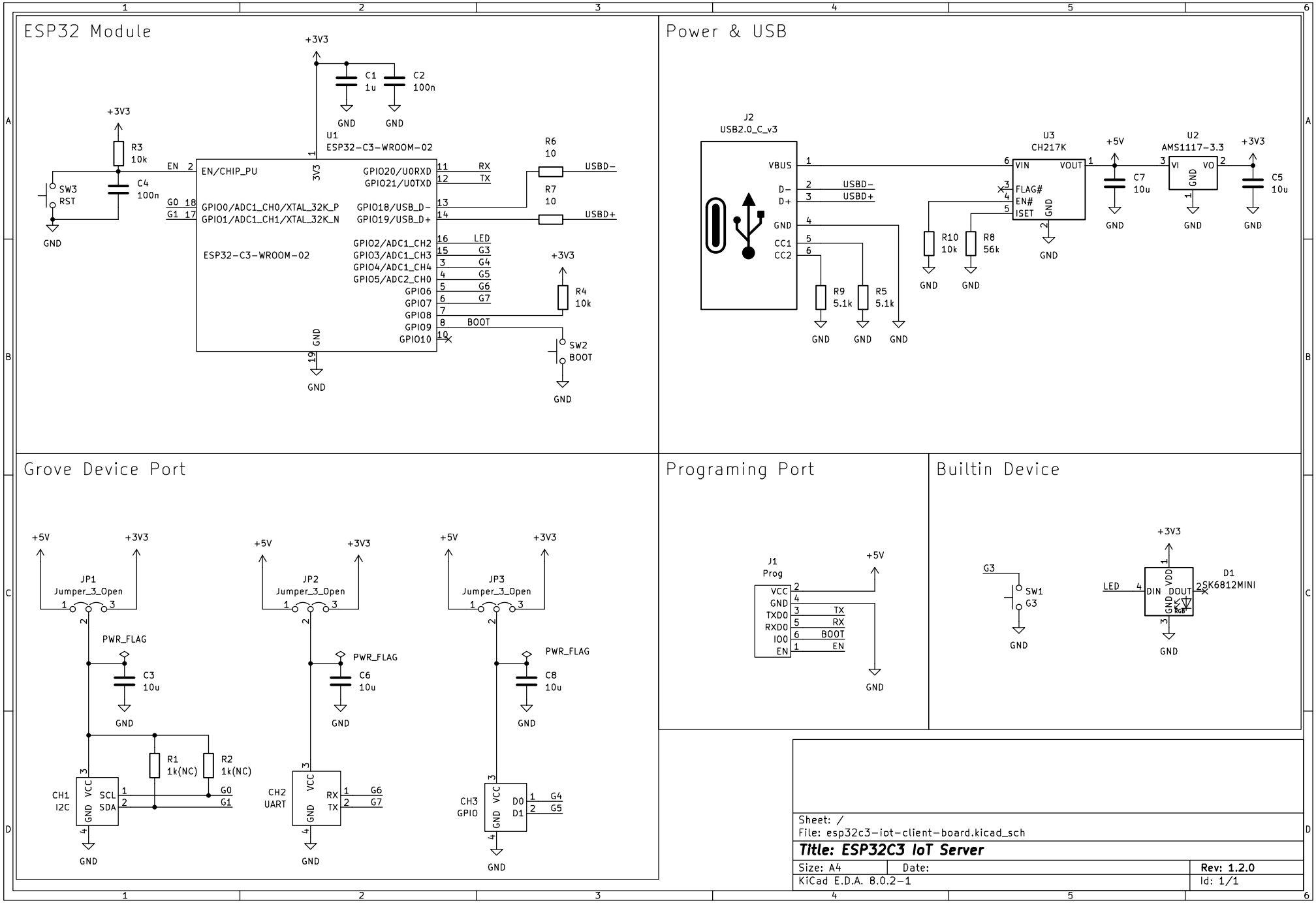
ESP32 Module
+3V3
C1
1u
C2
100n
GND
GND
U1
ESP32-C3-WROOM-02
R3
10k
SW3
RST
C4
100n
EN
EN/CHIP_PU
3V3
G0
G1
GPIO0/ADC1_CH0/XTAL_32K_P
GPIO1/ADC1_CH1/XTAL_32K_N
ESP32-C3-WROOM-02
GND
GPIO20/U0RXD
GPIO21/U0TXD
GPIO18/USB_D-
GPIO19/USB_D+
GPIO2/ADC1_CH2
GPIO3/ADC1_CH3
GPIO4/ADC1_CH4
GPIO5/ADC2_CH0
GPIO6
GPIO7
GPIO8
GPIO9
GPIO10
RX
TX
LED
G3
G4
G5
G6
G7
BOOT
R6
10
R7
10
USBD-
USBD+
R4
10k
SW2
BOOT
Power & USB
J2
USB2.0_C_v3
VBUS
D-
D+
GND
CC1
CC2
R9
5.1k
R5
5.1k
U3
CH217K
VIN
VOUT
FLAG#
EN#
ISET
R10
10k
R8
56k
+5V
C7
10u
U2
AMS1117-3.3
VI
VO
C5
10u
Grove Device Port
+5V
+3V3
JP1
Jumper_3_Open
PWR_FLAG
C3
10u
R1
1k(NC)
R2
1k(NC)
CH1
I2C
VCC
SCL
SDA
JP2
Jumper_3_Open
C6
10u
CH2
UART
RX
TX
JP3
Jumper_3_Open
C8
10u
CH3
GPIO
D0
D1
Programing Port
J1
Prog
VCC
GND
TXD0
RXD0
IO0
EN
Builtin Device
G3
SW1
G3
LED
DIN
VDD
DOUT
D1
SK6812MINI
Sheet: /
File: esp32c3-iot-client-board.kicad_sch
Title: ESP32C3 IoT Server
Size: A4
Date:
Rev: 1.2.0
KiCad E.D.A. 8.0.2-1
Id: 1/1