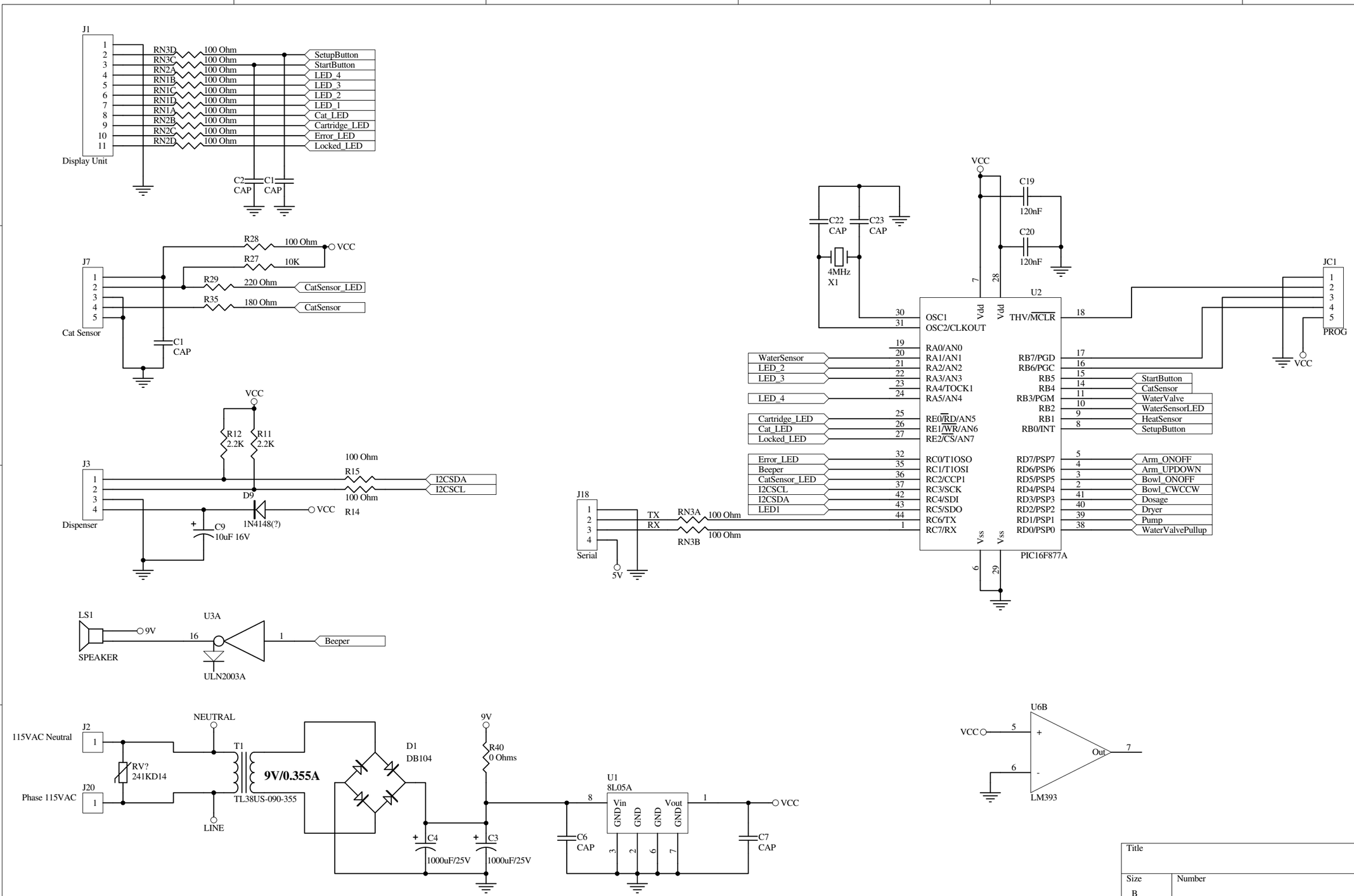

Title		
Size B	Number	Revision
Date: 25-Apr-2015	Sheet of	
File: L:\CatGenius\..\CG120_16F877_Micro.sch	Drawn By:	