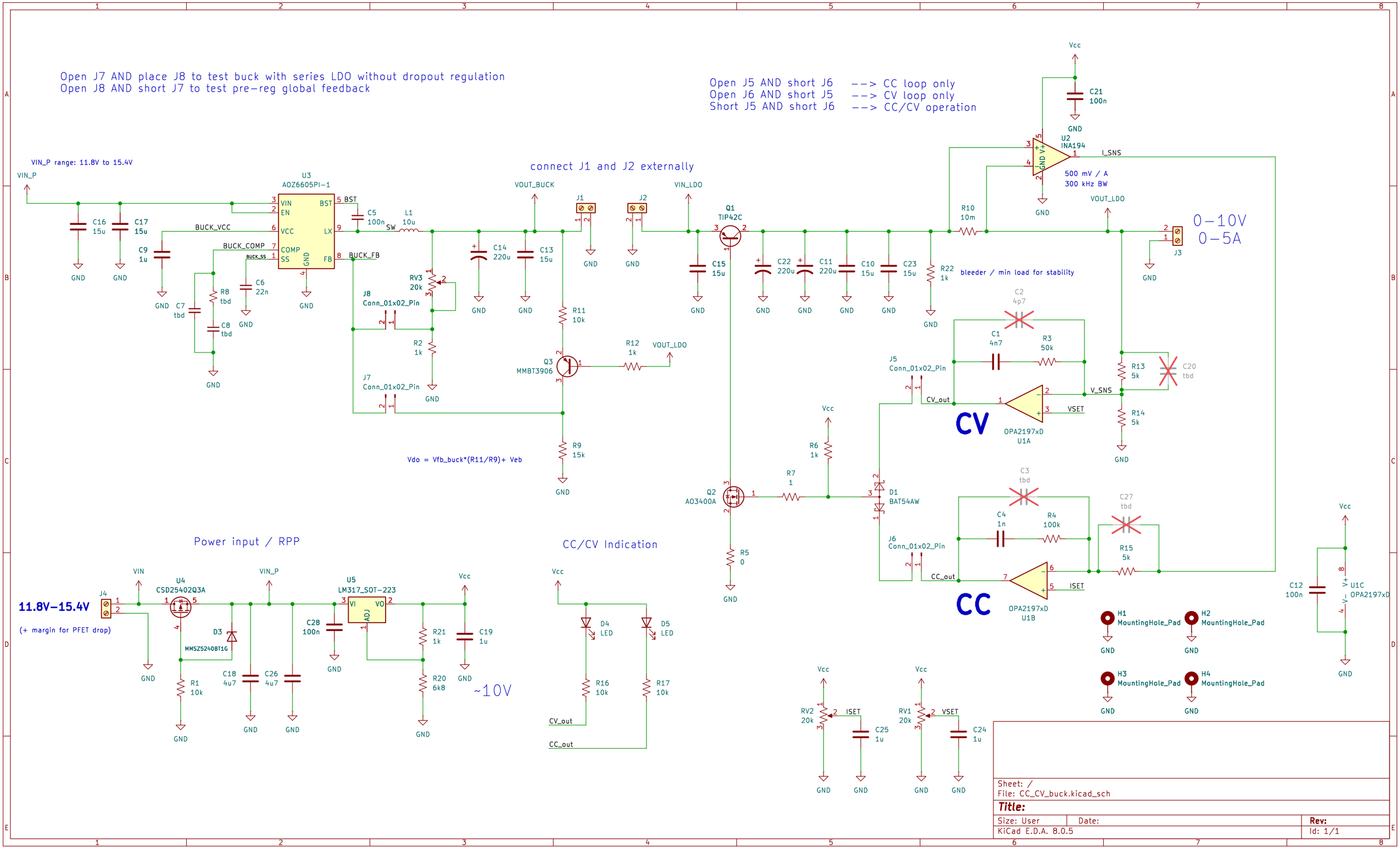

Sheet: /
File: CC_CV_buck.kicad_sch

Title:

Size: User	Date:	Rev:
KiCad E.D.A. 8.0.5		Id: 1/1