Customer No.:

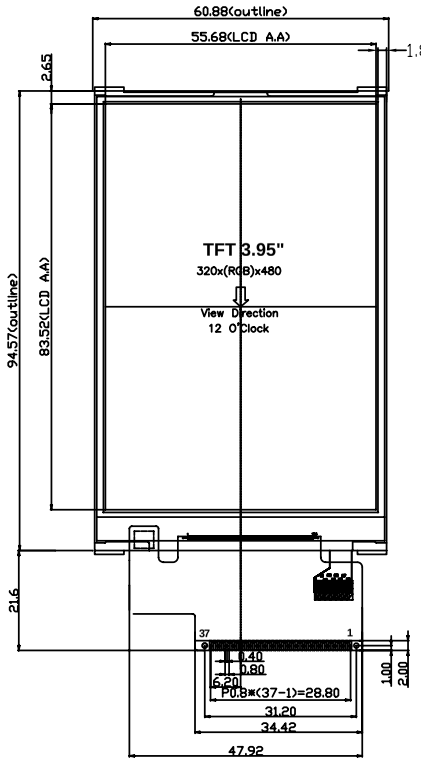

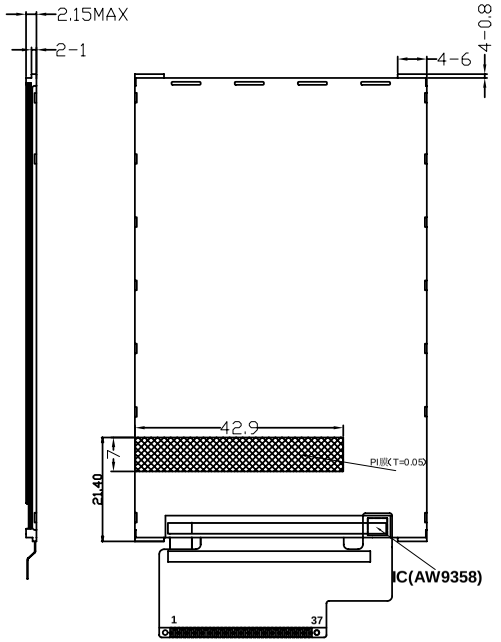

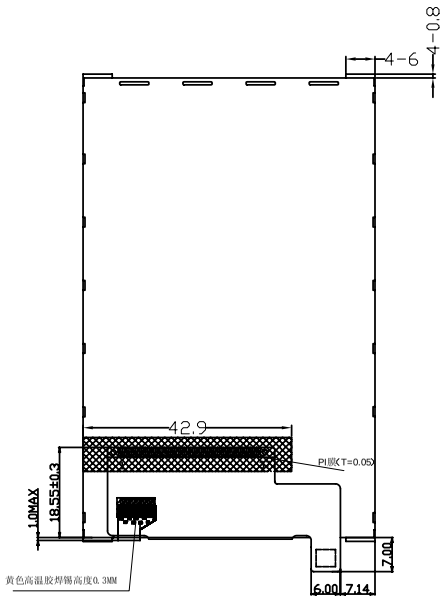

FPC弯折示意图

FPC展开出货

1	GND
2	DB0
3	DB1
4	DB2
5	DB3
6	DB4
7	DB5
8	DB6
9	DB7
10	VDD IO(1.8V/2.8V)
11	WR
12	RD
13	DB9
14	DB10
15	DB12
16	DB13
17	DB15
18	LED-K3(NC)
19	LED-K5(NC)
20	LED-K6(NC)
21	LED-K1(NC)
22	LED-K2(NC)
23	LED-K4(NC)
24	RESET
25	CS
26	RS
27	DB14
28	DB11
29	DB8
30	VCC(2.8V)
31	PULSE_INPUT
32	GND
33	YU(Y+)(NC)
34	YD(Y-)(NC)
35	XR(X+)(NC)
36	XL(X-)(NC)
37	VBAT(LED-A)

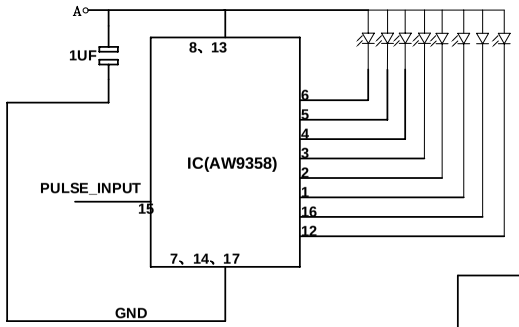

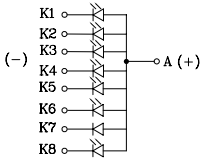

Type	TFT/NORMALLY WHITE/TRANSMISSIVE
Resolution	DOTS:320(R.G.B)*480
Angle	12 O'clock
troller/Driver	ILI9486L
oltage	2.8V
ving Voltage	------
n Temperature	-20°C ~ 70°C
Temperature	-30°C ~ 80°C
t Speciality	White LED Backlight(6 dies) IF=60mA, VF=3.2±0.2V
	TFT LCD+COG IC+LBL+FPC+TP

ANGLE	±1.0°
60.01 -	±0.20
30.01 - 60.00	±0.15
6.01 - 30.00	±0.10

	AMEND		NAME
04			
03			
02			

TOLERANCE:
DECIMAL
.x ± .30
.xx ± .20

深圳市韩彩光电有限公司
ShenZhen Hanncai optoelectronics CO.,LTD.

PRODUCT NO.	DRAW NO.	REV
ASSY-HC-T395004		01

DWN	黄介文	DSN	STEVEN.YIP