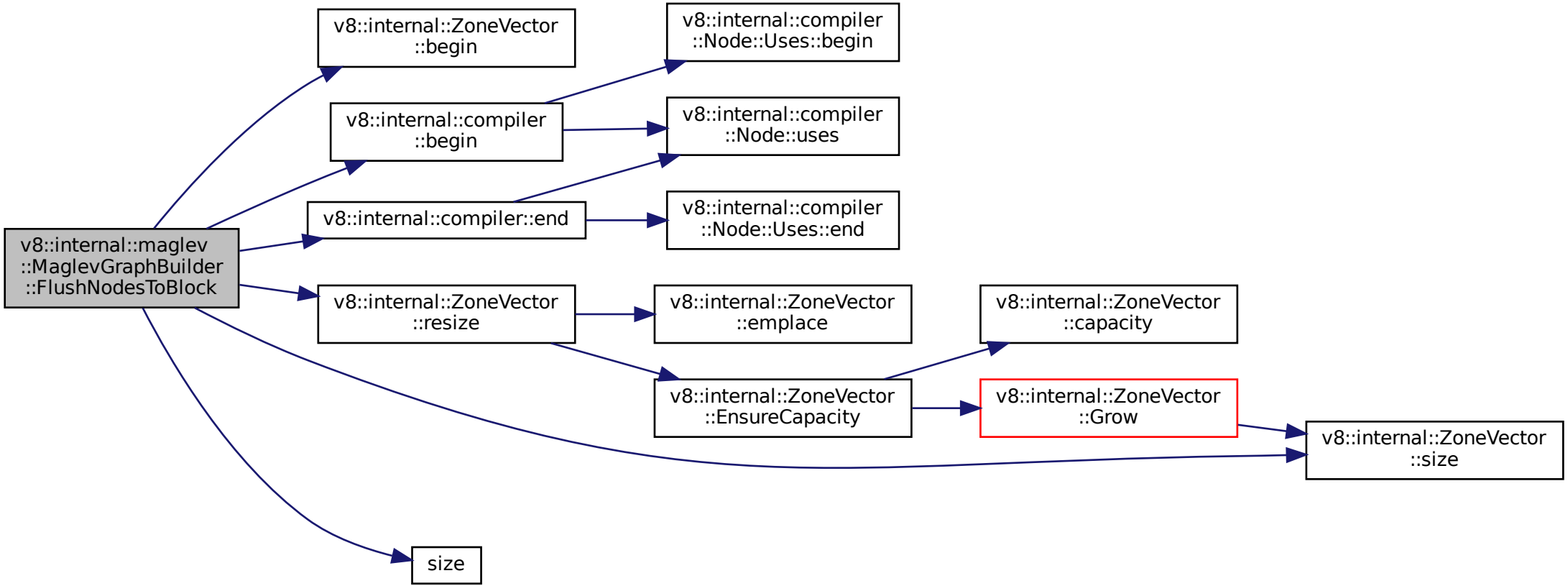
v8::internal::maglev
::MaglevGraphBuilder
::FlushNodesToBlock
v8::internal::ZoneVector
::begin
v8::internal::compiler
::begin
v8::internal::compiler::end
v8::internal::ZoneVector
::resize
size
v8::internal::compiler
::Node::Uses::begin
v8::internal::compiler
::Node::uses
v8::internal::compiler
::Node::Uses::end
v8::internal::ZoneVector
::emplace
v8::internal::ZoneVector
::EnsureCapacity
v8::internal::ZoneVector
::capacity
v8::internal::ZoneVector
::Grow
v8::internal::ZoneVector
::size