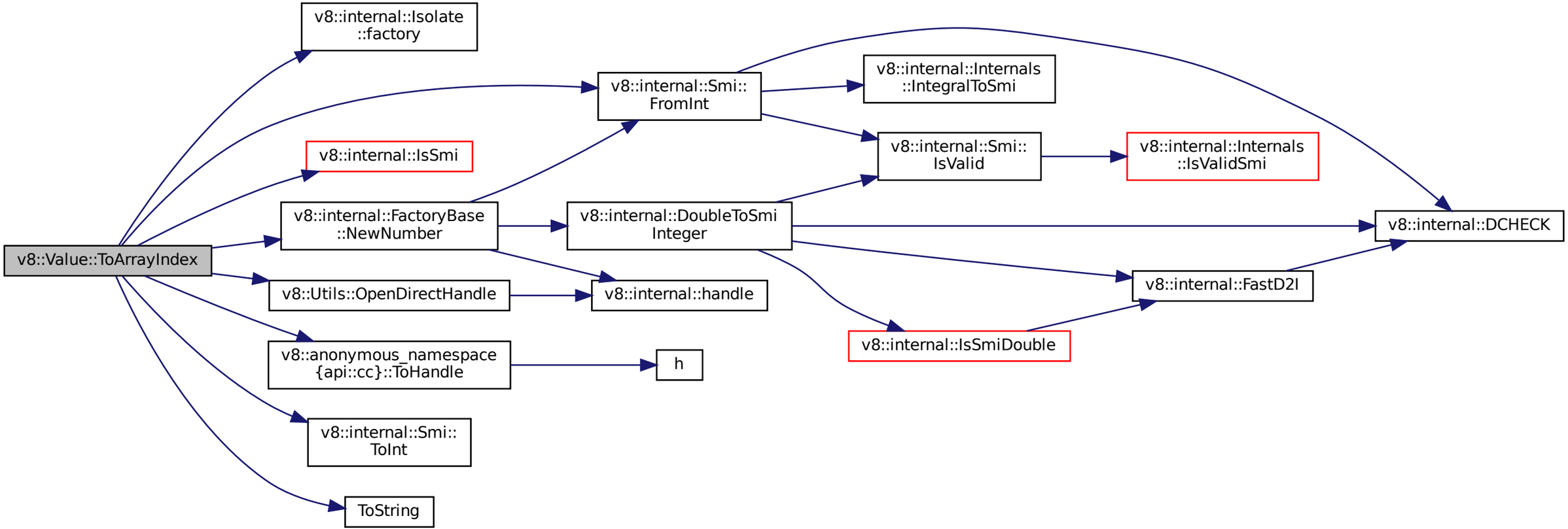
v8::Value::ToArrayIndex
v8::internal::Isolate
::factory
v8::internal::Smi::
FromInt
v8::internal::Internals
::IntegralToSmi
v8::internal::Smi::
IsValid
v8::internal::Internals
::IsValidSmi
v8::internal::IsSmi
v8::internal::FactoryBase
::NewNumber
v8::internal::DoubleToSmi
Integer
v8::internal::DCHECK
v8::Utils::OpenDirectHandle
v8::internal::handle
v8::internal::FastD2I
v8::internal::IsSmiDouble
v8::anonymous_namespace
{api::cc}::ToHandle
h
v8::internal::Smi::
ToInt
ToString