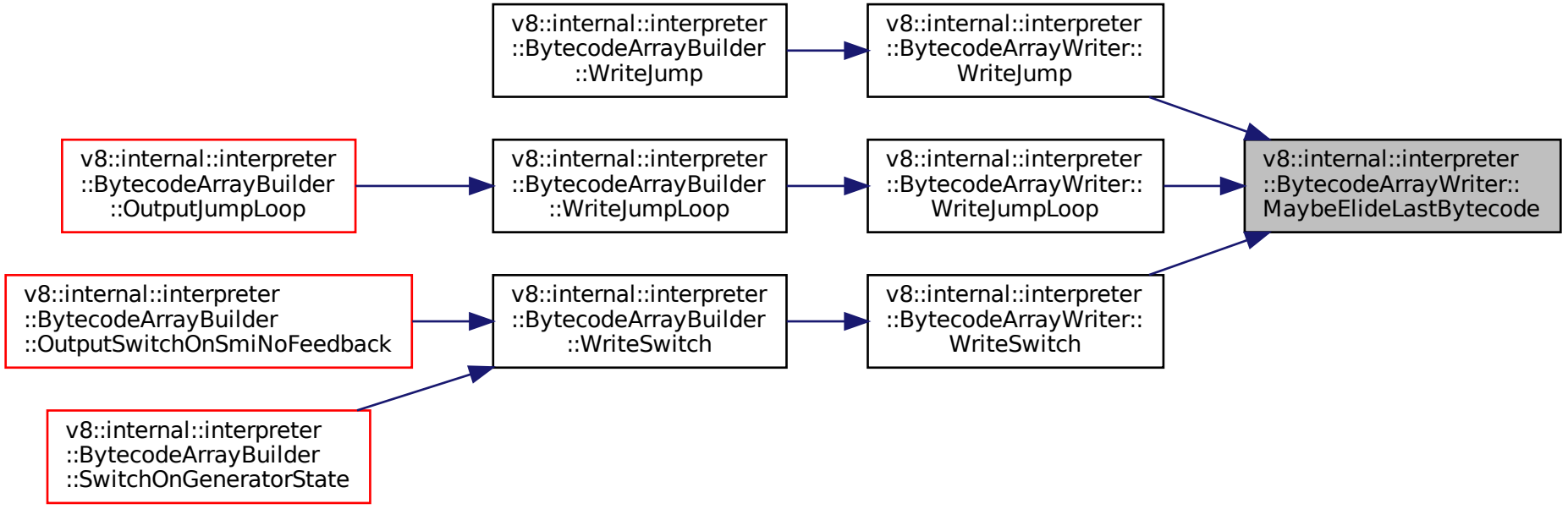
v8::internal::interpreter ::BytecodeArrayBuilder ::WriteJump
v8::internal::interpreter ::BytecodeArrayWriter:: WriteJump
v8::internal::interpreter ::BytecodeArrayBuilder ::OutputJumpLoop
v8::internal::interpreter ::BytecodeArrayBuilder ::WriteJumpLoop
v8::internal::interpreter ::BytecodeArrayWriter:: WriteJumpLoop
v8::internal::interpreter ::BytecodeArrayWriter:: MaybeElideLastBytecode
v8::internal::interpreter ::BytecodeArrayBuilder ::OutputSwitchOnSmiNoFeedback
v8::internal::interpreter ::BytecodeArrayBuilder ::WriteSwitch
v8::internal::interpreter ::BytecodeArrayWriter:: WriteSwitch
v8::internal::interpreter ::BytecodeArrayBuilder ::SwitchOnGeneratorState