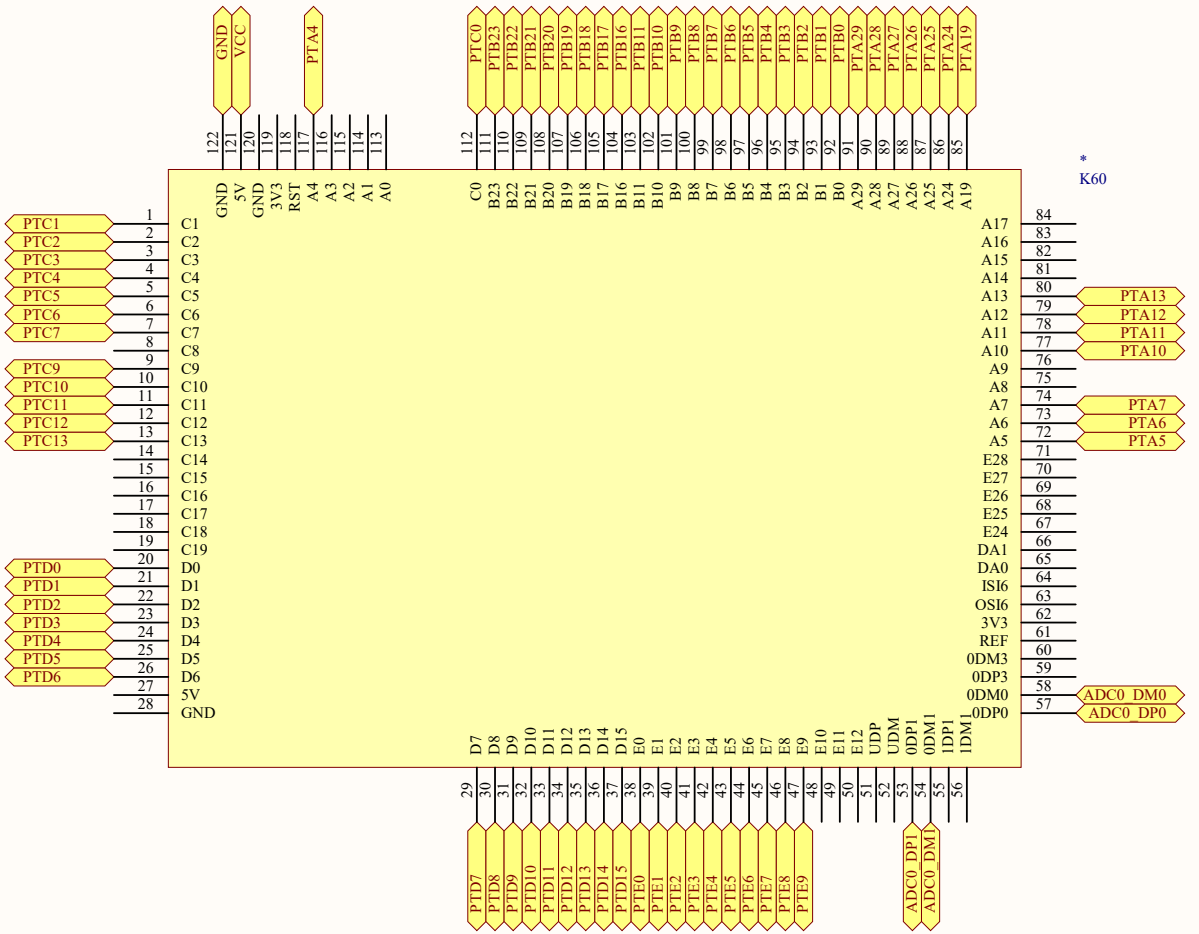

Title		
Size A4	Number	Revision
Date: 2016/1/10		Sheet of
File: C:\Users\...\K60.SchDoc		Drawn By:

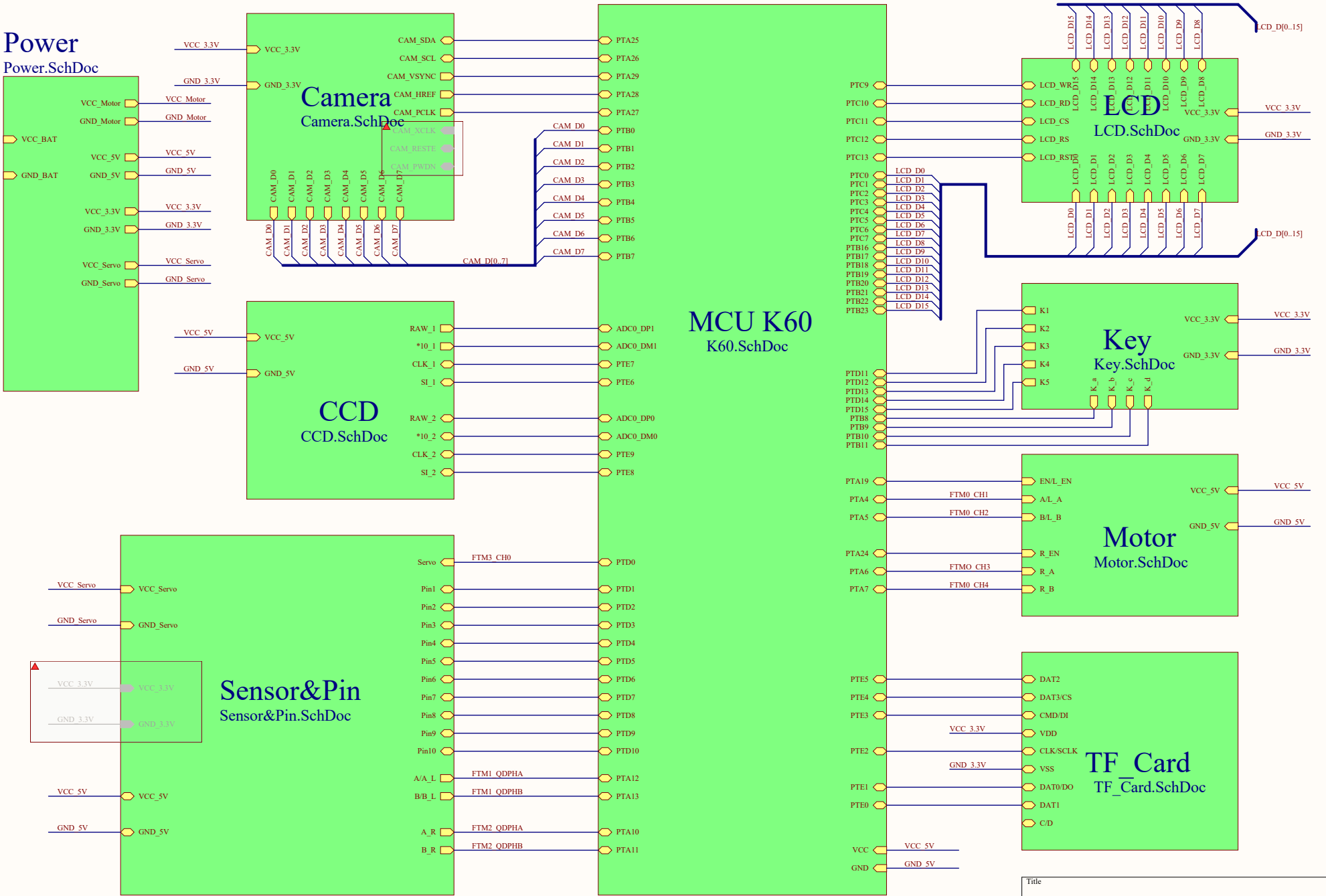
Power
Power.SchDoc
VCC_Motor
GND_Motor
VCC_BAT
VCC_5V
GND_BAT
GND_5V
VCC_3.3V
GND_3.3V
VCC_Servo
GND_Servo
Camera
Camera.SchDoc
CAM_SDA
CAM_SCL
CAM_VSYNC
CAM_HREF
CAM_PCLK
CAM_XCLK
CAM_RESTE
CAM_PWDN
CAM_D0
CAM_D1
CAM_D2
CAM_D3
CAM_D4
CAM_D5
CAM_D6
CAM_D7
CAM_D[0..7]
CCD
CCD.SchDoc
RAW_1
*10_1
CLK_1
SI_1
RAW_2
*10_2
CLK_2
SI_2
Sensor&Pin
Sensor&Pin.SchDoc
Servo
Pin1
Pin2
Pin3
Pin4
Pin5
Pin6
Pin7
Pin8
Pin9
Pin10
A/A_L
B/B_L
A_R
B_R
FTM3_CH0
FTM1_QDPHA
FTM1_QDPHB
FTM2_QDPHA
FTM2_QDPHB
MCU K60
K60.SchDoc
PTA25
PTA26
PTA29
PTA28
PTA27
PTB0
PTB1
PTB2
PTB3
PTB4
PTB5
PTB6
PTB7
ADC0_DP1
ADC0_DM1
PTE7
PTE6
ADC0_DP0
ADC0_DM0
PTE9
PTE8
PTD0
PTD1
PTD2
PTD3
PTD4
PTD5
PTD6
PTD7
PTD8
PTD9
PTD10
PTA12
PTA13
PTA10
PTA11
PTC9
PTC10
PTC11
PTC12
PTC13
PTC0
PTC1
PTC2
PTC3
PTC4
PTC5
PTC6
PTC7
PTB16
PTB17
PTB18
PTB19
PTB20
PTB21
PTB22
PTB23
PTD11
PTD12
PTD13
PTD14
PTD15
PTB8
PTB9
PTB10
PTB11
PTA19
PTA4
PTA5
PTA24
PTA6
PTA7
PTE5
PTE4
PTE3
PTE2
PTE1
PTE0
VCC
GND
LCD
LCD.SchDoc
LCD_WR
LCD_RD
LCD_CS
LCD_RS
LCD_RST
LCD_D0
LCD_D1
LCD_D2
LCD_D3
LCD_D4
LCD_D5
LCD_D6
LCD_D7
LCD_D8
LCD_D9
LCD_D10
LCD_D11
LCD_D12
LCD_D13
LCD_D14
LCD_D15
LCD_D[0..15]
Key
Key.SchDoc
K1
K2
K3
K4
K5
K_a
K_b
K_c
K_d
Motor
Motor.SchDoc
EN/L_EN
A/L_A
B/L_B
R_EN
R_A
R_B
FTM0_CH1
FTM0_CH2
FTMO_CH3
FTM0_CH4
TF_Card
TF_Card.SchDoc
DAT2
DAT3/CS
CMD/DI
VDD
CLK/SCLK
VSS
DAT0/DO
DAT1
C/D
Title
Size
A3
Number
Revision
Date: 2016/1/10
Sheet of
File: C:\Users\..\Main.SchDoc
Drawn By:

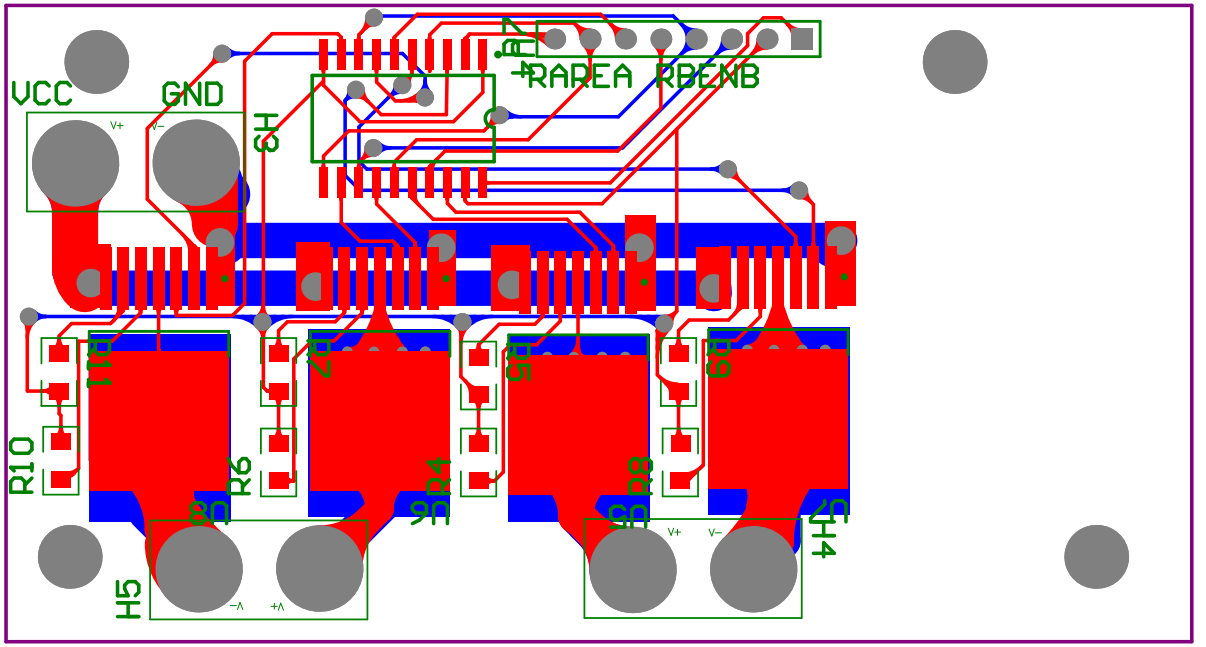
VCC
GND
RAREA
RBENB
H3
R10
R6
H5
H4

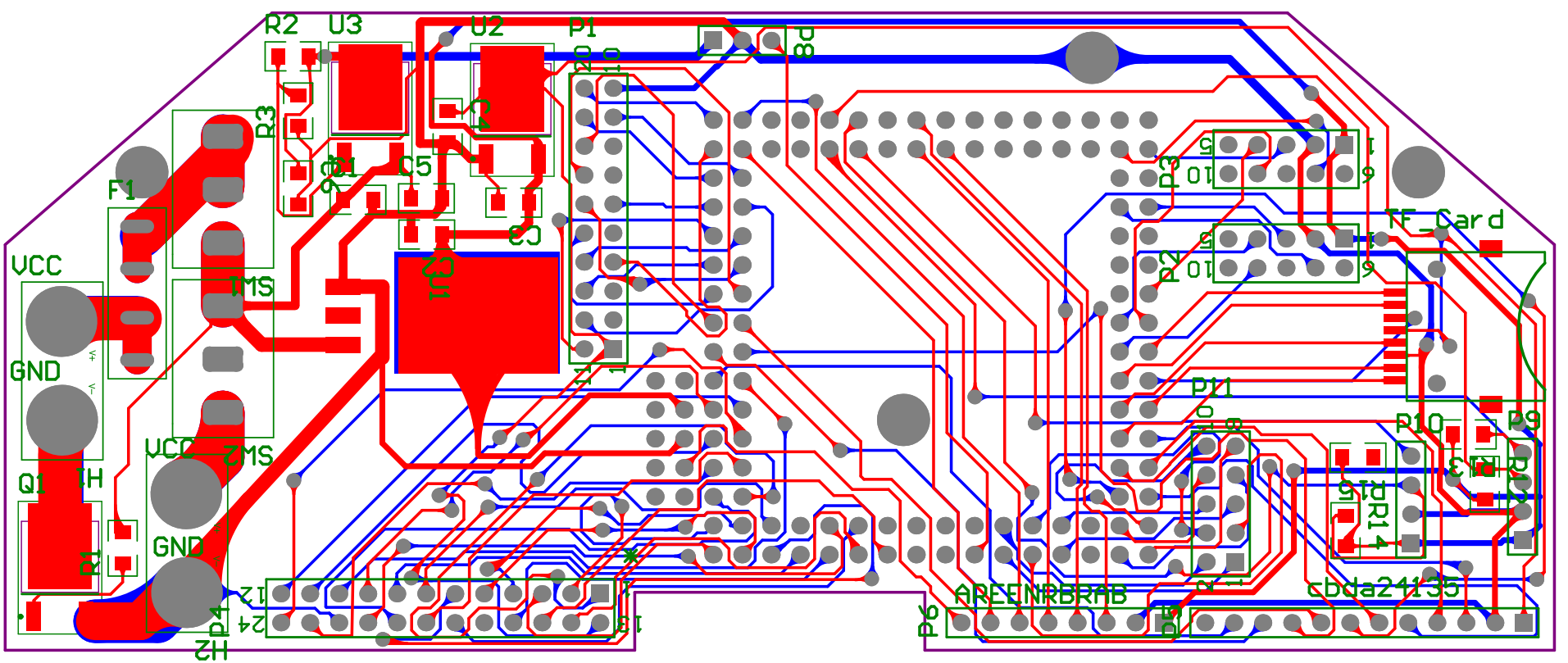
R2
U3
U2
P1
P8
R3
C1
C5
C3
F1
VCC
GND
TMS
TF_Card
P3
P2
P11
P10
P9
Q1
R1
H2
P4
AREENRBRAB
P6
cbda24135

Bill of Materials

<Parameter Title not found>

Source Data From: Freescale2016-0.1.PrjPCB
Project: Freescale2016-0.1.PrjPCB
Variant: None

Creation Date: 2016/1/10 19:07:03
Print Date: 42379 42379.79663

Footprint	Comment	LibRef	Designator	Description	Quantity
K60	K60	K60			1
C普通	10uF	C 普通	C1, C3, C5		3
C普通	22uF	C 普通	C2, C4, C6		3
保险丝 15A	7.5A	保险丝 15A	F1		1
Power	Header_Power_IN	Header_Power_IN	H1, H3		2
Power	Header_Power_OUT	Header_Power_OUT	H2, H4, H5		3
HDR2X10_CEN	Camera	Header 10X2A	P1	Header, 10-Pin, Dual row	1
HDR2X5_CEN	CCD1	Header 5X2A	P2	Header, 5-Pin, Dual row	1
HDR2X5_CEN	CCD2	Header 5X2A	P3	Header, 5-Pin, Dual row	1
HDR2X12_CEN	LCD	Header 12X2A	P4	Header, 12-Pin, Dual row	1
HDR1X12	Key	Header 12	P5	Header, 12-Pin	1
HDR1X8	Motor_OUT	Header 8	P6	Header, 8-Pin	1
HDR1X8	Motor_IN	Header 8	P7	Header, 8-Pin	1
HDR1X3	Servo	Header 3	P8	Header, 3-Pin	1
HDR1X4	Encoder_R	Header 4	P9, P10	Header, 4-Pin	2
HDR2X5	Pin	Header 5X2	P11	Header, 5-Pin, Dual row	1
IRLR7843	IRLR7843	IRLR7843	Q1		1
R 0805	1K	R 0805	R1, R5, R7, R9, R11		5
R 0805	500	R 0805	R2		1
R 0805	2K	R 0805	R3		1
R 0805	51K	R 0805	R4, R6, R8, R10		4
R 0805	10K	R 0805	R12, R13, R14, R15		4
BK1	BK1	BK1	SW1, SW2		2
TF	TF_Card	TF_Card	TF_Card		1
TO-263-3L	AMS1085CD-5.0	AMS1085	U1		1
AMS 1085CD	AMS1085CD-3.3	AMS1085	U2		1
AMS 1085CD	AMS1085CD-ADJ	AMS1085	U3		1
74ALS244	74LS244	74LS244	U4		1
BTN_7971B	BTN_7971	BTN_7971	U5, U6, U7, U8		4
					51

Approved **Notes**