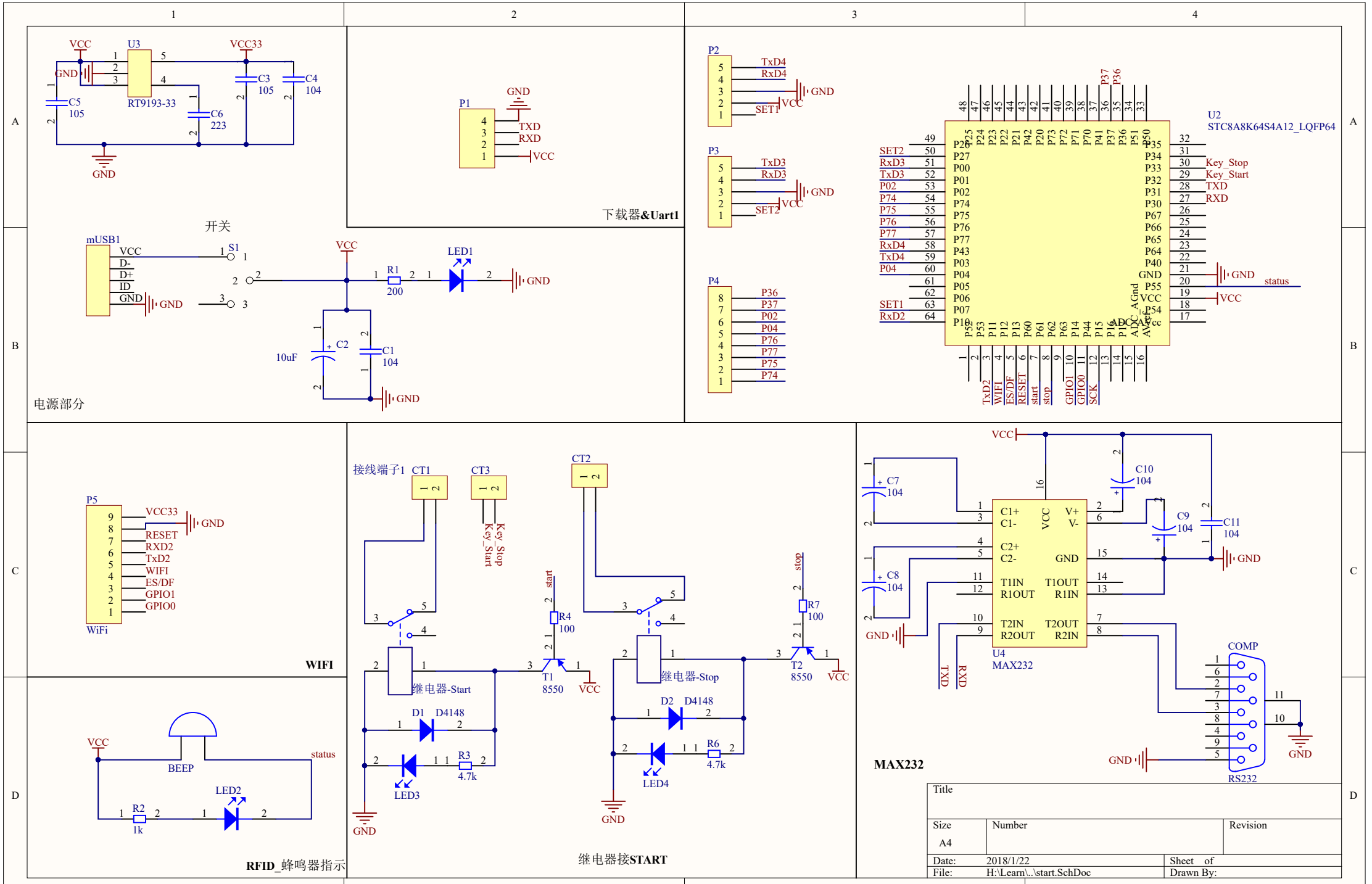
U3
RT9193-33
VCC
VCC33
GND
C5 105
C6 223
C3 105
C4 104
开关
mUSB1
S1
D-
D+
ID
R1 200
LED1
C2 10uF
C1 104
电源部分
P1
TXD
RXD
下载器&Uart1
P2
TxD4
RxD4
SET1
P3
TxD3
RxD3
SET2
P4
P36
P37
P02
P04
P76
P77
P75
P74
U2
STC8A8K64S4A12_LQFP64
Key_Stop
Key_Start
status
P5
VCC33
RESET
RXD2
TxD2
WIFI
ES/DF
GPIO1
GPIO0
WiFi
WIFI
接线端子1
CT1
CT3
CT2
继电器-Start
继电器-Stop
R4 100
R7 100
T1 8550
T2 8550
D1 D4148
D2 D4148
R3 4.7k
R6 4.7k
LED3
LED4
start
stop
继电器接START
C7 104
C8 104
C10 104
C9 104
C11 104
U4 MAX232
COMP
RS232
TXD
RXD
MAX232
BEEP
LED2
R2 1k
RFID_蜂鸣器指示
Title
Size A4
Number
Revision
Date: 2018/1/22
Sheet of
File: H:\Learn\..\start.SchDoc
Drawn By:

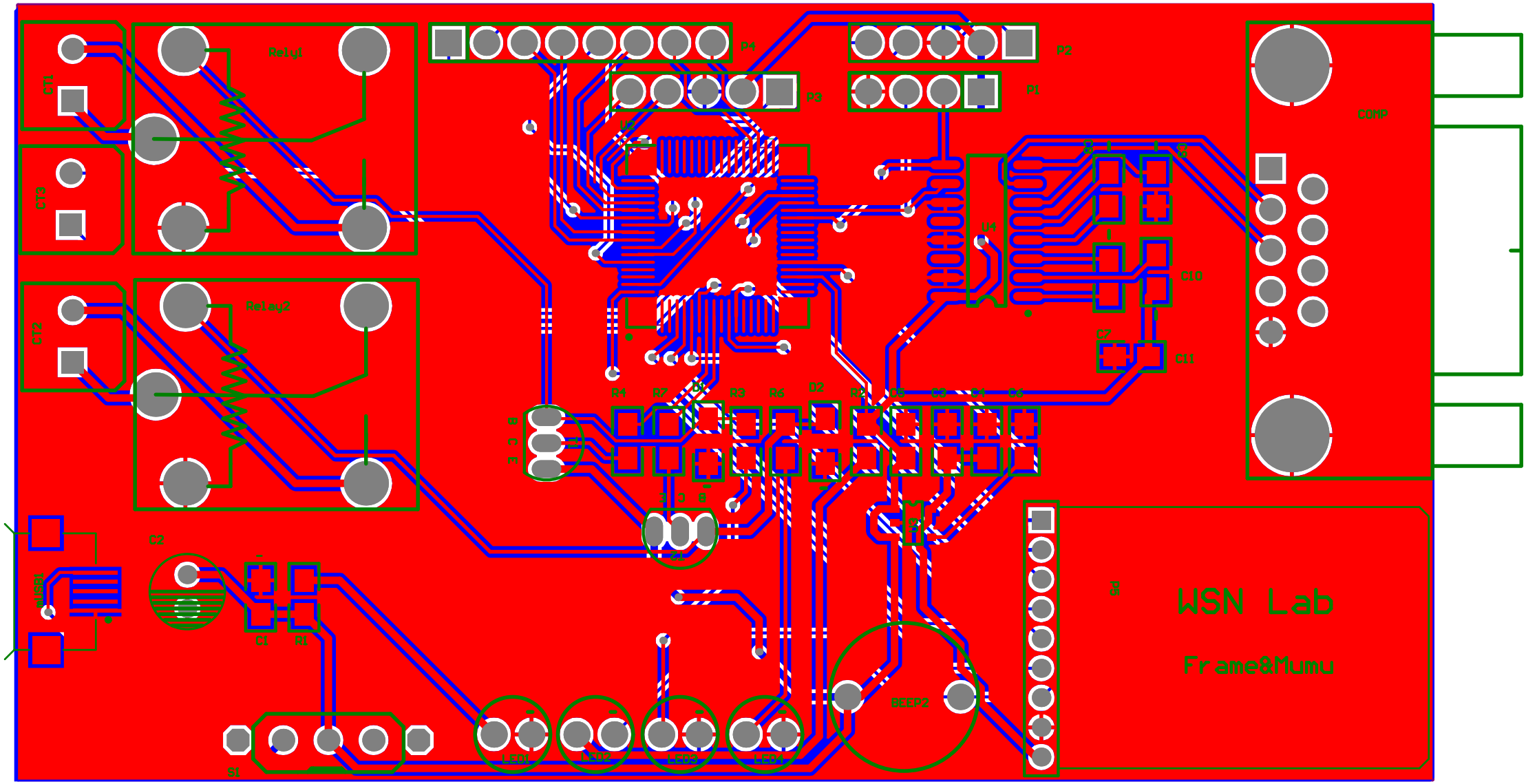
CT1
CT3
CT2
Relay1
Relay2
P4
P3
P2
P1
U2
U4
COMP
C10
C7
C11
R4
R7
R3
R6
R2
C2
C1
R1
S1
LED1
LED2
LED3
LED4
BEEP2
WSN Lab
Frame&Mumu