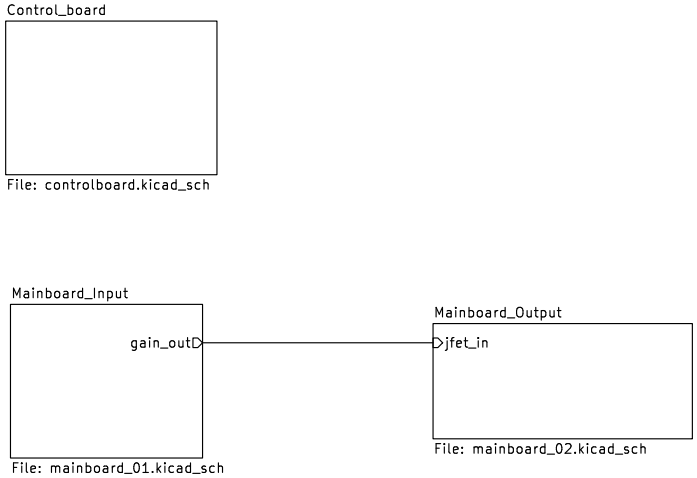

Analog Signal Conditioning Apparatus
CERN-OHL-S v2
Wells Directive

Sheet: /
File: IroFet.kicad_sch

Title: IROFET

Size: A4	Date: 2026-05-16	**Rev: rev.03**
KiCad E.D.A. 9.0.7		Id: 1/4

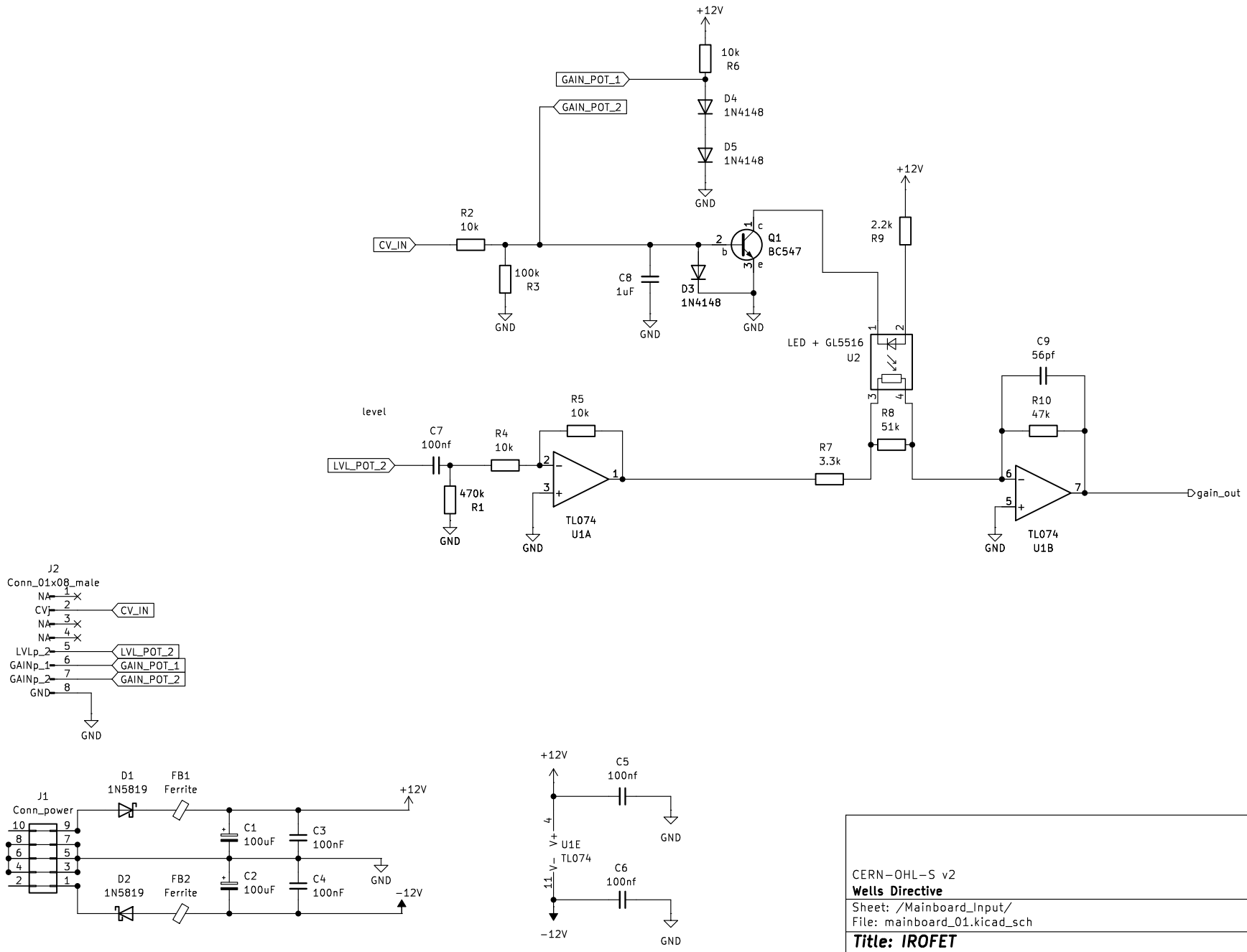

CERN-OHL-S v2

Wells Directive

Sheet: /Mainboard_Input/

File: mainboard_01.kicad_sch

Title: IROFET

Size: A4	Date: 2026-05-16	**Rev: rev.03**
KiCad E.D.A. 9.0.7		Id: 2/4

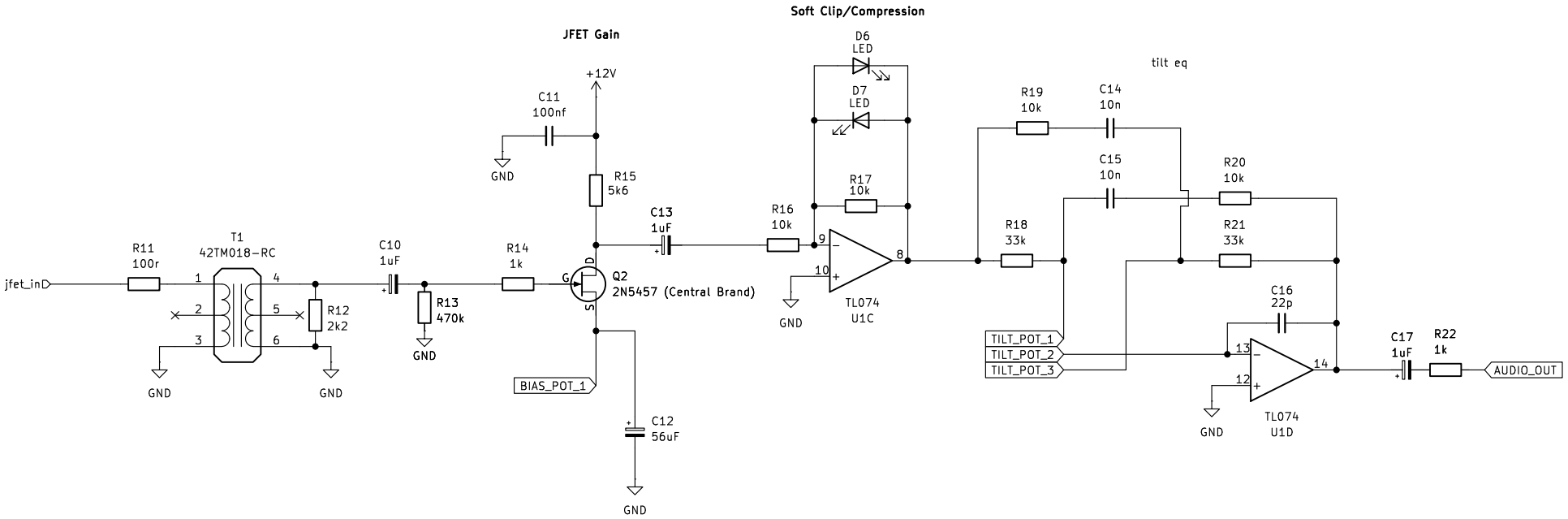

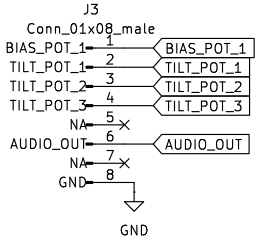

CERN-OHL-S v2
Wells Directive

Sheet: /Mainboard_Output/
File: mainboard_02.kicad_sch

Title: IROFET

Size: A4	Date: 2026-05-16	**Rev: rev.03**
KiCad E.D.A. 9.0.7		Id: 3/4

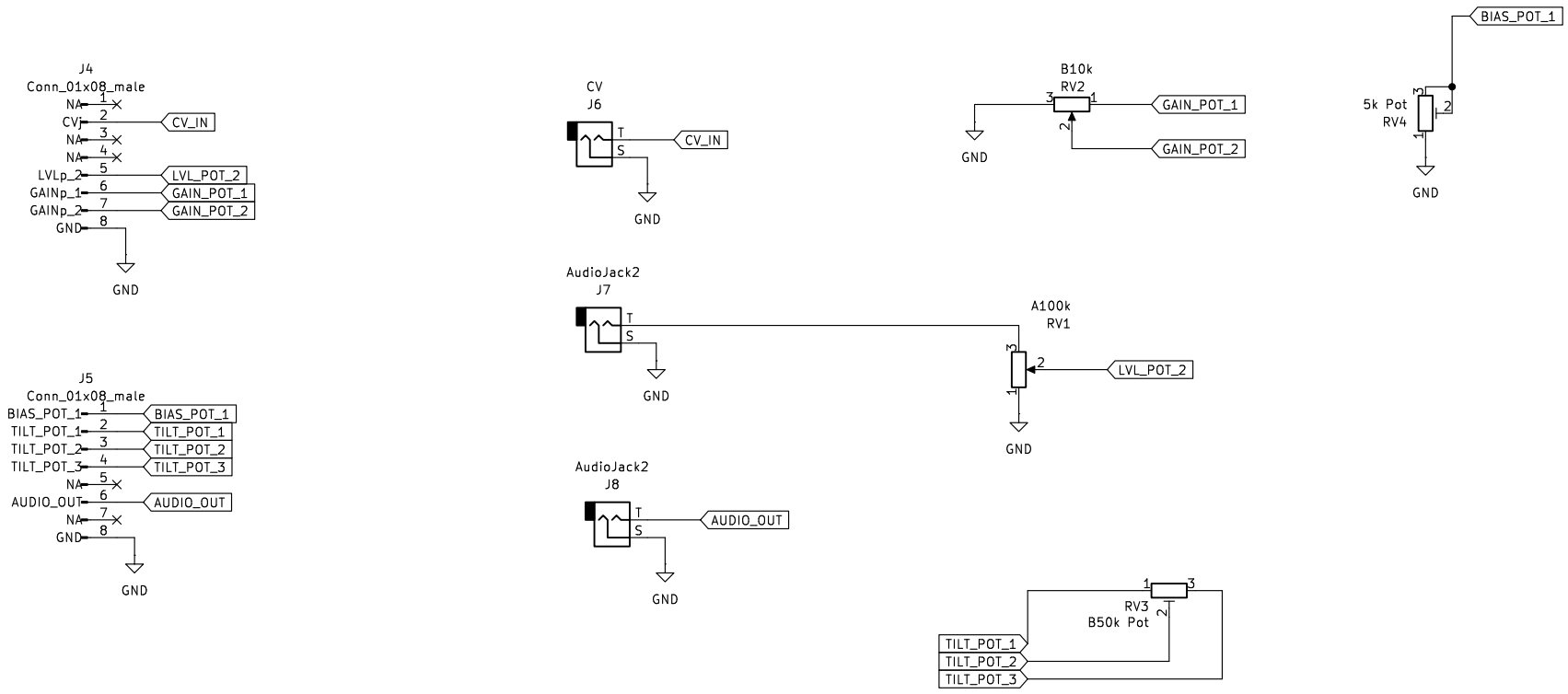

CERN-OHL-S v2
Wells Directive

Sheet: /Control_board/
File: controlboard.kicad_sch

Title: IROFET

Size: A4	Date: 2026-05-16	**Rev: rev.03**
KiCad E.D.A. 9.0.7		Id: 4/4