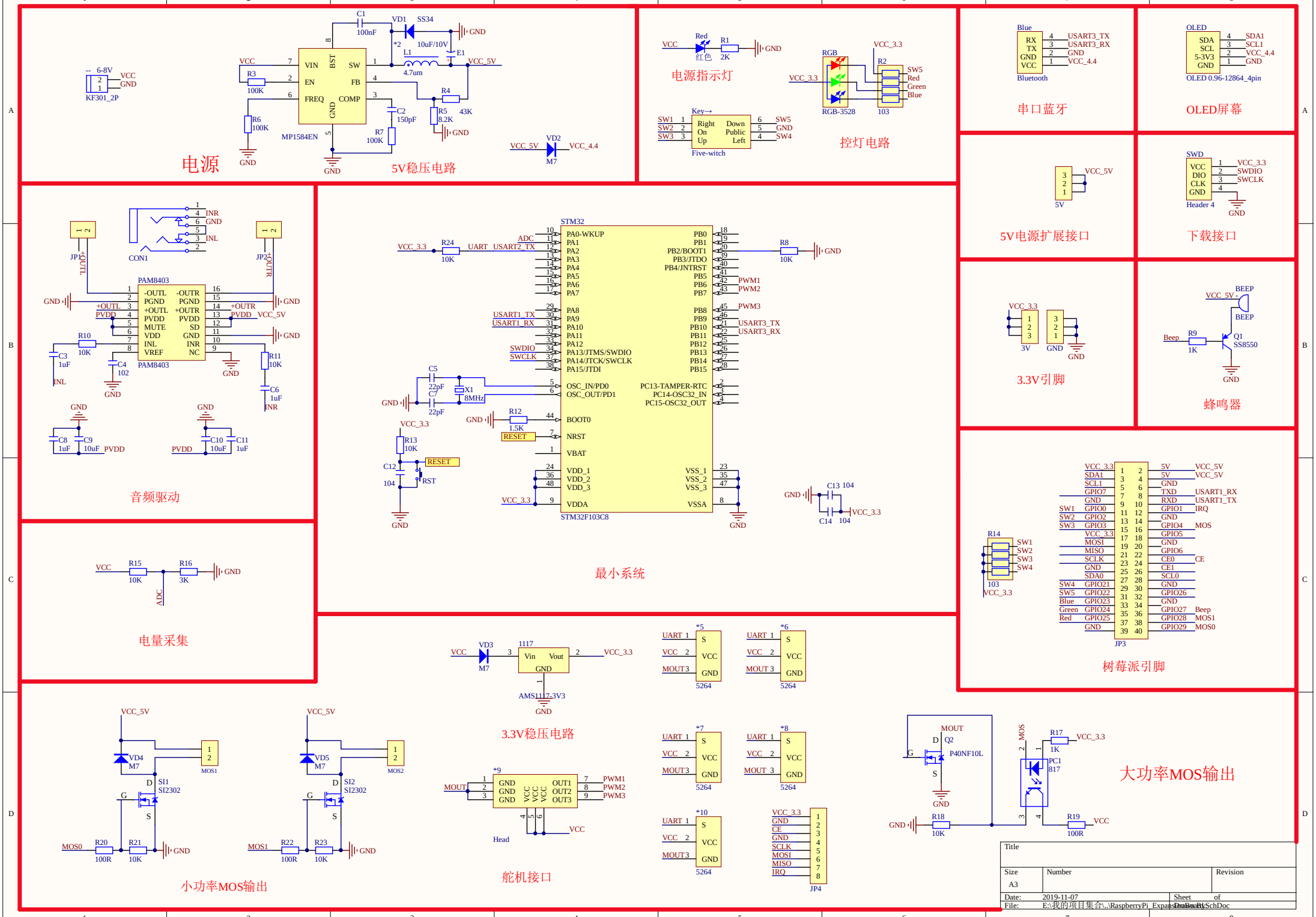
电源
KF301_2P
6-8V
VCC
GND
MP1584EN
VIN
EN
FREQ
BST
SW
FB
COMP
GND
C1 100nF
VD1 SS34
10uF/10V
L1 4.7um
E1
VCC_5V
R3 100K
R6 100K
R4 43K
R5 8.2K
C2 150pF
R7 100K
5V稳压电路
VD2 M7
VCC_4.4
电源指示灯
Red 红色
R1 2K
Key→
Right Down
On Public
Up Left
Five-witch
SW1 SW2 SW3
SW5 GND SW4
RGB
RGB-3528
R2 103
SW5 Red Green Blue
控灯电路
Blue
RX TX GND VCC
USART3_TX USART3_RX GND VCC_4.4
Bluetooth
串口蓝牙
OLED
SDA SCL 5-3V3 GND
SDA1 SCL1 VCC_4.4 GND
OLED 0.96-12864_4pin
OLED屏幕
VCC_5V
5V电源扩展接口
SWD
VCC DIO CLK GND
VCC_3.3 SWDIO SWCLK
Header 4
下载接口
3.3V引脚
BEEP
Beep R9 1K
Q1 SS8550
蜂鸣器
CON1
JP1 JP2
INR GND INL
PAM8403
-OUTL -OUTR PGND +OUTL +OUTR PVDD MUTE VDD INL VREF SD GND INR NC
R10 10K
R11 10K
C3 1uF
C4 102
C6 1uF
C8 1uF
C9 10uF
C10 10uF
C11 1uF
音频驱动
STM32
STM32F103C8
PA0-WKUP PA1 PA2 PA3 PA4 PA5 PA6 PA7 PA8 PA9 PA10 PA11 PA12 PA13/JTMS/SWDIO PA14/JTCK/SWCLK PA15/JTDI
PB0 PB1 PB2/BOOT1 PB3/JTDO PB4/JNTRST PB5 PB6 PB7 PB8 PB9 PB10 PB11 PB12 PB13 PB14 PB15
OSC_IN/PD0 OSC_OUT/PD1
PC13-TAMPER-RTC PC14-OSC32_IN PC15-OSC32_OUT
BOOT0 NRST VBAT VDD_1 VDD_2 VDD_3 VDDA
VSS_1 VSS_2 VSS_3 VSSA
ADC USART2_TX USART1_TX USART1_RX SWDIO SWCLK
PWM1 PWM2 PWM3 USART3_TX USART3_RX
R24 10K
R8 10K
C5 22pF
C7 22pF
X1 8MHz
R12 1.5K
RESET
R13 10K
C12 104
RST
C13 104
C14 104
最小系统
R14
SW1 SW2 SW3 SW4
JP3
VCC_3.3 SDA1 SCL1 GPIO7 GND SW1 GPIO0 SW2 GPIO2 SW3 GPIO3 VCC_3.3 MOSI MISO SCLK GND SDA0 SW4 GPIO21 SW5 GPIO22 Blue GPIO23 Green GPIO24 Red GPIO25 GND
5V 5V GND TXD RXD GPIO1 GND GPIO4 GPIO5 GND GPIO6 CE0 CE1 SCL0 GND GPIO26 GND GPIO27 GPIO28 GPIO29
VCC_5V VCC_5V GND USART1_RX USART1_TX IRQ MOS Beep MOS1 MOS0
树莓派引脚
VCC R15 10K R16 3K GND
ADC
电量采集
VD3 M7
1117 Vin Vout GND
AMS1117-3V3
3.3V稳压电路
*5 *6 *7 *8 *10
UART 1 VCC 2 MOUT3
S VCC GND
5264
*9
MOUT GND GND GND OUT1 OUT2 OUT3
PWM1 PWM2 PWM3
Head
舵机接口
VD4 M7 MOS1
VD5 M7 MOS2
D SI1 SI2 G S SI2302
MOS0 MOS1 R20 100R R21 10K R22 100R R23 10K
小功率MOS输出
MOUT Q2 P40NF10L
R18 10K
R17 1K
PC1 817
R19 100R
大功率MOS输出
VCC_3.3 GND CE GND SCLK MOSI MISO IRQ
JP4
Title
Size A3
Number
Revision
Date: 2019-11-07
Sheet of
File: E:\我的项目集合\..\RaspberryPi_Expansion.SchDoc
Drawn By:

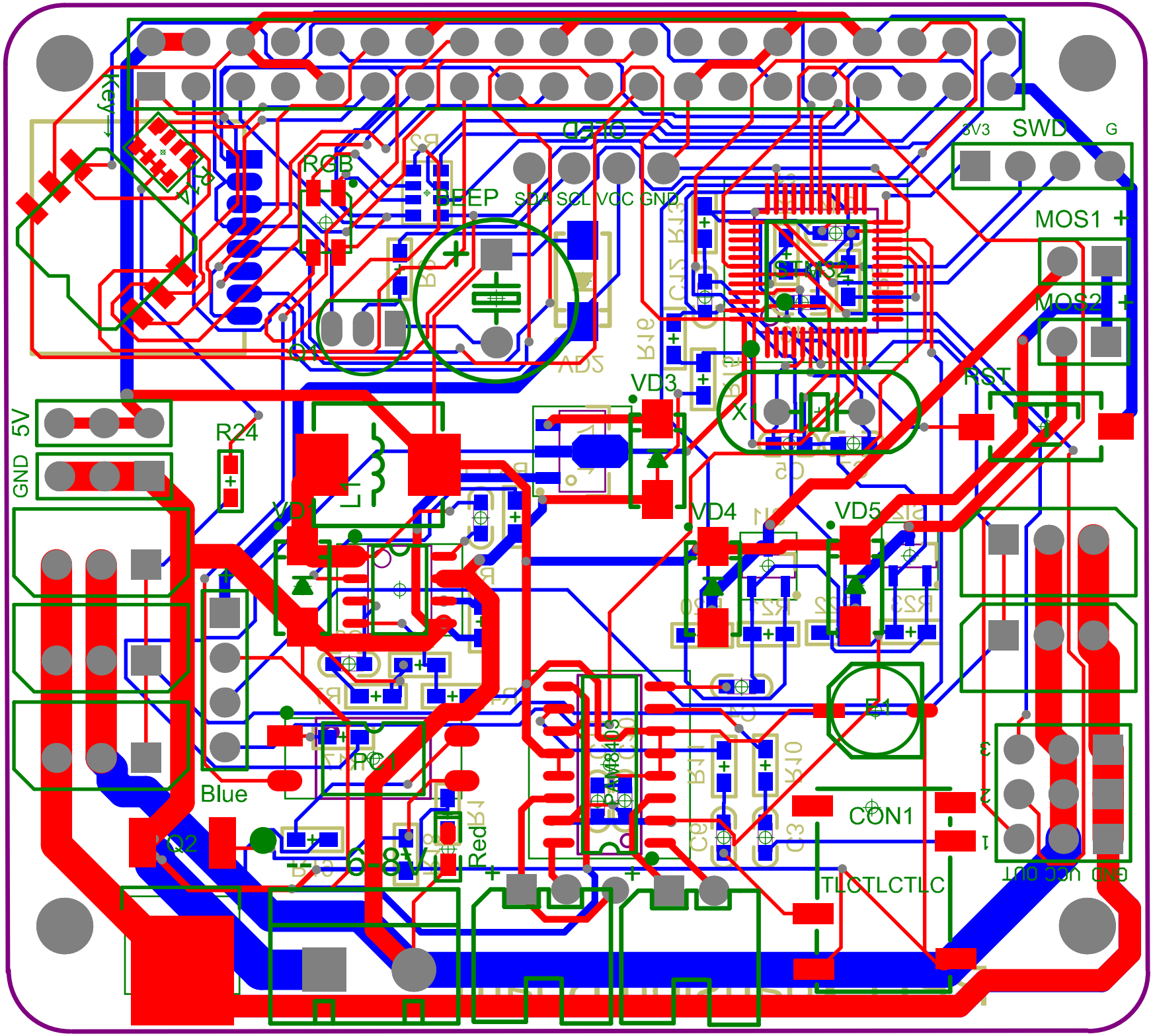
OLED
SDA SCL VCC GND
RGB
BEEP
SWD
3V3
G
MOS1
MOS2
RST
Key
Q1
VD3
X1
R24
5V
GND
VD1
VD4
VD5
F1
PC1
Blue
Red
6-8V
CON1
TLCTLCTLC
GND VCC OUT