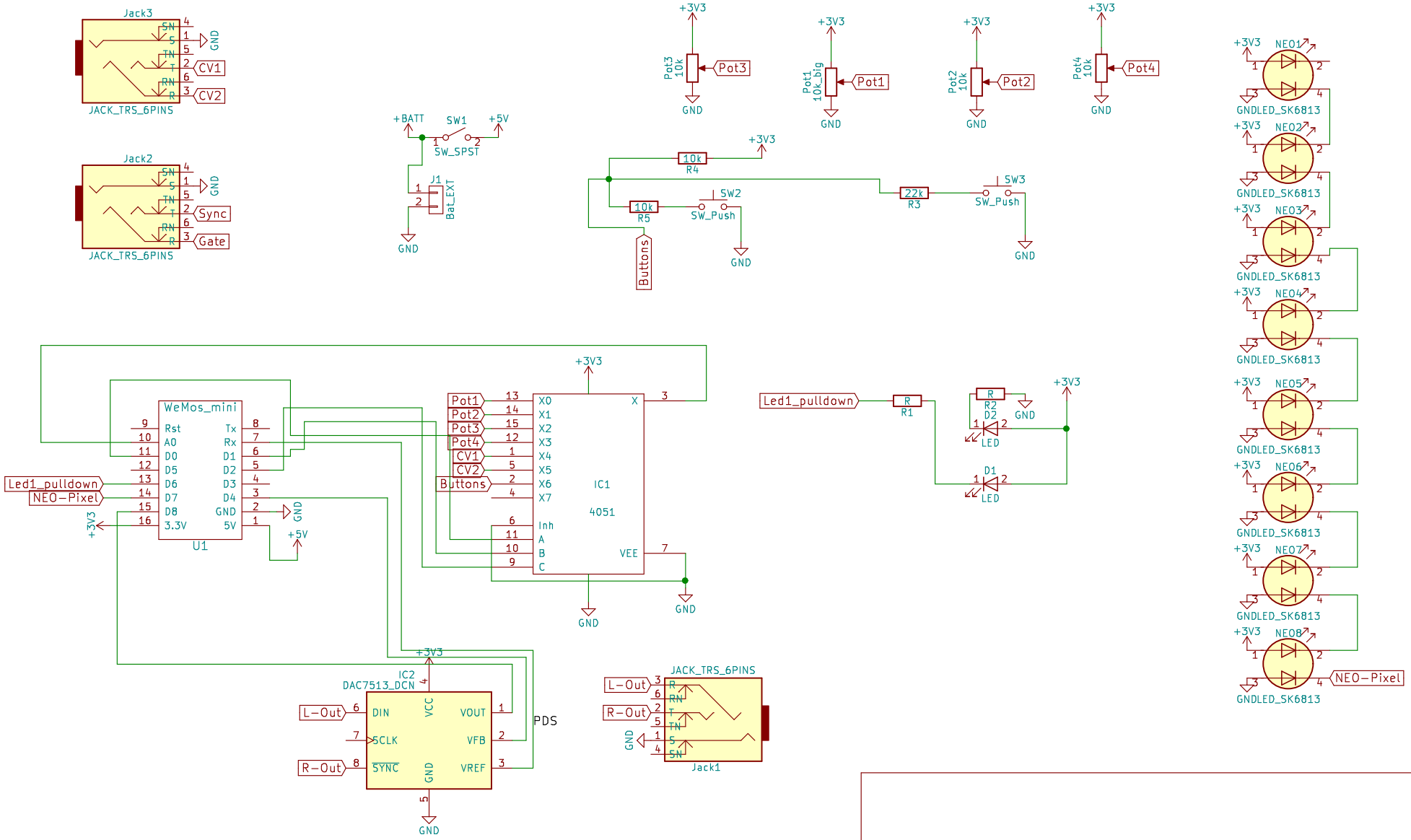

Sheet: /
File: ESPTINY86_Mixtape.sch

Title:

Size: A4	Date:	Rev:
KiCad E.D.A. eeschema 4.0.7-e0-637258ubuntu16.04.1		Id: 1/1