Stellenbosch
UNIVERSITY
IYUNIVESITHI
UNIVERSITEIT

FACULTY OF ENGINEERING/ FAKULTEIT INGENIEURSWESE

Module Code: 46167-344

QUALITY ASSURANCE 344 GEHALTEVERSEKERING

ASSESSMENT A3/ ASSESSERING A3 (CLOSED BOOK/ TOEBOEK)

DATE/ DATUM	November 2023
DURATION/ TYDSDUUR	3 HOURS/URE
TOTAL OF MARKS/ PUNTE TOTAAL	104

Certification/ Sertifisering

	TITLE, NAME AND SURNAME/ TITEL, NAAM EN VAN	SIGNATURES CONFIRM: Question paper and marking scheme are correct and aligned with module outcomes. HANDTEKENINGE BEVESTIG: Vraestel en merk-skema is korrek en belyn met module uitkomste.
EXAMINER/ EKSAMINATOR:	Dr Theuns Dirkse-van Schalkwyk	
INTERNAL EXAMINER/ INTERNE EKSAMINATOR	Dr Wyhan Jooste	JKJooste
EXTERNAL MODERATOR/ EKSTERNE MODERATOR:	Andries Steenkamp	

Student number/ Studente nommer:	23569662
Signature/ Handtekening:	
Declaration By placing my signature in the space provided, I confirm [1] that I have read, understand, and will abide by the assessment rules and instructions set out on the question paper and assessment answer book [2] that I am aware that a contravention of an assessment rule or instruction may cause an assessment to be declared null and void and may even lead to expulsion. [3] that the particulars furnished by me on this front cover are true and correct.	**Verklaring** Deur my handtekening in die onderstaande ruimte/s te plaas, bevestig ek [1] dat ek die assesseringsreëls en voorskrifte op die vraestel van die antwoordboek gelees het, verstaan en sal gehoorsaam; [2] dat ek bewus is 'n oortreding van 'n assesseringsreël of voorskrif daartoe kan lei dat 'n assessering ongeldig verklaar word, en selfs tot skorsing kan lei; [3] dat die besonderhede wat ek op hierdie blad verstrek het, waar en korrek is.

Q1-10	Q2-10	Q3-18	Q4-28	Q5-12	Q6-16	Q7-10						Total-104	Signature
10	6	16	18	9	11	9						81	

Copyright @ 2023 Stellenbosch University. All rights reserved

Stellenbosch
UNIVERSITY
IYUNIVESITHI
UNIVERSITEIT

Instructions/ Instruksies

1. Make sure your student number and signature are on the front of your answer book(s), before you hand in.	1. Voordat u inhandig, maak seker dat u studentenommer en handtekening op u antwoordboek(e) aangebring is.
2. The Engineering Faculty's General Stipulations for under- and postgraduate modules" apply to this assessment.	2. Fakulteit Ingenieurswese se "Algemene bepalings vir voor- en nagraadse modules" is op hierdie assessering van toepassing.
3. The question paper consists of 7 questions. Make sure that you have received 24 printed pages.	3. Die vraestel bestaan uit 7 vrae. Maak seker dat u 24 gedrukte bladsye ontvang het.
4. This is a closed book assessment. No information sources may be consulted.	4. Hierdie is 'n toeboek assessering. Geen inligting bronne mag geraadpleeg word nie.
5. Pocket calculators prescribed for the first two years of the BEng may be used.	5. Sakrekenaars voorgeskryf vir die eerste twee jaar van die Bing mag gebruik word.
6. A formula sheet is provided.	6. 'n Formule blad word verskaf.
7. Answer all the questions in the spaces provided on this question paper.	7. Beantwoord al die vrae in die ruimtes voorsien op hierdie vraestel.
8. If, in your opinion, there are any missing or incorrect parameters, make reasonable assumptions, state them clearly and continue.	8. As daar na jou mening enige parameters ontbreek of verkeerd is, maak redelike aannames, stel jou aannames duidelik en gaan voort.
9. The marks for each question are indicated to the right of the question in brackets.	9. Die punte vir elke vraag word regs van die vraag in hakies aangedui.
10. ALL the pages of the question paper must be handed in.	10. AL die bladsye van die vraestel moet ingehandig word.
11. No use of electronic media in the venue.	11. Geen elektroniese media mag in die lokaal gebruik word nie.
12. Questions 5, 6 and 7 proves ECSA GA4 partially.	12. Vrae 5, 6 en 7 bewys ECSA GA4 gedeeltelik.

Copyright @ 2023 Stellenbosch University. All rights reserved

QUESTION 1/ VRAAG 1 [10]

Sample	Sample Mean	Sample Standard Deviation
1	3100	217.95
2	3098	211.35
3	3101	217.19
4	2103	316.16
5	3101	218.71
6	3105	115.84
7	2094	110.89
8	3102	110.44
9	3103	38.93
10	3096	113.98

The time taken for cars to drive through a tunnel is stored in a database. The time taken to drive through is measured in s and used to monitor the stability of the process. Historical data for duration (in s) of ten samples are presented below. A sample size of twenty was used. Choose which SPC charts to use and motivate your choice. [3]

Die tyd wat dit neem vir karre om deur 'n tonnel te ry word gestoor in 'n databasis. Die tyd wat dit neem om deur te ry word in s gemeet en gebruik om die stabiliteit van die proses te monitor. Historiese data vir tydsverloop (in s) van tien steekproewe word hierbo gewys. 'n Steekproef- grootte van twintig was gebruik. Kies watter SPC beheerkaarte om te gebruik en motiveer jou keuse. [3]

x-chart : measures central tendency

s-chart : measures variability

Calculate the appropriate Upper and Lower control limits to monitor the drive time for future data with sample-size of 16. [7]

Bereken die toepaslike Boonste en Onderste beheer limiete om die ry tyd te monitor vir toekomstige data met steekproef-groote van 16. [7]

x - chart : $\bar{\bar{x}} = 2900,3$

$\bar{s} = 167,144$

Sample size of 16 : $A3 = 0,763$

$\therefore CL = 2900,3$

$LCL = 2900,3 - 0,763(167,144)$

Copyright @ 2023 Stellenbosch University. All rights reserved

$= 2772,769$

$\therefore UCL = 2900,3 + 0,763(167,144)$

$= 3027,831$

S-Chart: $\bar{S} = 167,144$

$B3 = 0,448$

$B4 = 1,552$

$\therefore CL = 167,144$

$LCL = (0,448)(167,144)$

$= 74,881$

$UCL = (1,552)(167,144)$

$= 259,407$

Copyright @ 2023 Stellenbosch University. All rights reserved

QUESTION 2/ VRAAG 2 [10]

In the production of a beer, the proportion of carbs in each bottle has a specification of 8g ± 2g per 100g. An initial random sample of 1000 bottles revealed a sample average carb content of 7.5 g/100g and a sample standard deviation of 1.2 g. Management then uses x- and R-charts to monitor the carb amount using samples each of size 4. The charts depict an in control process. The centre line of the R-chart is 3g and the centre line of the x- chart is 7.5g. Compute C_p for this process using estimates of the process mean and standard deviation derived from the random sample. [2]	By die vervaardiging van 'n bier het die proporsie koolhidrate in elke bottel 'n spesifikasie van 8g ± 2g per 100g. 'n Aanvanklike ewekansige steekproef van 1000 bottels het 'n gemiddelde koolhidraatinhoud van 7,5 g/100 g en 'n steekproef standaardafwyking van 1,2 g getoon. Bestuur gebruik dan x- en R-kaarte om die koolhidraat hoeveelheid te monitor deur monsters elk van grootte 4 te gebruik. Die kaarte beeld 'n in beheer proses uit. Die middellyn van die R-grafiek is 3g en die middellyn van die x-grafiek is 7.5g. Bereken C_p vir hierdie proses deur ramings van die prosesgemiddelde en standaardafwyking wat van die ewekansige steekproef afgelei is, te gebruik. [2]

$USL = 8 + 2 = 10$

$LSL = 8 - 2 = 6$

$\sigma = 1,2$

$\therefore C_p = \frac{(10-6)}{6(1,2)} = 0,5556$

Compute C_p for this process using estimates of the process mean and standard deviation derived from the control chart parameters. [4]	Bereken C_p vir hierdie proses deur gebruik te maak van ramings van die proses gemiddelde en standaard afwyking afgelei van die beheer kaart parameters. [4]

$\bar{R} = 3$, $\bar{x} = 7,5$, $d_2 = 2,059$

$LCL: 7,5 - 3\left(\frac{3}{2,059}\right) = 3,1289$

$UCL: 7,5 + 3\left(\frac{3}{2,059}\right) = 11,871$

$\sigma = \frac{\bar{R}}{d_2} = \frac{3}{2,059} = 1,457$

$C_p = (11,871 - 3,1289)/6(1,457)$

$= 1,00$

Copyright @ 2023 Stellenbosch University. All rights reserved

Space-Y recorded their total failures in 1000 satellite launches and found that they had 13 failed modules. The historic rate of satellite module failures is 42 per 10,000 modules. If the average number of modules per satellite is assumed to be 87, how many errors per million opportunities (epmo) does the historic rate represent? [2]	Space-Y het hul totale mislukkings in 1000 satellietlanserings aangeteken en gevind dat hulle 13 mislukte modules gehad het. Die historiese koers van mislukkings van satellietmodules is 42 per 10 000 modules. As die gemiddelde aantal modules per satelliet as 87 aanvaar word, hoeveel foute per miljoen geleenthede (epmo) verteenwoordig die historiese koers? [2]

$\frac{42 \text{ Failures}}{10\,000 \text{ modules}} \times \frac{87 \text{ modules}}{\text{satellite}} = 0{,}3654 \frac{\text{Failures}}{\text{satellite}}$

$\therefore \frac{0{,}3654 \text{ Failures}}{\text{satellite}} \times 1000\,000 = 365\,400$ errors / million

Calculate epmo for Space-Y. How does the historic average compare with the rate for Space-Y? Is Space-Y better than average? [2]	Bereken epmo vir Space-Y. Hoe vergelyk die historiese gemiddelde met die koers vir Space-Y. Is Space-Y beter as gemiddeld? [2]

$\frac{13 \text{ failed modules}}{1000 \text{ satellites}} \times 1000\,000 = 13\,000$ modules / satellite

$\therefore 0{,}0001494 \times 1000\,000$

$= 149{,}43$ errors/million

Space Y has less errors. and is better than the average.

Copyright @ 2023 Stellenbosch University. All rights reserved

QUESTION 3/ VRAAG 3 [18]

A refrigeration process on a space station has a set of pipes that must be fixed to have no leaks. There are six pipes available in storage to fix the system, and every pipe can be used in any of the six places as shown on the picture. The six positions in the system are named Outside, Top1, Top2, Top3, Top4 and Bottom. Due to previous use, the reliability of the six replacement pipes to keep working until the station can get new pipes are respectively 0.98, 0.97, 0.96, 0.95, 0.94 and 0.9. The five mechanisms seen on the system are valves that may be open or closed and the system can function correctly while any of the three pipes linking the left to the right work.

'n Verkoelingsproses op 'n ruimtestasie het 'n stel pype wat reggemaak moet word sodat daar geen lekke is nie. Daar is ses pype beskikbaar in die stoor om die stelsel reg te maak, wat elkeen pas in enige van die ses plekke soos gewys op die skets. Die ses posisies in die stelsel word genoem Buite, Bo1, Bo2, Bo3, Bo4 en Onder. Weens vorige gebruik is die ses pype se betroubaarheid om aan te hou werk tot die stasie nuwe pype kan kry, onderskeidelik 0.98, 0.97, 0.96, 0.95, 0.94 and 0.9. Die vyf meganismes op die stelsel is kleppe wat oop of toe kan wees, en die stelsel sal reg funksioneer indien enige van die drie pype van links na regs werk.

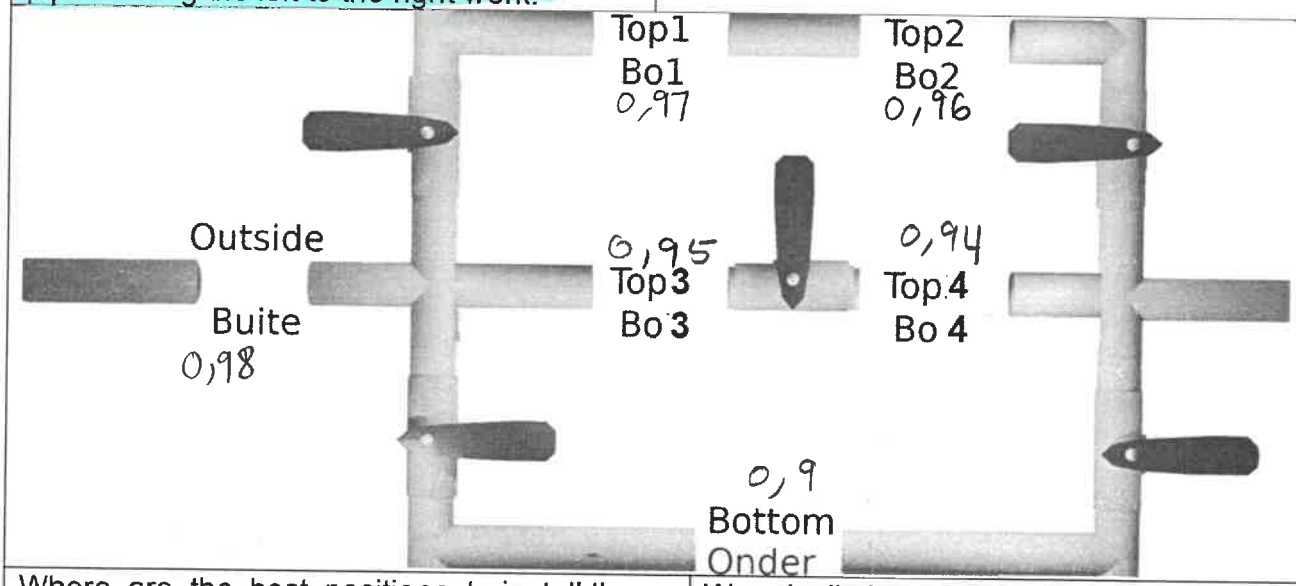

Where are the best positions to install the pipes for a most reliable repair? What is the reliability of the system if these positions are used? [8]

Waar is die best posisies om die pype te instaleer vir 'n betroubare herstel? Wat is die betroubaarheid in die stelsel indien die posisies gebruik word? [8]

$R_{top1,\,top2} = (0,97)(0,96) = 0,9312$

$R_{top3,\,top4} = (0,95)(0,94) = 0,893$

* Outside pipe will always be used

$R_{top\,1,2;\,outside} = (0,9312)(0,98) = 0,912576$

Copyright @ 2023 Stellenbosch University. All rights reserved

∴ The best positions are outside, at top 1 and 2 and at the bottom, with 97,33 % reliability.

$R_{top\,3,4\,;\,outside} = (0,893)(0,98) = 0,87514$

$R_{bottom,\,outside} = (0,98)(0,9) = 0,882$

$R_{top\,1,2\,;\,bottom,\,outside} = [1-(1-0,9312)(1-0,9)](0,9) = 0,9733$

$R_{top\,1,2,\,top\,3,4,\,outside} = [1-(1-0,9312)(1-0,893)](0,9) = 0,8934$

$R_{top\,3,4\,;\,bottom,\,outside} = [1-(1-0,893)(1-0,9)](0,9) = 0,89037$

Why are there multiple options that all give the best solution? [2]	Hoekom is daar meervuldige opsies wat almal die beste oplossing lewer? [2]

The position of the valves and configuration of Top 3 and Top 4.

Where are the worst positions to install the pipes if we strive for the most reliable repair? What is the reliability of the system if these positions are used? [8]	Waar is die swakste posisies om die pype te instaleer indien ons streef na 'n betroubare herstel? Wat is die betroubaarheid in die stelsel indien die posisies gebruik word? [8]

$R_{top\,1,2,\,top\,3,4} = [1-(1-0,9312)(1-0,893)] = 0,9926$

$R_{top\,1,2,3,4\,;\,bottom} = [1-(1-0,9926)(1-0,9)] = 0,99926$

$\therefore R_{all} = (0,9)(0,99926) = 0,899$

$R_{bottom,\,outside} = (0,98)(0,9) = 0,882$

$R_{top\,3,4\,;\,outside} = (0,893)(0,98) = 0,87514$

∴ The worst positions are outside and at Top 3 and 4 due to the valve between 3 and 4. The reliability is 87,51 %.

Copyright @ 2023 Stellenbosch University. All rights reserved

Copyright @ 2023 Stellenbosch University. All rights reserved

QUESTION 4/ VRAAG 4 [28]

A utility requires service operators to answer telephone calls from customers in an average time of 0.12 minute or less. A sample of 25 actual operator times was drawn, and the mean was calculated as 0.1323 with a standard deviation of 0.0283 minutes. In addition, operators are expected to determine customer needs and either respond to them or refer the customer to the proper department within 0.75 minute. Another sample of 25 times was taken for this job component and the mean was calculated as 0.78 with a standard deviation of 0.0902 minutes.

If these variables can be considered to be independent, are the average times taken to perform each component statistically different from the standards? Use α = 0.5 and the student-t distribution [15]

'n Verskaffer vereis dat diensoperateurs telefoonoproepe van kliënte in 'n gemiddelde tyd van 0.12 minute of minder moet antwoord. 'n Steekproef van 25 "werklike tye om te antwoord" is geneem, en die resultate is as volg. Gemiddelide tyd om te antwoord is 0.1323 met standaard afwyking van 0.0283 minute. Daarbenewens word daar van operateurs verwag om te bepaal wat die kliënt se behoeftes is en die kliënt na die regte departement te verwys binne 0.75 minuut. Nog 'n steekproef van 25 is vir hierdie werk komponent geneem en daar is bereken dat die gemiddeld 0.78 met standaardafwyking van 0.0902 minute is. As hierdie veranderlikes as onafhanklik beskou kan word, is die gemiddeldes van elke komponent statisties anders as die standaarde wat vereis word? Gebruik α = 0.5 en die student- t verdeling, [15]

Alpha given as 0,5 :

Sample 1:
$n = 25$
$\bar{x} = 0,1323$
$s = 0,0283$

Sample 2:
$n = 25$
$\bar{x} = 0,78$
$s = 0,0902$

$H_0: \mu_1 = \mu_2$ (The samples are not statistically different)

$\mu_1 = 0,1323 \pm (0,685)\frac{(0,0283)}{\sqrt{25}}$
$= (0,128 ; 0,136)$

$\mu_2 = 0,78 \pm (0,685)\frac{(0,0902)}{\sqrt{25}}$
$= (0,7676 ; 0,7924)$

Copyright @ 2023 Stellenbosch University. All rights reserved

Answer calls : $t = \dfrac{0,1323 - 0,12}{\left(\dfrac{0,0283}{\sqrt{25}}\right)}$

$= 2,173$

Respond to calls : $t = \dfrac{0,78 - 0,75}{\left(\dfrac{0,0902}{\sqrt{25}}\right)}$

$= 1,663$

Answer calls : $t_{crit} = 0,685$

Respond to calls : $t_{crit} = 0,685$

$\therefore t_{calc} > t_{crit}$

$\therefore$ Reject null hypothesis

$\therefore$ Variables are statistically different from the standards

Copyright @ 2023 Stellenbosch University. All rights reserved

The length of a machined part has a nominal specification of 11.9 cm. The process that produces the part can be controlled to have a mean length equal to this specification, but has a normal distribution with a standard deviation of 0.05 cm. What is the probability that a part will have a length

A) exceeding 12 cm? [2]

Die lengte van 'n gemasjineerde part het 'n nominale spesifikasie van 11.9 cm. Die proses wat die part vervaardig se gemiddelde lengte kan beheer word om gelyk te wees aan die spesifikasie, maar is normaal verdeel met 'n standaard afwyking van 0.05 cm. Wat is die waarskynlikheid dat die part se lengte

A) groter as 12 cm sal wees? [2]

$[P(X>12) = 1 - P(X<12)]$

$P(X<12) = Z = \frac{12-11,9}{0,05} = 2$

$\therefore p = 0,9772$

$\therefore P(X>12) = 1 - 0,9772$

$= 0,0228$

B) between 11.9 & 11.95 cm? [4]

B) tussen 11.9 & 11.95 cm sal wees? [4]

$Z_{11,9} = \frac{11,9-11,9}{0,05} = 0$ $\therefore p = 0,5$

$Z_{11,95} = \frac{11,95-11,9}{0,05} = 1$ $\therefore p = 0,8413$

$\therefore P(11,9 < X < 11,95) = 0,8413 - 0,5$

$= 0,3413$

C) less than 11.83 cm? [2]

C) kleiner as 11.83 cm sal wees? [2]

$Z = \frac{11,83-11,9}{0,05} = -1,4$

$\therefore p = 0,9192$

$\therefore P(X<11,83) = 1 - 0,9192$

$= 0,0808$

Copyright @ 2023 Stellenbosch University. All rights reserved

The mean height of trees in a plantation is 19.5 metre. (A) If 5% of the trees are more than 20.75 metre, what is the standard deviation of trees in the plantation? Assume a normal distribution. [5]	Die gemiddelde hoogte van die bome in a plantasie is 19.5 meter. (A) Indien 5% van die bome langer is as 20.75 meter neem, wat is die standaard afwyking van die bome se lengte in die plantasie? Aanvaar 'n normaal verdeling. [5]

$\mu = 19,5$

$P(X > 20,75) = 0,05$

$$z = \frac{20,75 - 19,5}{\sigma}$$

$\therefore P(X > 20,75) = 1 - P(X < 20,75)$

$= 1 - 0,05$

$= 0,95$

① $(0,9495 ; 1,64)$

② $(0,9505 ; 1,65)$

$$\therefore y = 1,64 + (0,95 - 0,9495)\frac{(1,65 - 1,64)}{(0,9505 - 0,9495)}$$

$= 1,645$

$$\therefore 1,645 = \frac{20,75 - 19,5}{\sigma}$$

$1,645\sigma = 1,25$

$\sigma = 0,75988$

Copyright @ 2023 Stellenbosch University. All rights reserved

$F(x) = \frac{x-a}{b-a}$

$F(x) = \frac{1}{b-a}$

Stellenbosch
UNIVERSITY
IYUNIVESITHI
UNIVERSITEIT

Question 5:	**Vraag 5:**
There is a sub-minimum of 50% on questions 5, 6 and 7 due to ECSA GA4. [12]	**Daar is 'n sub-minimum van 50% op vraag 5, 6 en 7 weens ECSA GA4. [12]**
The accepted normal weight of a can at BevCan is found to be a Uniform distribution between 1120 and 1420 gram and 17 cans are received and handled every minute. The manager has a system that measures the individual cans and a rule that flags her when there are n = 2 consecutive cans that weigh less than 1130 grams. She then "rightly or wrongly" assumes that there is something amiss with the machines. When the system contacts her, she takes 16 minutes to motivate the workers to work more accurately. If they were motivated to start with, she has wasted her time. However, if they were unmotivated, they become motivated again at the end of the 16 minutes. Her total cost to the company is R3200/hour. Lack of worker motivation is known to cost the company R27 per minute and would last for 185 minutes if nothing is done to motivate the workers. Lack of worker motivation has a probability of n2/25 − 0.04 = 0.12 being present when the system contacts her, based on the number of consecutive points used in the rule; for example when n=2.	Die aanvaarde normale gewig van 'n blikkie by BevCan blyk 'n Eenvormige verspreiding te wees tussen 1120 en 1420 gram en 17 blikkies word elke minuut ontvang en hanteer. Die bestuurder het 'n stelsel wat die individuele blikkies meet en 'n reël wat haar in kennis stel wanneer daar n = 2 opeenvolgende blikkies is wat minder as 1130 gram weeg. Sy neem dan "reg of verkeerd" aan dat daar iets skort met die masjiene. Wanneer die stelsel haar kontak, neem sy 16 minute om die werkers te motiveer om meer akkuraat te werk. As hulle gemotiveerd was om mee te begin, het sy haar tyd gemors. As hulle egter ongemotiveerd was, raak hulle weer gemotiveerd aan die einde van die 16 minute. Haar totale koste vir die maatskappy is R3200/uur. Gebrek aan werkersmotivering kos die maatskappy R27 per minuut en sal 185 minute duur as niks gedoen word om die werkers te motiveer nie. Gebrek aan werker motivering het 'n waarskynlikheid van n2/25 − 0.04 = 0.12 teenwoordig wanneer die stelsel haar kontak, gebaseer op die aantal opeenvolgende punte wat in die reël gebruik word; byvoorbeeld wanneer n=2.
A) Calculate the type I error for this rule when n= 2? [2]	A) Bereken die tipe I fout vir die reël met n = 2? [2]

2

$F(x) = \frac{x-a}{b-a}$

$= \frac{x-1120}{1420-1120}$

$= \frac{x-1120}{300}$

Type 1 error: Process is in control but we say it isn't

$\therefore \frac{1130-1120}{300} = \frac{1}{30}$

$\therefore \left(\frac{1}{30}\right)^2$

$= \frac{1}{900} = 0{,}001111$

Copyright @ 2023 Stellenbosch University. All rights reserved

B) If for the past 150 hours it was impossible to make a type II error, what was the expected time she lost due to type I errors? Explain your solution. [10]	B) Indien dit vir die afgelope 150 uur onmoontlik was om 'n tipe II-fout te maak, wat was die verwagte tyd wat sy verloor het weens tipe I-foute? Verduidelik jou oplossing. [10]

7

If impossible to make Type 2 error then process has been in control for past 150 hours.

$\left(\frac{17 \text{ cans}}{\text{minute}}\right)\left(\frac{60 \text{ min}}{\text{hour}}\right) = 1020 \text{ cans / hour}$

$\left(\frac{1020 \text{ cans}}{\text{hr}}\right)(150 \text{ hrs}) = 153\,000 \text{ cans}$

As calculated in A, the probability of Type I error is $\frac{1}{900}$:

$\therefore (153\,000)\left(\frac{1}{900}\right) = 170 \text{ cans}$

However, one can doesn't trigger the error:

$\therefore 170 - 1 = 169 \text{ cans}$

It takes 16 minutes to motivate a worker;

$\therefore (16)(169) = 2704$ minutes

Copyright @ 2023 Stellenbosch University. All rights reserved

QUESTION 6/ VRAAG 6 [16]

R functions	R funksies
6.1 Use 2 methods in R by writing the function or code to separate data into subsets of the data? Use the name "data" as your data variable. [2]	**6.1** Gebruik 2 maniere in R deur kode of funksies te skryf om data op te deel in subversamelings? Gebruik die naam "data" vir jou data veranderlike. [2]
subset(data) ✓	
sep (data) ✗	
6.2 What function will return record number (index positions) that match some criteria in a R variable array or data? Use "criteria" as the variable for criteria. [2]	**6.2** Watter funksie sal rekord nommers (indeks posisies) wat aan seker kriteria voldoen as uitset gee indien toegepas op 'n R veranderlike lys of data? Gebruik "kriteria" as die veranderlike vir kriteria. [2]
which (data == "criteria") ✓	
6.3 What code will return TRUE or FALSE values that match some criteria in a R variable array or data? [2]	**6.3** Watter kode sal TRUE of FALSE waardes gee wat aan seker kriteria voldoen in 'n veranderlike lys of data? [2]
which ( ) ✗	
6.4 Give functions that will give the following aspects of data or variable arrays in R. The average, standard deviation, a summary, the largest value and the smallest value "data". [5]	**6.4** Gee funksies wat die volgende aspekte van data of veranderlike lyse in R gee. Die gemiddelde, standaard afwyking, 'n ofpsomming, die grootste waarde en die kleinste waarde van "data". [5]
• Average: mean (data) ✓ • Standard deviation: sd(data) ✓ • largest value: max (data) ✓ • Summary: summary (data) ✓ • Smallest: min (data) ✓	

1

2

0

5

Copyright @ 2023 Stellenbosch University. All rights reserved

6.5 Write the standard structure of a if else loop in R in a function that prints "Even" or "Odd" given a number. [5]	**6.5** Skryf 'n standaard struktuur van 'n "if else" in R binne a funksie wat "Even" of "Odd" druk na gelang van 'n gegewe getal. [5]

if(i %%.2 ==0) {
print("Even")
else
print("Odd")
}	

3

Copyright @ 2023 Stellenbosch University. All rights reserved

QUESTION 7/ VRAAG 7 [10] 9

R Code execution	R Kode uitvoering
Use logic and calculate the correct output (or write what R does).	
Code:	Output:
sum(dnorm(0)<pnorm(0))	TRUE ✗
dnorm(200,mean = 600,sd=7)	0 ✓
pnorm(50, mean = 50, sd = 50) < c(0.3,0.2,0.8)	FALSE FALSE TRUE ✓
pnorm(144, mean = 144, sd = 50) > c(1,0,0.7,0.4)	FALSE TRUE FALSE TRUE ✓
x <- 1:100	Assigns value 1 to 100 to variable x ✓
which(x == 1)	1 ✓
x[-c(1:30, 33:98)] +100	131 132 199 200 ✓
pexp(5,rate=0.2)	0,63212 ✓
qnorm(0.67, mean = 0, sd = 1)	0,44 ✓
qnorm(0.67, mean = 1044, sd = 20)	1052,8 ✓

$z = \frac{50-50}{50} = 0 \therefore p = 0,5$

$z = \frac{144-144}{50} = 0 \therefore p = 0,5$

31 32 99 100
131 132 199 200

$p = 0,67$

$z = \frac{x-0}{1}$

$\therefore z = 0,44$

$\therefore 0,44 = x$

$0,44 = \frac{x-1044}{20}$

$8,8 = x - 1044$

$1052,8 = x$

Copyright @ 2023 Stellenbosch University. All rights reserved

Additional answer space (label your answers clearly).

Copyright @ 2023 Stellenbosch University. All rights reserved

Copyright @ 2023 Stellenbosch University. All rights reserved