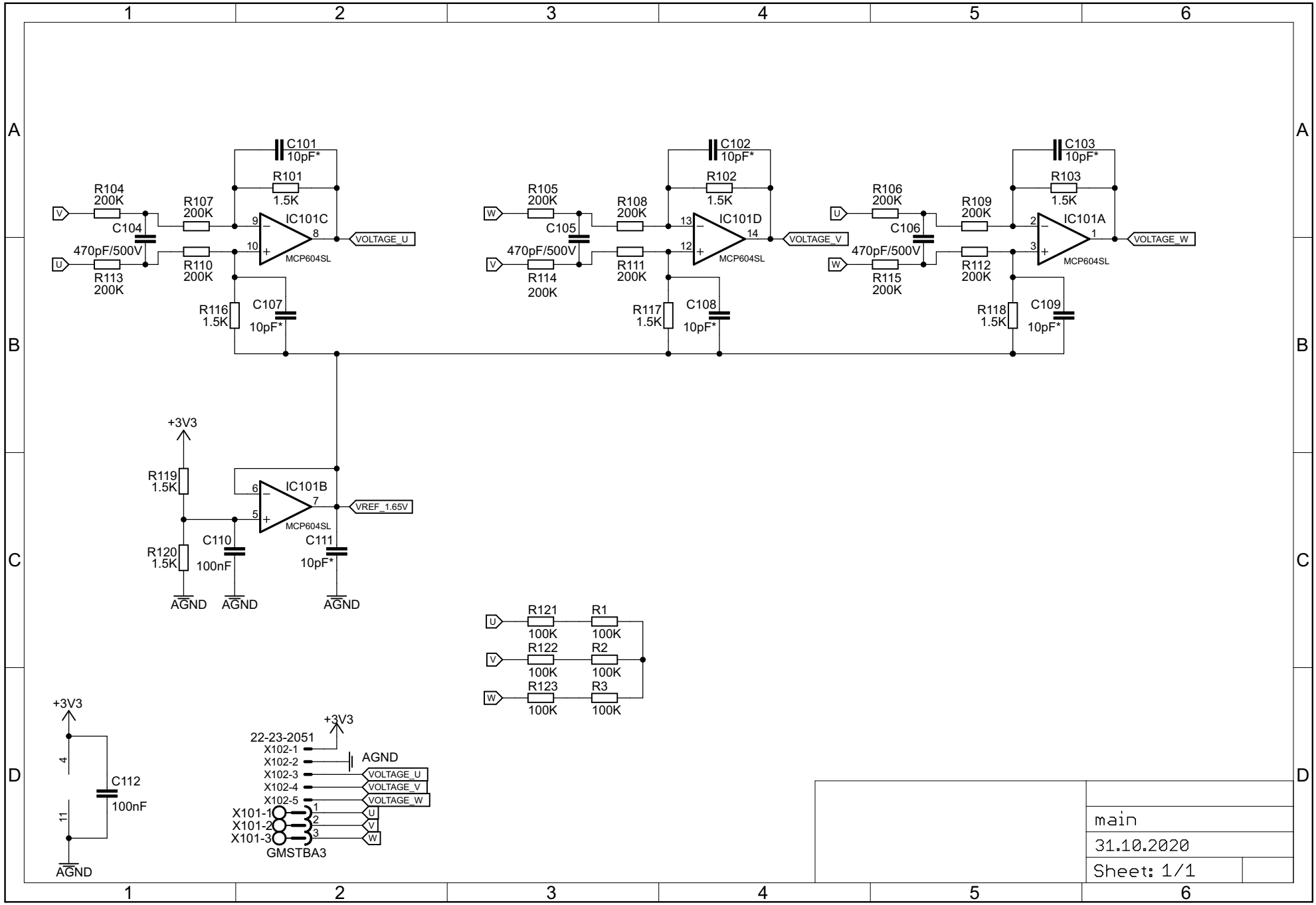


31.10.2020 г. 16:25:13 ч. D:\Developments\Elektronika\Motor Control\Projects\AC Servo\Scheme and Board\VoltageSensing\main.sch (Sheet: 1/1)