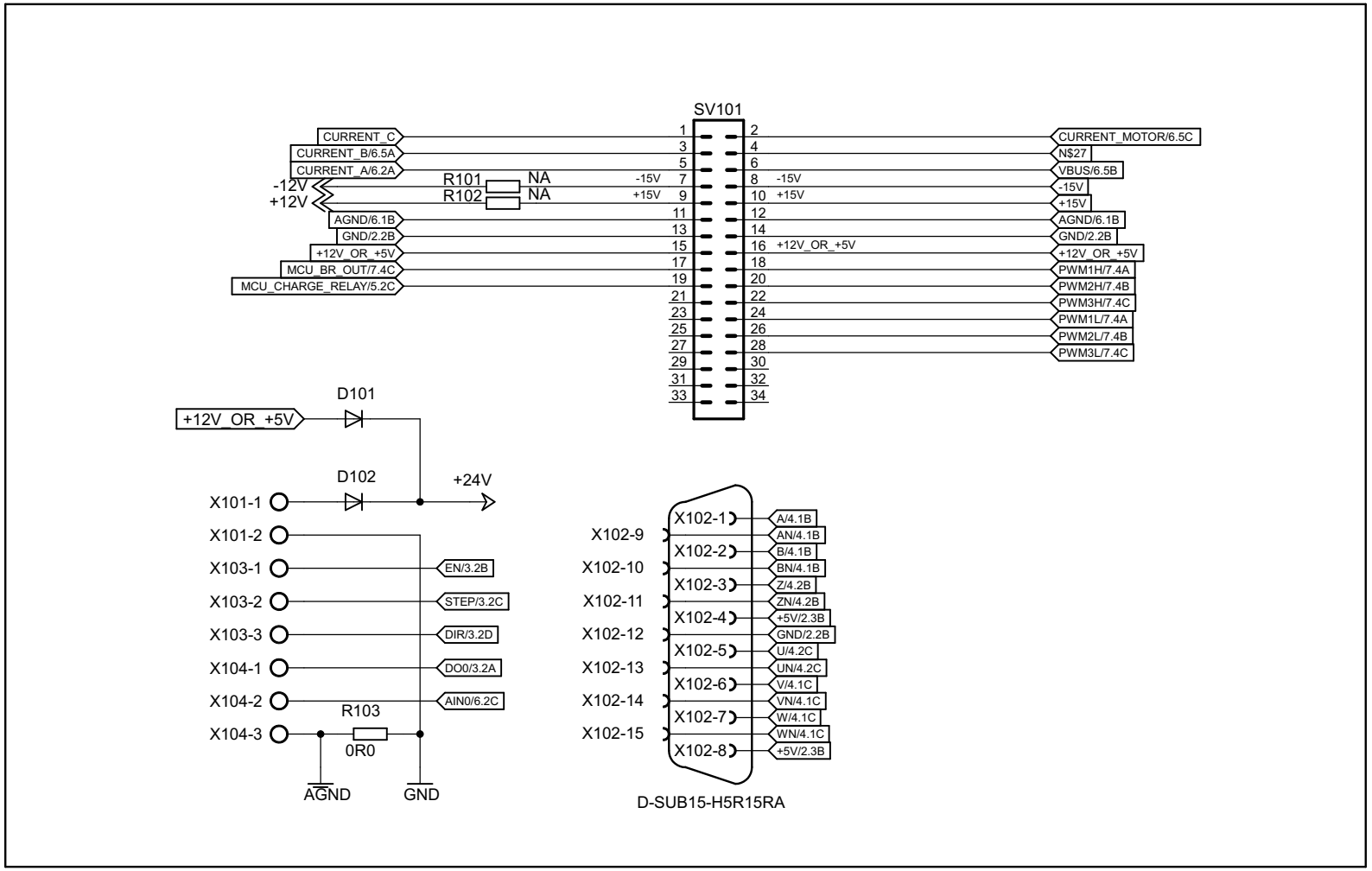

main

10.3.2019

Sheet: 1/9

10.3.2019 г. 04:04:49 ч. D:\Developments\Elektronika\Motor Control\Projects\FOC Servo\Scheme and Board\STM34F4\v.0.0.1\main.sch (Sheet: 1/9)

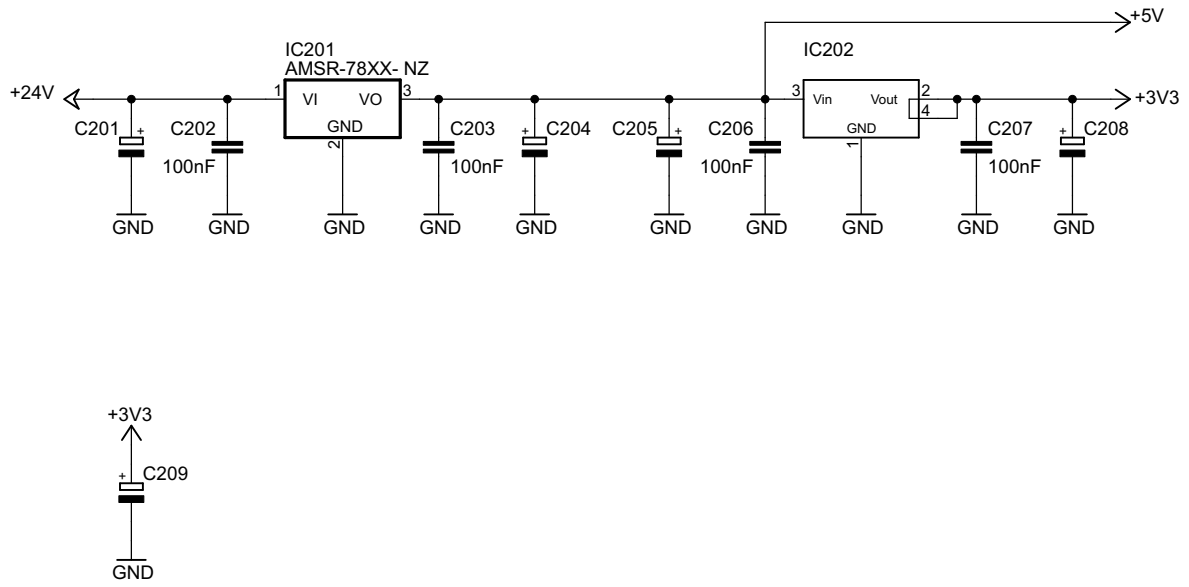

main

10.3.2019

Sheet: 2/9

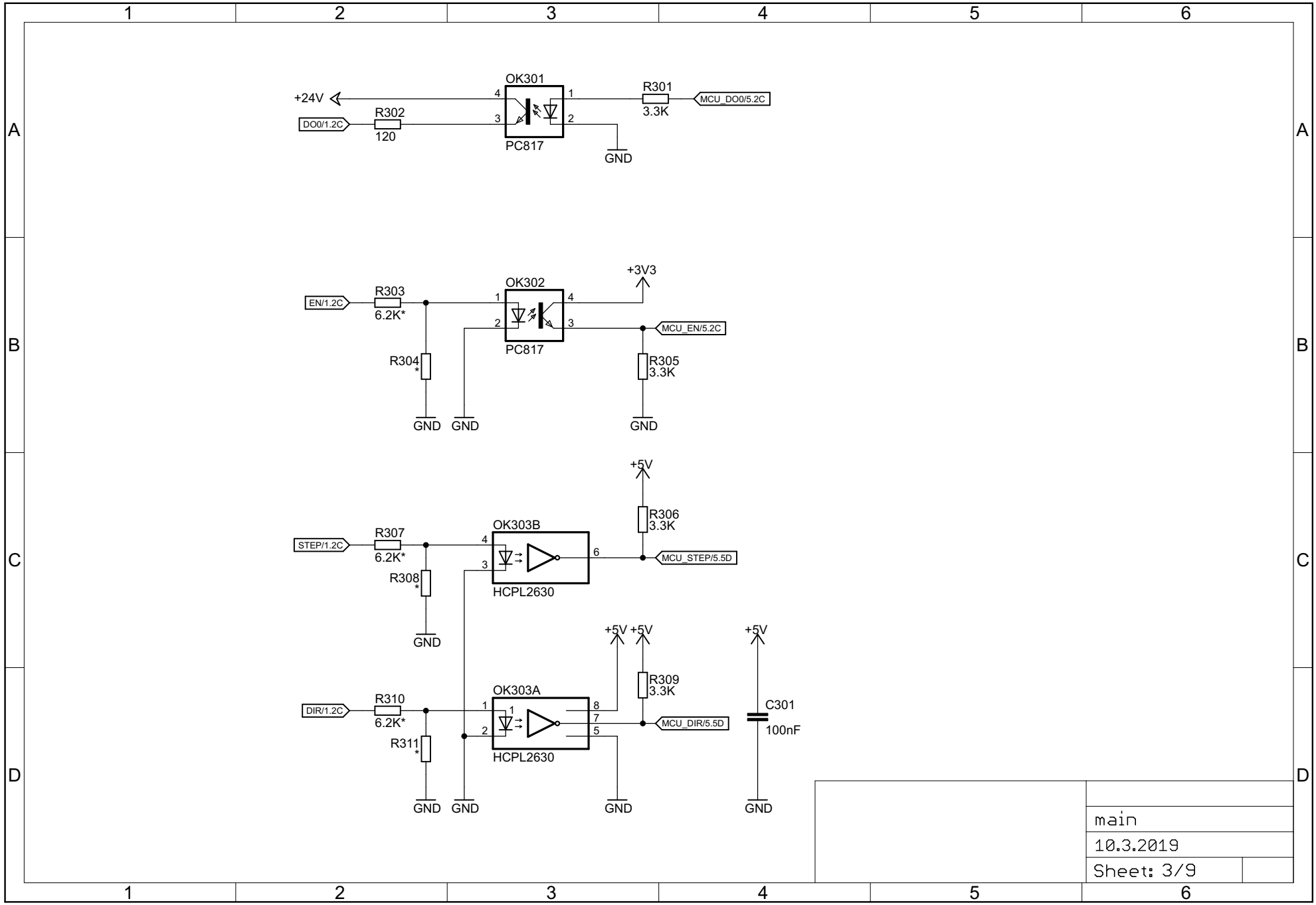

10.3.2019 г. 04:04:49 ч. D:\Developments\Elektronika\Motor Control\Projects\FOC Servo\Scheme and Board\STM34F4\v.0.0.1\main.sch (Sheet: 3/9)

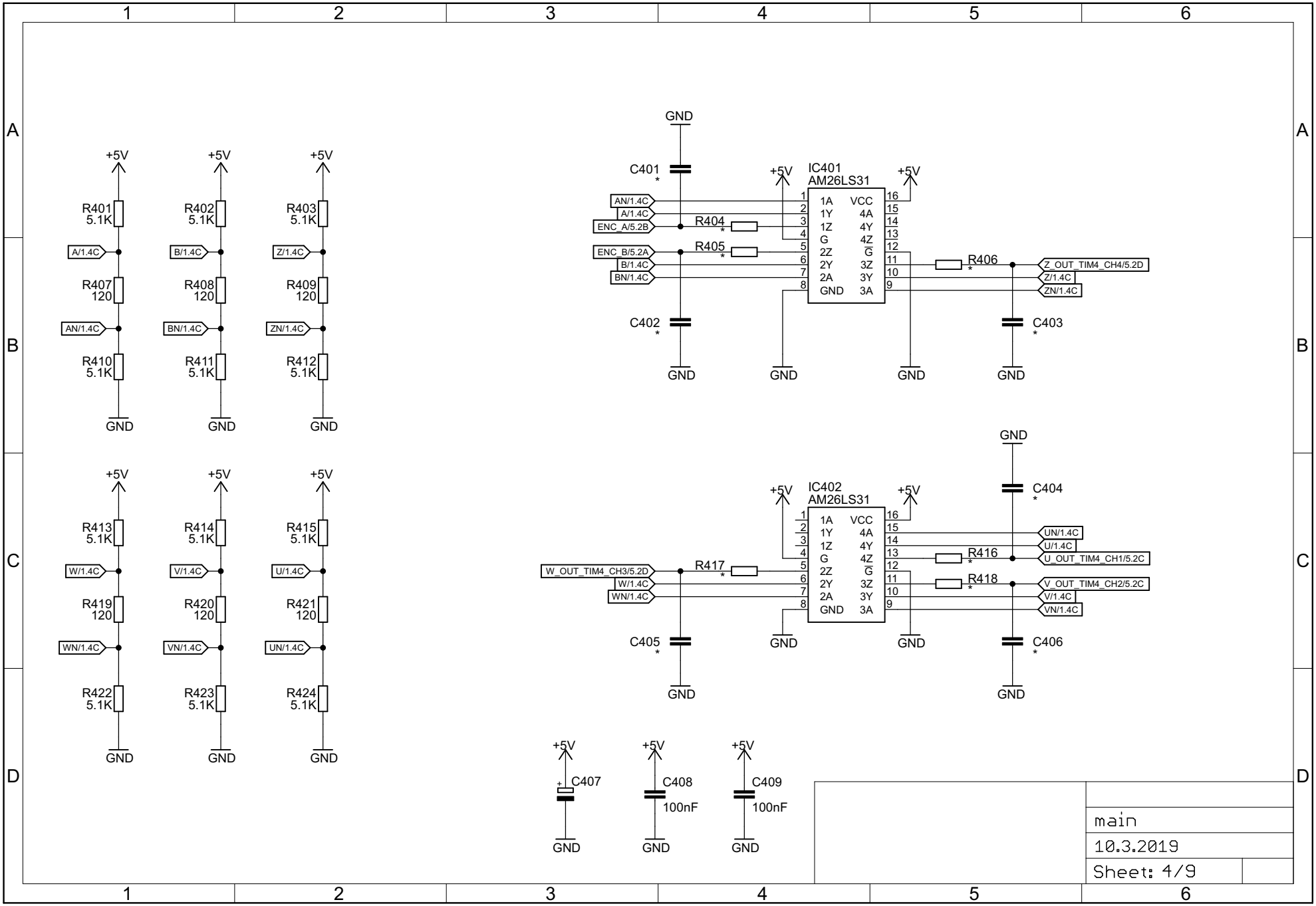
+5V
R401 5.1K
A/1.4C
R407 120
AN/1.4C
R410 5.1K
GND
R402 5.1K
B/1.4C
R408 120
BN/1.4C
R411 5.1K
R403 5.1K
Z/1.4C
R409 120
ZN/1.4C
R412 5.1K
R413 5.1K
W/1.4C
R419 120
WN/1.4C
R422 5.1K
R414 5.1K
V/1.4C
R420 120
VN/1.4C
R423 5.1K
R415 5.1K
U/1.4C
R421 120
UN/1.4C
R424 5.1K
C401 *
C402 *
IC401
AM26LS31
1A VCC
1Y 4A
1Z 4Y
G 4Z
2Z G
2Y 3Z
2A 3Y
GND 3A
AN/1.4C
A/1.4C
ENC_A/5.2B
R404 *
R405 *
ENC_B/5.2A
B/1.4C
BN/1.4C
R406 *
Z_OUT_TIM4_CH4/5.2D
Z/1.4C
ZN/1.4C
C403 *
C404 *
C405 *
C406 *
IC402
AM26LS31
W_OUT_TIM4_CH3/5.2D
W/1.4C
WN/1.4C
R417 *
R416 *
R418 *
UN/1.4C
U/1.4C
U_OUT_TIM4_CH1/5.2C
V_OUT_TIM4_CH2/5.2C
V/1.4C
VN/1.4C
C407
C408
100nF
C409
100nF
main
10.3.2019
Sheet: 4/9

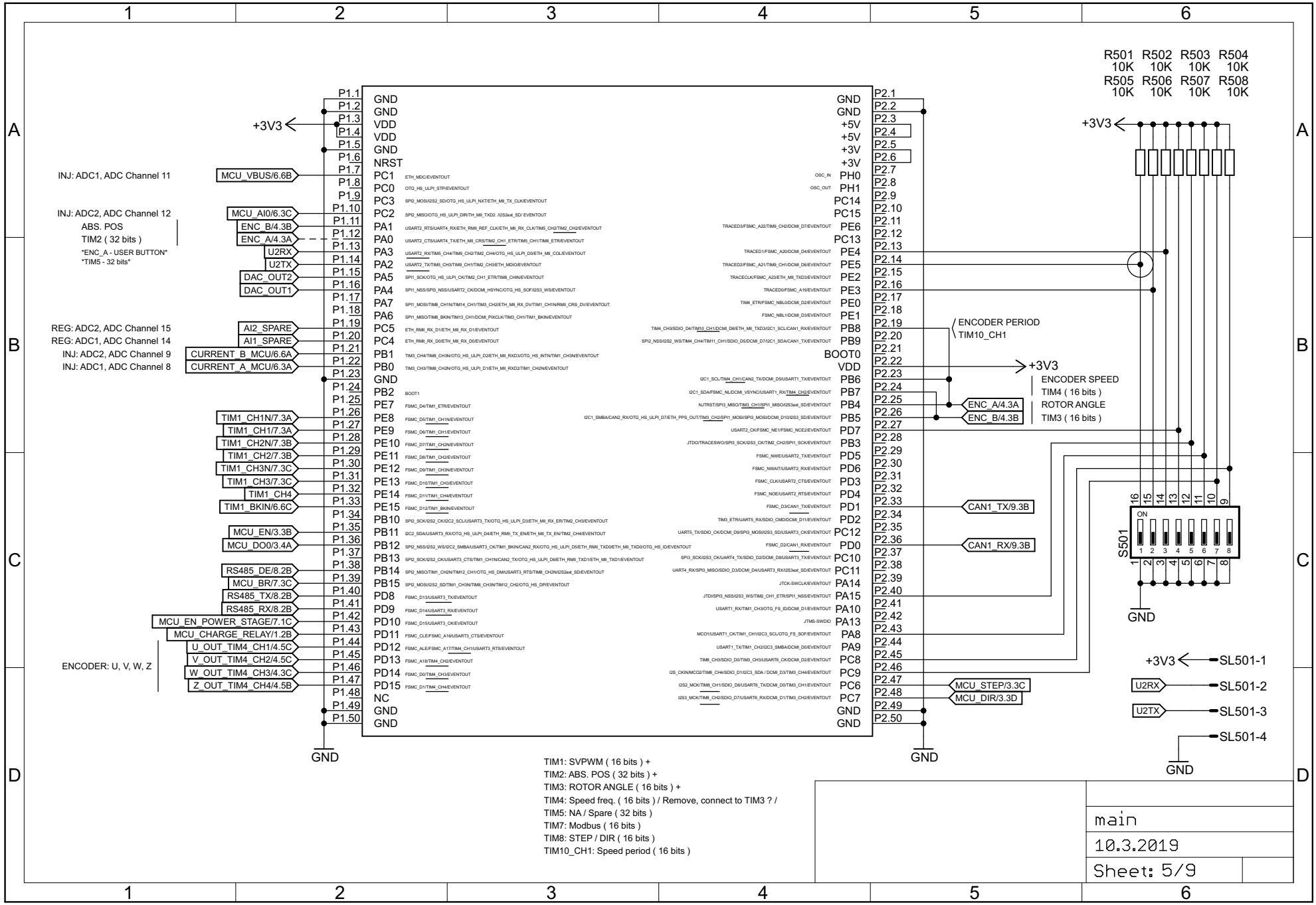

10.3.2019 г. 04:04:49 ч. D:\Developments\Elektronika\Motor Control\Projects\FOC Servo\Scheme and Board\STM34F4\v.0.0.1\main.sch (Sheet: 5/9)

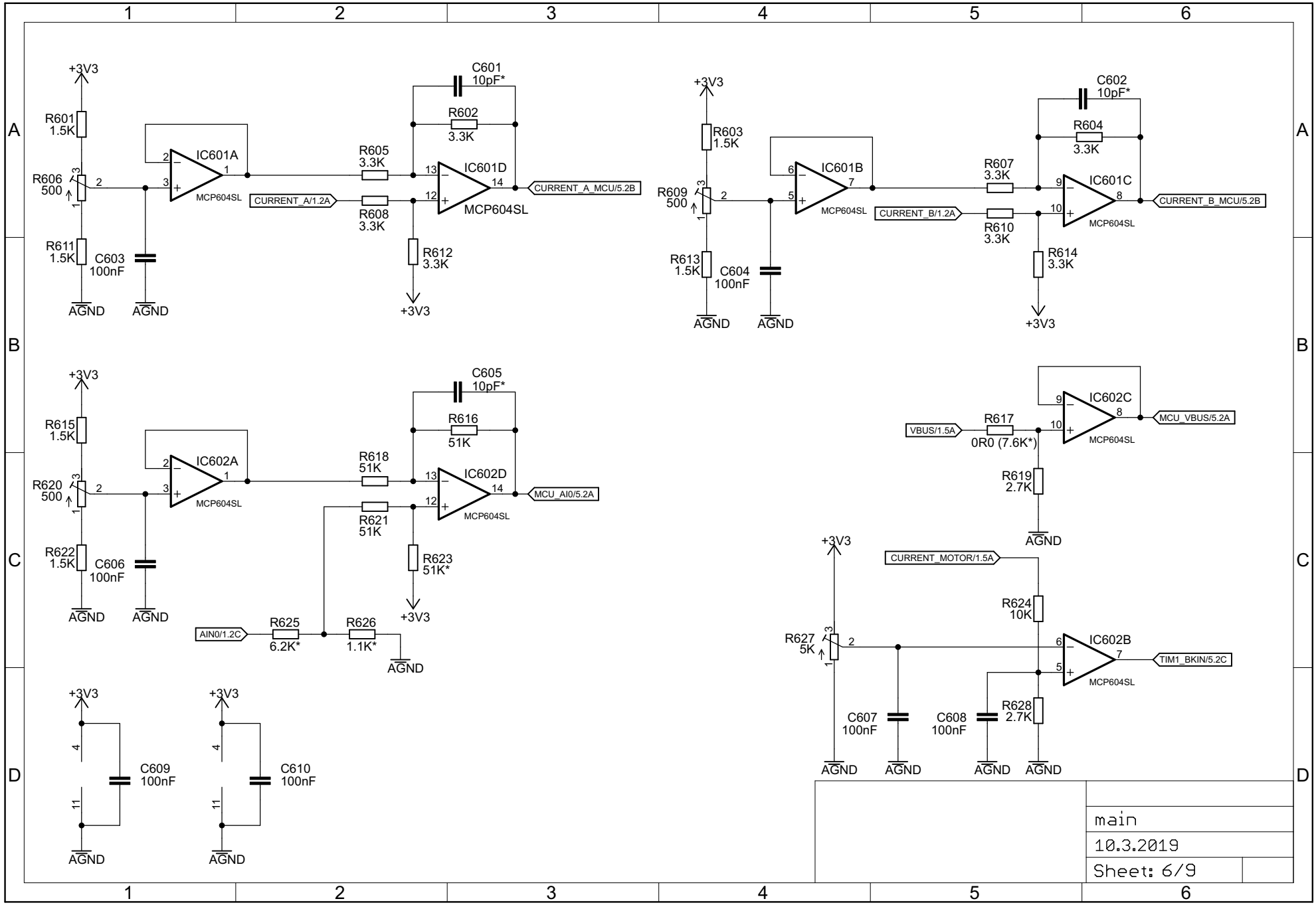

10.3.2019 г. 04:04:49 ч. D:\Developments\Elektronika\Motor Control\Projects\FOC Servo\Scheme and Board\STM34F4\v.0.0.1\main.sch (Sheet: 6/9)

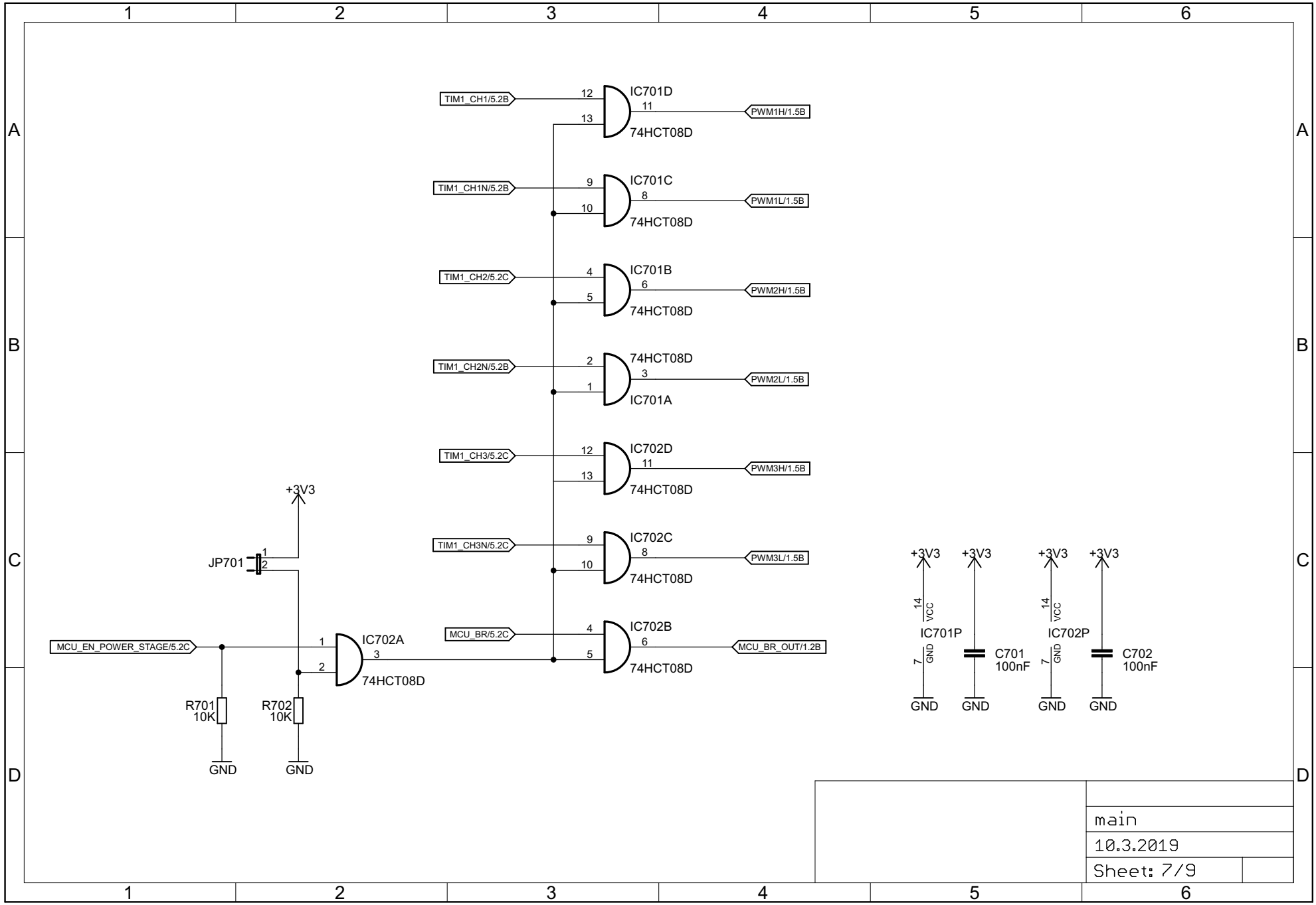

10.3.2019 г. 04:04:49 ч. D:\Developments\Elektronika\Motor Control\Projects\FOC Servo\Scheme and Board\STM34F4\v.0.0.1\main.sch (Sheet: 7/9)

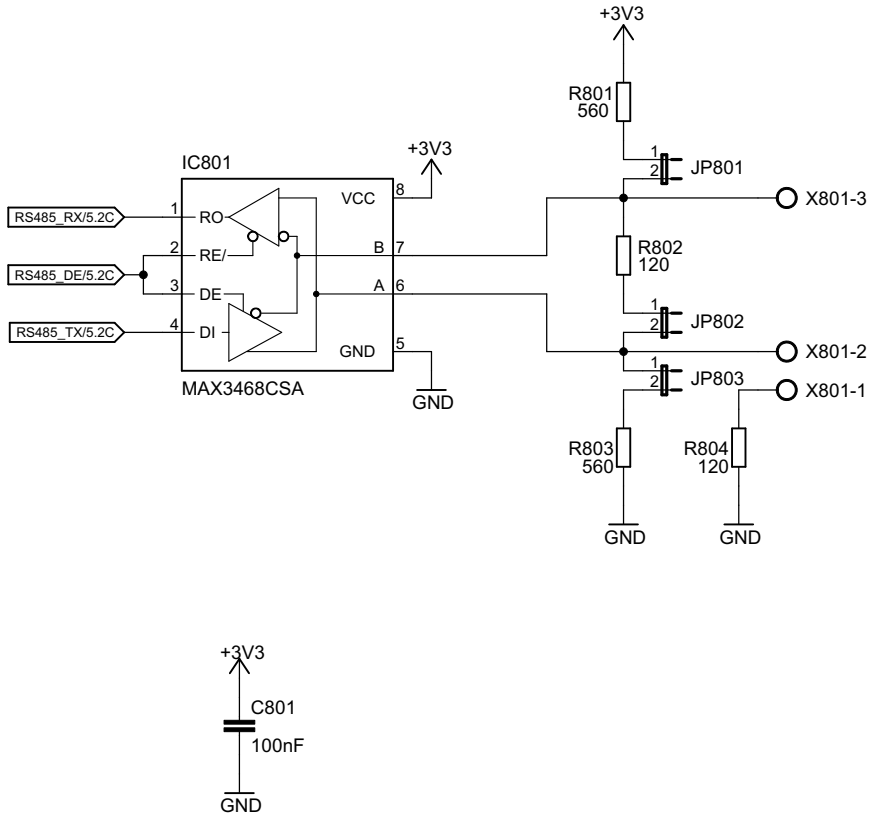

main

10.3.2019

Sheet: 8/9

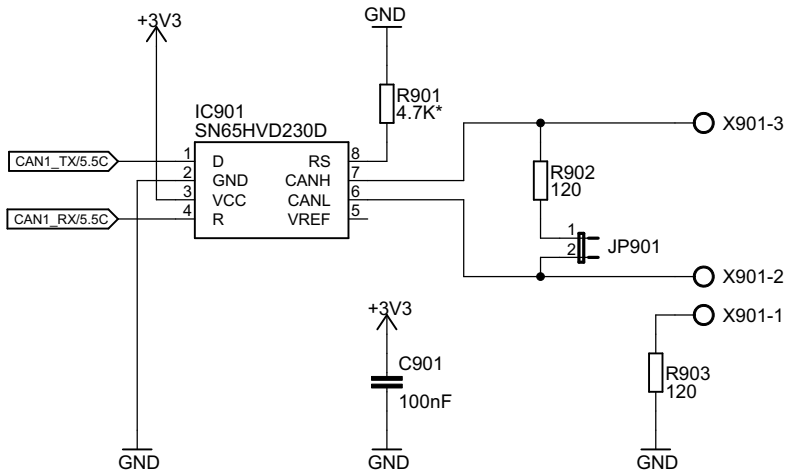

main

10.3.2019

Sheet: 9/9