Error Analysis in PHYS180

Jordan C. Hanson

February 13, 2026

Abstract

Scientific measurements cannot be quoted without an assessment of the precision. We quantify this precision in the form of error analysis. Rather than originating from *human error*, *statistical errors* arrise from the intrinsic uncertainty encounted in measuring quantities with real instruments. Further, errors *propagate* through calculations.

1 Instrumental Precision

The instrumental precision of a piece of data is determined by the smallest division on the instrument. For example, suppose a length is measured with a meter stick, and the smallest divisions on the meter stick are 1 millimeter. If the length measured is 31.0 cm, then that result must be stated as 31.0 ± 0.1 cm.

2 Accuracy versus Precision

Accuracy and precision are not the same concept. Accuracy is how far the measured result is from the true value, whereas precision compares the statistical error of a measurement to the measured value itself. A measurement of 31.0 ± 0.1 cm is precise, because 0.1 cm is small compared to 31.0 cm. It is not *accurate* if the true length is 29.0 cm. Why? Because the numbers 31.0 cm and 29.0 cm are separated by $(31.0 - 29.0)/0.1 = 20$ factors of the error.

3 Statistical or Random Error

Suppose a measurement is made with a dial, where a needle is pointing to a number, but vibrating. When the dial is read one moment, it reads 101.3 kPa, and in another moment, 101.2 kPa. Which pressure measurement of the atmosphere is correct? It turns out that upon repeated measurements, the *distribution* of measurements resembles Fig. 1.

The true pressure is most likely 101.3 kPa. The dial needle is moving, however, making identification of the true pressure impossible. The true value is ascertained from the statistical distribution. The *mean* or average of the distribution is 101.3 kPa, and the *standard deviation* is about 0.2 kPa. Equation 1 represents the standard deviation procedure. First, the mean $\bar{x}$ is calculated for the collection of measurements x_i. Next, the quantity $(x_i - \bar{x})^2$ is computed for each x_i. Next, the sum of these quantities is found, dividing by N[1], where N is the number of measurements.

[1] Technically, we should divide by $N - 1$ since the mean has already accounted for one degree of freedom, but in practice where N is a large number, this rarely matters.

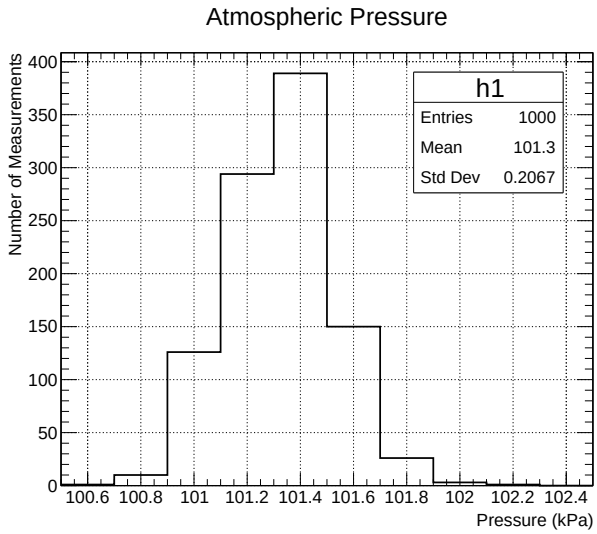

Figure 1: An example of a distribution of measurements from one instrument: a pressure gauge.

This result is called the *variance*, σ^2. Finally the square root of the variance is taken to find the standard deviation: $\sqrt{\sigma^2} = \sigma$.

$$\sigma_x = \sqrt{\frac{1}{N}\left(\sum_{i=1}^{N}(x_i - \bar{x})^2\right)} \tag{1}$$

4 Analysis of Data Subject to Random Error

Imagine we are trying to measure the current flowing through a resistor by measuring the voltage across it, and measuring the resistance of the resistor. The numbers should satisfy Ohm's law:

$$V = IR \tag{2}$$

Suppose we make a measurement of the current, with an associated error: $I \pm \sigma_I$. Now, we double the voltage, and measure the current (which should double). What happens to the error σ_I? Naturally, it should also double:

$$2(I \pm \sigma_I) = 2I \pm 2\sigma_I \tag{3}$$

In general, for a variable x being measured, multiplied by an error-less constant, we have

$$k(x \pm \sigma_x) = kx \pm k\sigma_x \tag{4}$$

It turns out there are several rules for how to address the combination of variables subject to statistical error. This is also called the *propagation of errors.*

4.1 Addition and Subtraction of variables with errors

Suppose we are measuring the total resistance by measuring two resistors *in series* individually, and summing them. The resistances add, so

$$R_{tot} = R_1 + R_2 \tag{5}$$

Regarding addition and subtraction of variables $x \pm \sigma_x$ and $y \pm \sigma_y$, it turns out that

$$(x \pm \sigma_x) + (y \pm \sigma_y) = (x + y) \pm \sqrt{\sigma_x^2 + \sigma_y^2} \tag{6}$$

$$(x \pm \sigma_x) - (y \pm \sigma_y) = (x - y) \pm \sqrt{\sigma_x^2 + \sigma_y^2} \tag{7}$$

Thus, the appropriate formula for our addition of resistances would be Eq. 6:

$$(R_1 \pm \sigma_{R1}) + (R_2 \pm \sigma_{R2}) = (R_1 + R_2) \pm \sqrt{\sigma_{R1}^2 + \sigma_{R2}^2} \tag{8}$$

The pattern in Eq. 6 is called *adding in quadrature*. The formula for the error of added or subtracted variables x and y is

$$\sigma_{x \pm y} = \sqrt{\sigma_x^2 + \sigma_y^2} \tag{9}$$

4.2 Multiplication and Division of variables with errors

Suppose we are trying to quantify the momentum of a system with mass m and speed v:

$$p = mv \tag{10}$$

We measure the mass: $m \pm \sigma_m$, and the speed: $v \pm \sigma_v$. The *fractional error* in the momentum, speed, and mass are $\frac{\sigma_p}{p}$, $\frac{\sigma_v}{v}$, and $\frac{\sigma_m}{m}$ respectively. The relationship between the fractional error in momentum and the other two is

$$\left(\frac{\sigma_p}{p}\right)^2 = \left(\frac{\sigma_m}{m}\right)^2 + \left(\frac{\sigma_v}{v}\right)^2 \tag{11}$$

Notice that the fractional errors of the mass and speed are added in quadrature (summing squares) to produce the frational error of the momentum. Thus, to quote a measurement of momentum, the result is:

$$p = (mv) \pm (mv)\sqrt{\left(\frac{\sigma_m}{m}\right)^2 + \left(\frac{\sigma_v}{v}\right)^2} \tag{12}$$

In other words, when two variables are *multiplied or divided*, the *fractional errors* are combined rather than the *absolute errors* as with variables that are *added or subtracted.* In general, if $f = xy$ or $f = x/y$ or $f = y/x$:

$$\left(\frac{\sigma_f}{f}\right)^2 = \left(\frac{\sigma_x}{x}\right)^2 + \left(\frac{\sigma_y}{y}\right)^2 \tag{13}$$

5 DC Circuit Lab

Consider the **voltage divider** in Fig. 2 (left). We can show that the ratio of V_{out} to V_{in} is

$$\frac{V_{out}}{V_{in}} = \frac{R_2}{R_1 + R_2} \tag{14}$$

If the two resistors are equal the voltage is reduced by a factor of two, for example. Consider the voltage divider in Fig. 2 (right), with 4 ports. We can select a voltage that is equal to the input voltage times one of four possible values.

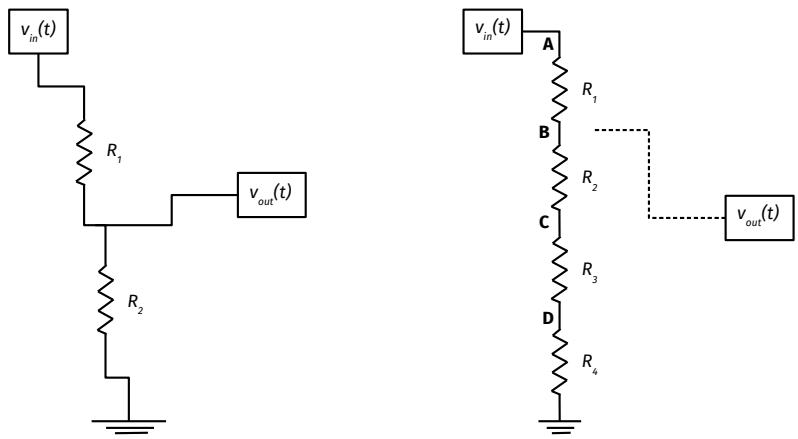

Figure 2: (Left) This DC circuit is known as a voltage divider, because it can change a voltage by a fixed ratio. (Right) By connecting the output at different points, the ratio can be tuned.

Procedure:

1. Using the (1) breadboard, (2) DC power supply, (3) cables, (4) resistors, and (4) voltmeter, construct Fig. 2 (right).

2. Place a voltage ≈ 4.0 V as the input voltage, and use all four resistors in the voltage divider.

3. Record the voltage at the four locations **A through D.** Associate a statistical error with each of your measurements. Using the voltmeter, this is like assigning 100% fractional error to the significant digit beyond the precision of the meter. For example, if the meter reads 4.01, the error is 0.005 V. Record your results below:

   (a) Voltage at point **A**:

   (b) Voltage at point **B**:

   (c) Voltage at point **C**:

   (d) Voltage at point **D**:

4. Measure the resistances of R_1 through R_4, and record associated errors. Use the resistance scale on the digital multi-meter marked with the varying levels of Ω. The process is similar to measuring voltages, but on a different side of the dial. Record your results in kΩ.

(a) R_1:

(b) R_2:

(c) R_3:

(d) R_4:

5. ***Predict the values of*** V_{out}/V_{in} **given the resistor values, including error propagation.** 1) Convince yourself that $V_A = V_{in}$ should be true. 2) It turns out that

$$V_B/V_{in} = \frac{R_2 + R_3 + R_4}{R_1 + R_2 + R_3 + R_4} \tag{15}$$

$$V_C/V_{in} = \frac{R_3 + R_4}{R_1 + R_2 + R_3 + R_4} \tag{16}$$

$$V_D/V_{in} = \frac{R_4}{R_1 + R_2 + R_3 + R_4} \tag{17}$$

3) Plug in the resistance measurements to obtain predictions for the voltage fractions, and record them below. 4) Using the error propagation rules for adding variables, derive the errors of the numerators and denominators of V_B/V_{in}, V_C/V_{in}, and V_D/V_{in}. 5) Using the error propagation rules for dividing variables, derive the expected errors of the fractions V_B/V_{in}, V_C/V_{in}, and V_D/V_{in}.

(a) $V_B/V_{in} =$ _____ $\pm$ _____

(b) $V_C/V_{in} =$ _____ $\pm$ _____

(c) $V_D/V_{in} =$ _____ $\pm$ _____

6. Compare these results to the measurements of V_{in}/V_A, V_B/V_{in}, V_C/V_{in}, and V_D/V_{in}. Do the results agree? Why or why not?