Monday Warm Up: DC circuits, Voltmeters and Ammeters

Prof. Jordan C. Hanson

February 23, 2026

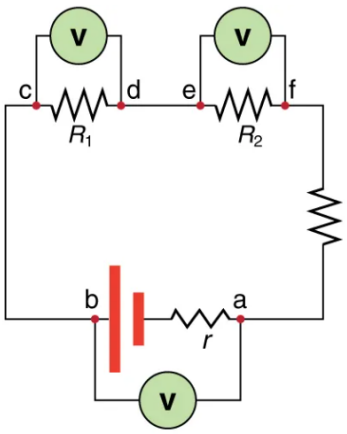

Figure 1: A series circuit with three voltmeters **V** measuring voltages across two resistors and a battery.

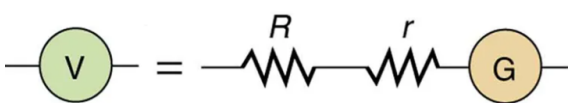

Figure 2: The internal structure of a voltmeter.

1 Memory Bank

- $V = IR$ ... Ohm's Law.
- $P = IV = I^2R = V^2/R$ ... Power consumption.

2 Voltmeters and Ammeters

1. Consider Fig. 1. A voltmeter is placed *in parallel* with the voltage measured. In Fig. 2, the internal structure of the voltmeter is shown, with the *galvanometer* **G**. A galvanometer bends a needle in the presence of a current inside a magnetic field. Suppose the resistance R and internal resistance r are 200 kΩ and 20 Ω, respectively. (a) If the voltage across R_1 is 2.5 V, what current (in μA) that flows through **G**? (b) What would the result be if $r = 0$? (c) If **G** produces a maximum reading when the current is 50 μA, what fracion of that maximum is displayed on **G** here?

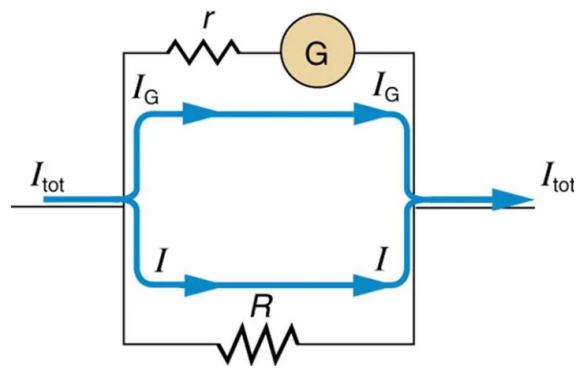

Figure 3: The internal structure of an ammeter.

2. Suppose the EMF of the battery is 5V, and $R_1 = R_2 = 100\ \Omega$. Also, let the right-hand resistor with no label be 100 Ω. (a) If the internal battery resistance is $r = 0.1\ \Omega$, what current flows? (b) What does the **V** across the battery read?

3. Consider Fig. 3, in which the internal structure of an ammeter is shown. Suppose $I_{\text{tot}} = 2.0$ A. (a) If we want the current I_G to be a small fraction of the total current flowing through the system, should we choose $r \gg R$, or $r \ll R$? (b) Choose r and R so that the total ammeter resistance is $\approx 0.5\ \Omega$, but I_{G} through **G** is 20 μA.