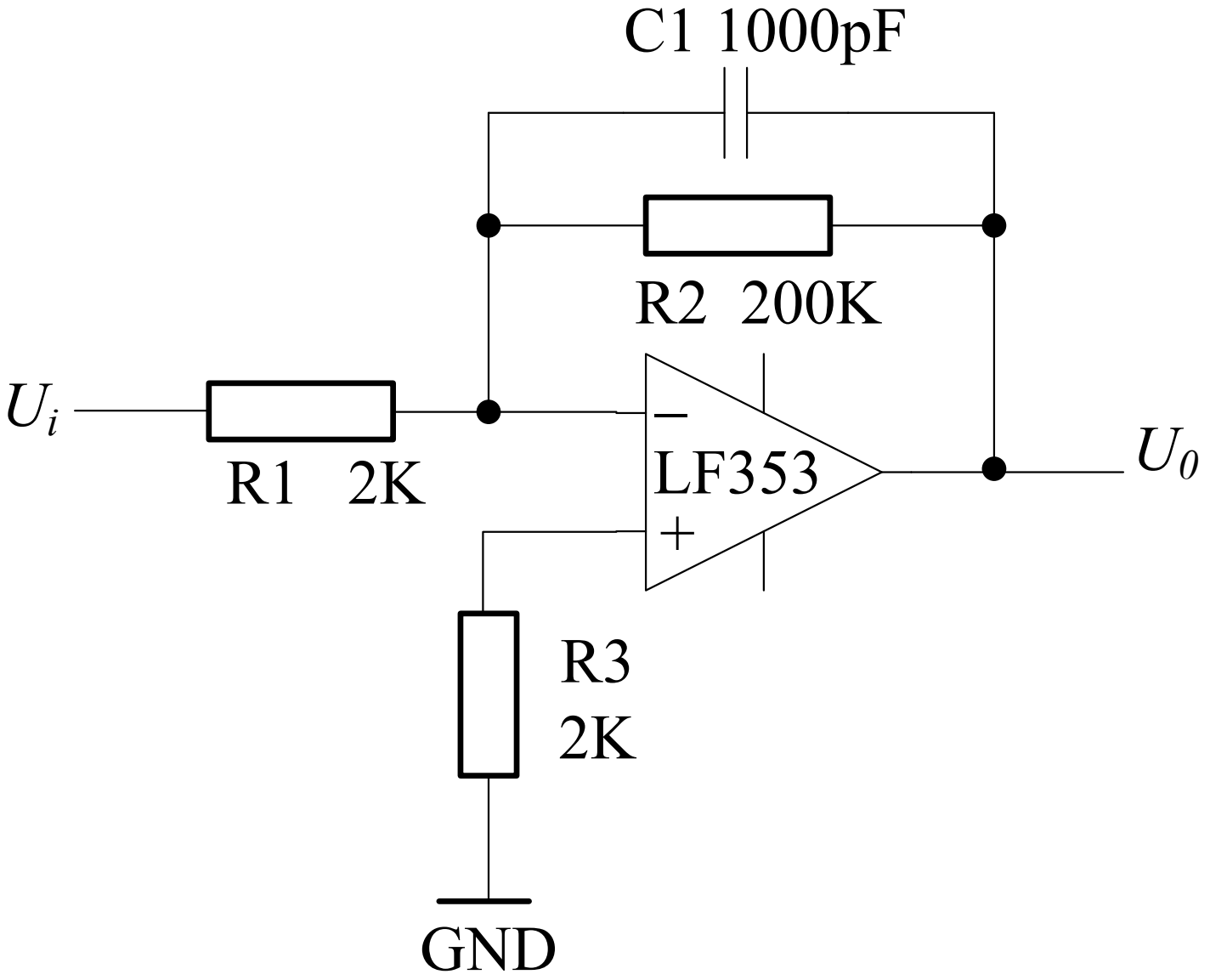
C1 1000pF
R2 200K
U_i
R1 2K
LF353
U_0
R3
2K
GND