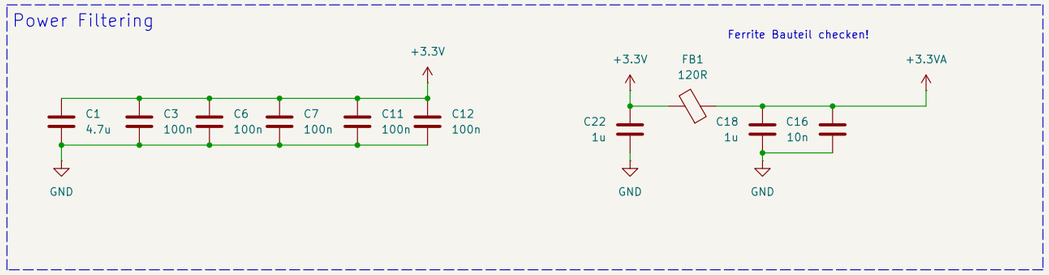


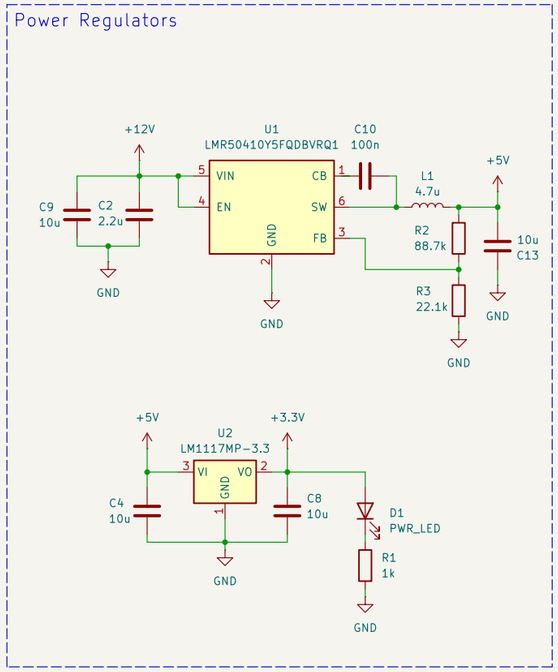


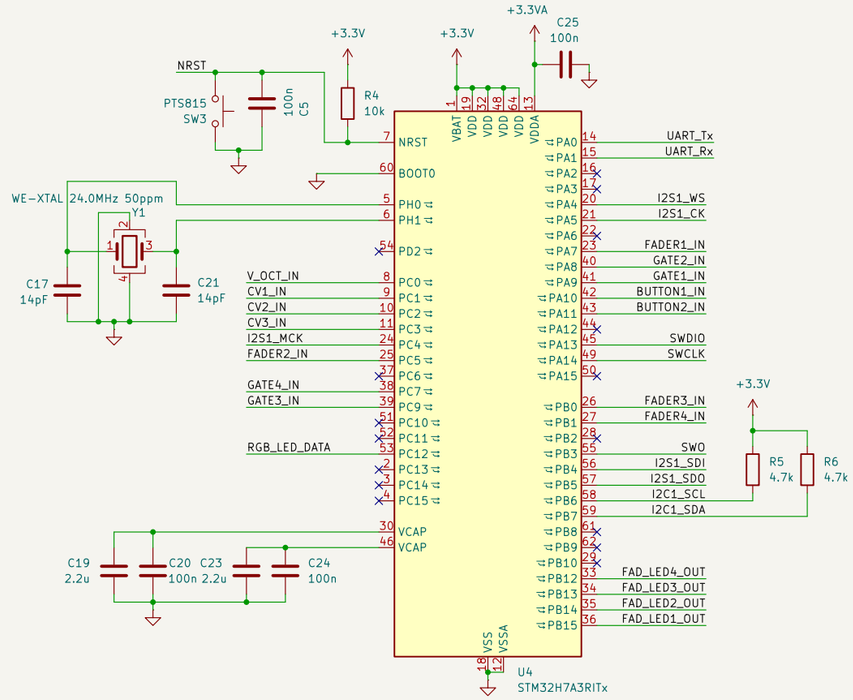


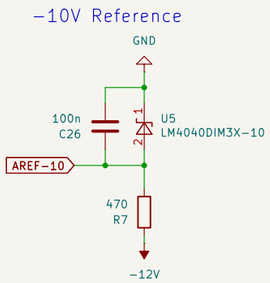


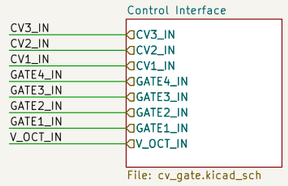


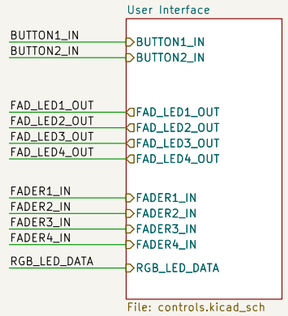


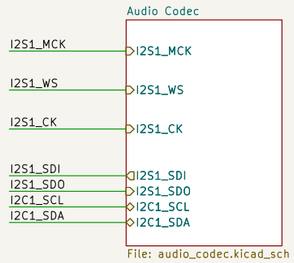


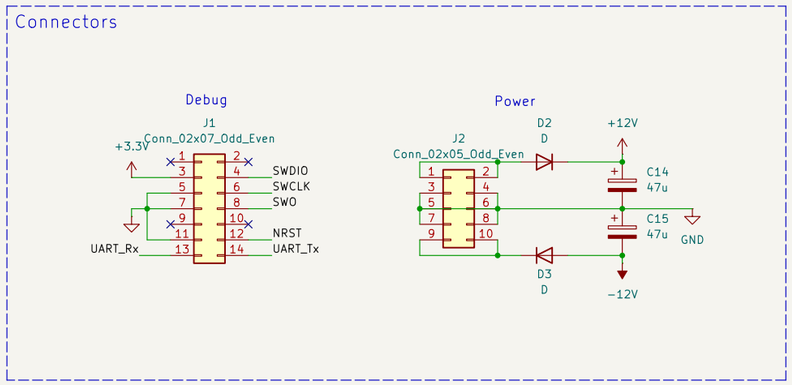

Bachelor Computer Science and Systems Engineering
TH Köln
Jonas Bengt Lux
**Aware Modular**

Sheet: /
File: aware01_h7_rev2_0.kicad_sch

**Title: Aware 01 – Eurorack DSP Module**

| | | |
|---|---|---|
| Size: A3 | Date: 2026-03-28 | Rev: 2 |
| KiCad E.D.A. 10.0.0 | | Id: 1/5 |

# User Interface

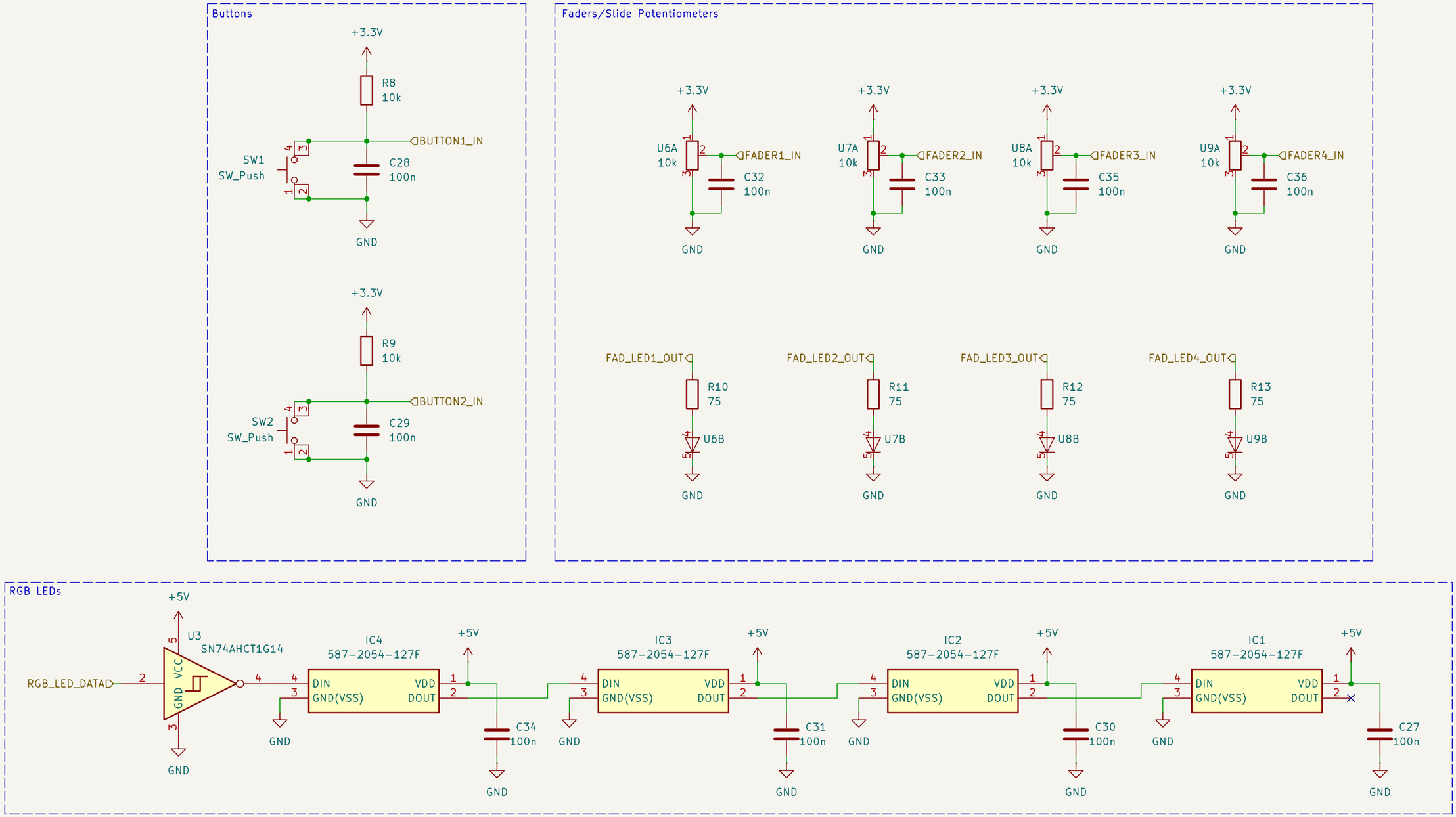


Bachelor Computer Science and Systems Engineering
TH Köln
Jonas Bengt Lux
**Aware Modular**

Sheet: /User Interface/
File: controls.kicad_sch

***Title: Aware 01 – Eurorack DSP Module***

| | | |
|---|---|---|
| Size: A4 | Date: 2026-03-28 | **Rev: 2** |
| KiCad E.D.A. 10.0.0 | | Id: 4/5 |

# Audio Codec

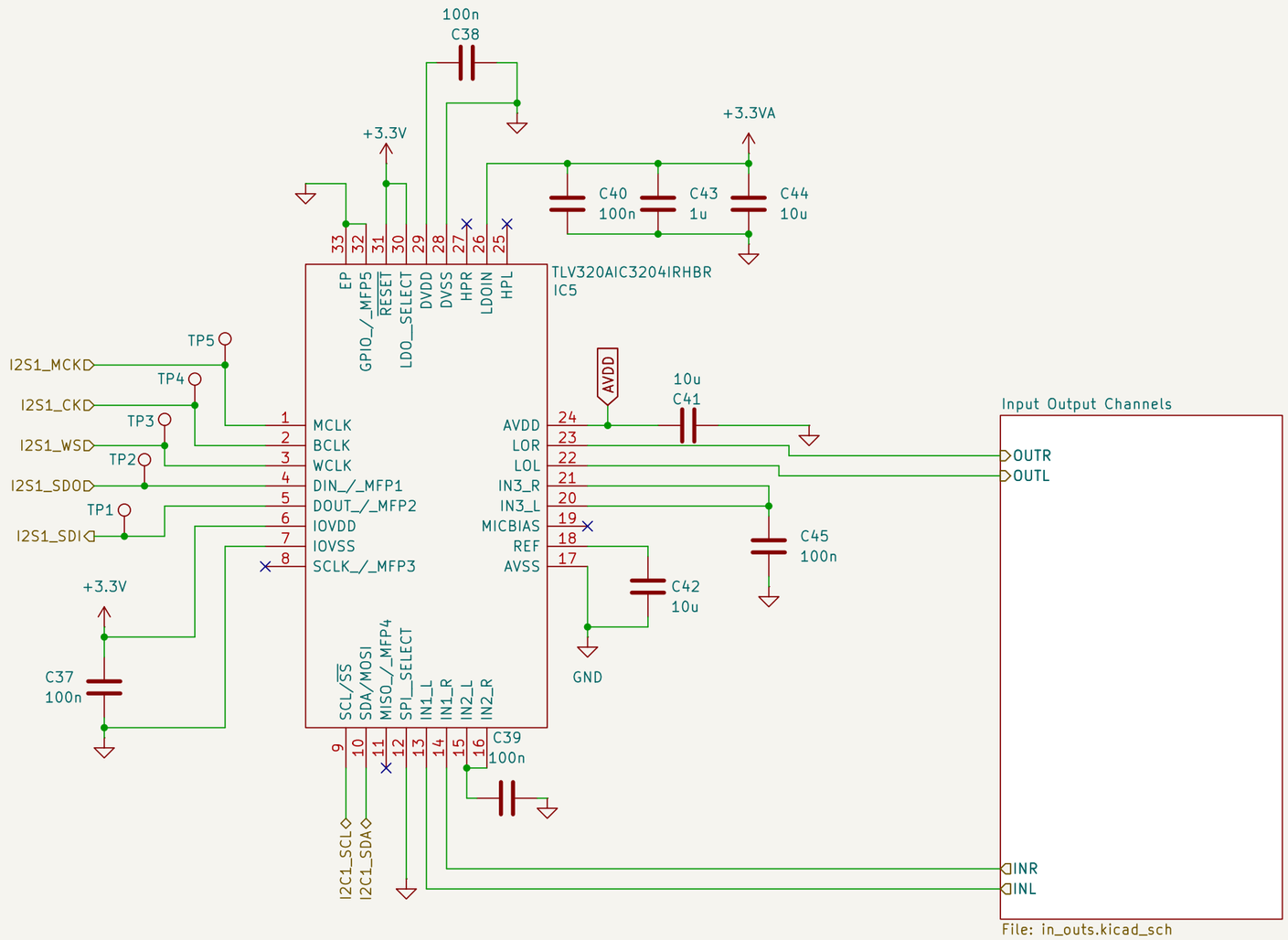


Bachelor Computer Science and Systems Engineering
TH Köln
Jonas Bengt Lux
**Aware Modular**

Sheet: /Audio Codec/
File: audio_codec.kicad_sch

***Title: Aware 01 – Eurorack DSP Module***

| | | |
|---|---|---|
| Size: A4 | Date: 2026-03-28 | **Rev: 2** |
| KiCad E.D.A. 10.0.0 | | Id: 7/5 |

# In/Out Stages

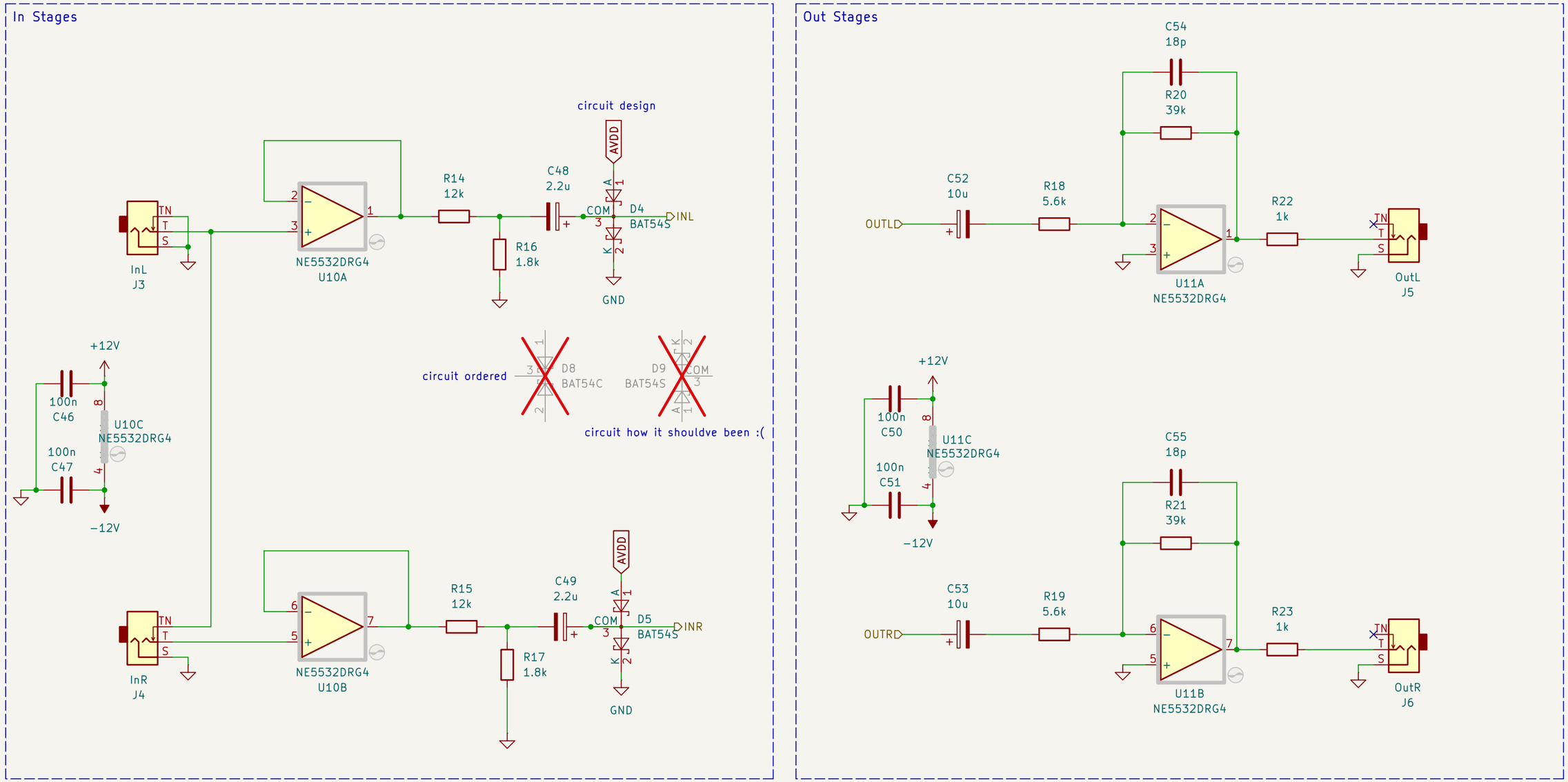


Bachelor Computer Science and Systems Engineering
TH Köln
Jonas Bengt Lux
**Aware Modular**

Sheet: /Audio Codec/Input Output Channels/
File: in_outs.kicad_sch

***Title: Aware 01 – Eurorack DSP Module***

| | | |
|---|---|---|
| Size: A4 | Date: 2026-03-28 | **Rev: 2** |
| KiCad E.D.A. 10.0.0 | | Id: 8/5 |

# Control Interface

## Gate Inputs

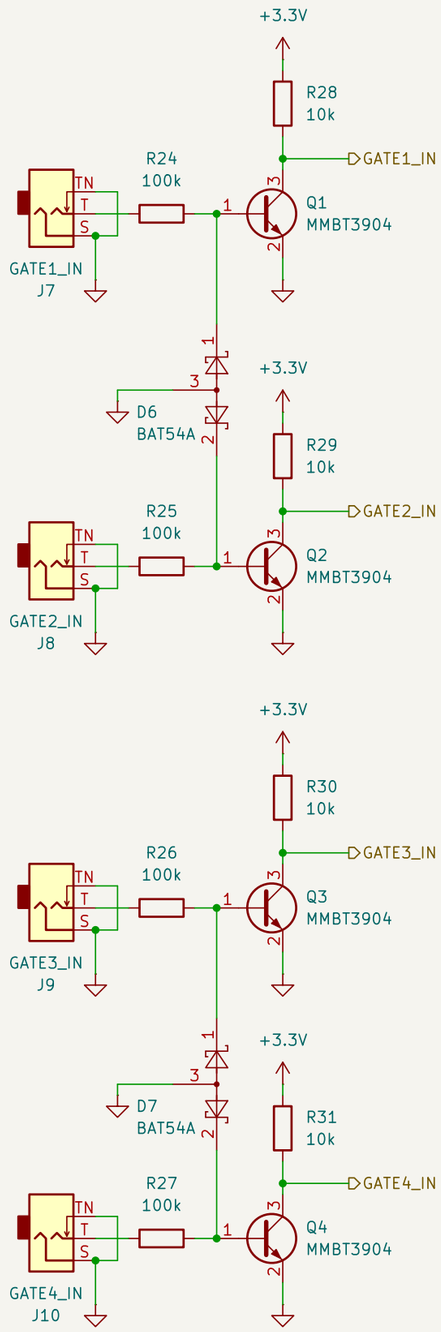


## CV Inputs

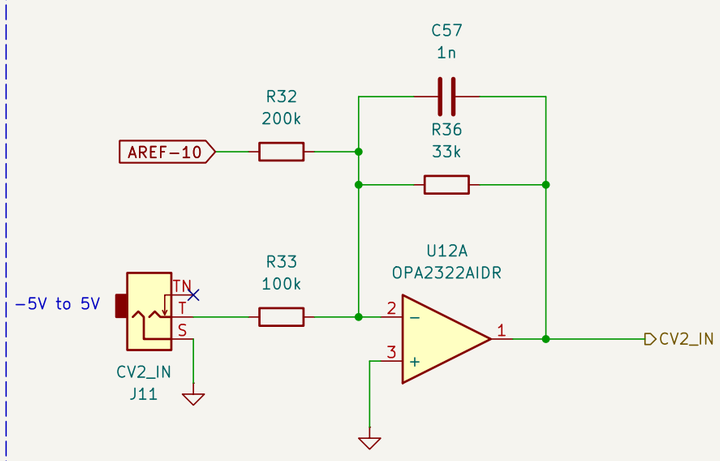


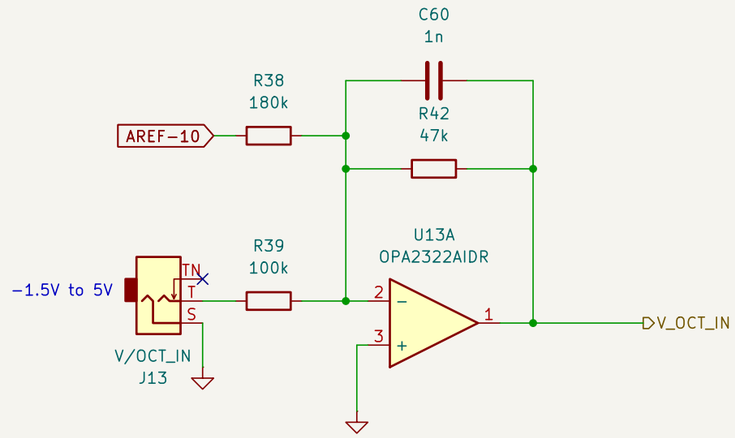


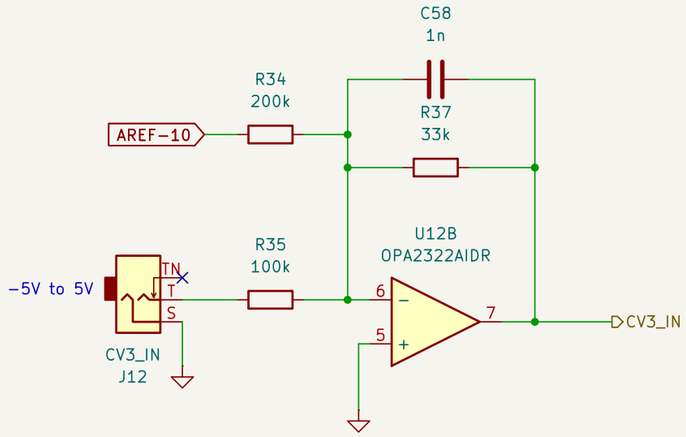


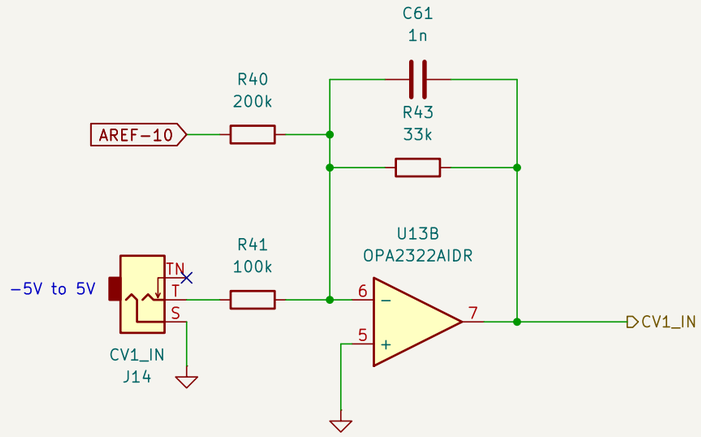


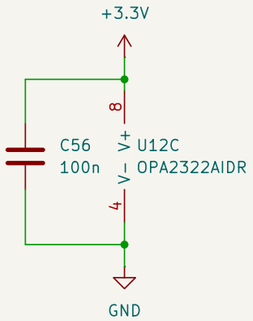


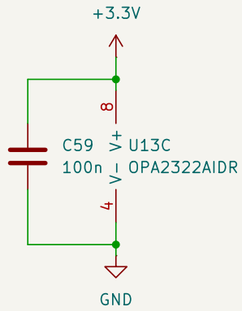



Bachelor Computer Science and Systems Engineering
TH Köln
Jonas Bengt Lux
**Aware Modular**


Sheet: /Control Interface/
File: cv_gate.kicad_sch

**Title: Aware 01 – Eurorack DSP Module**

| | | |
|---|---|---|
| Size: A4 | Date: 2026-03-28 | **Rev: 2** |
| KiCad E.D.A. 10.0.0 | | Id: 9/5 |