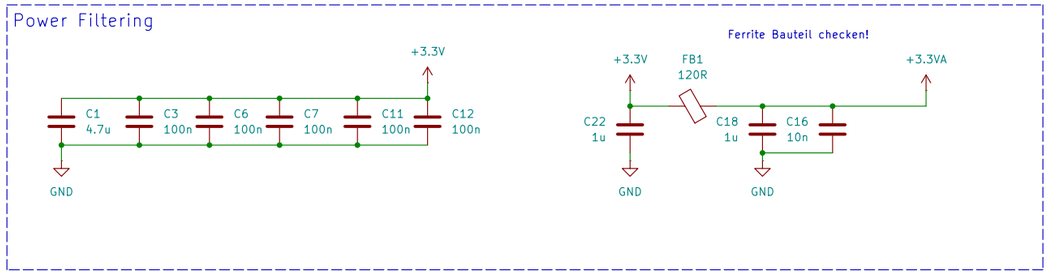

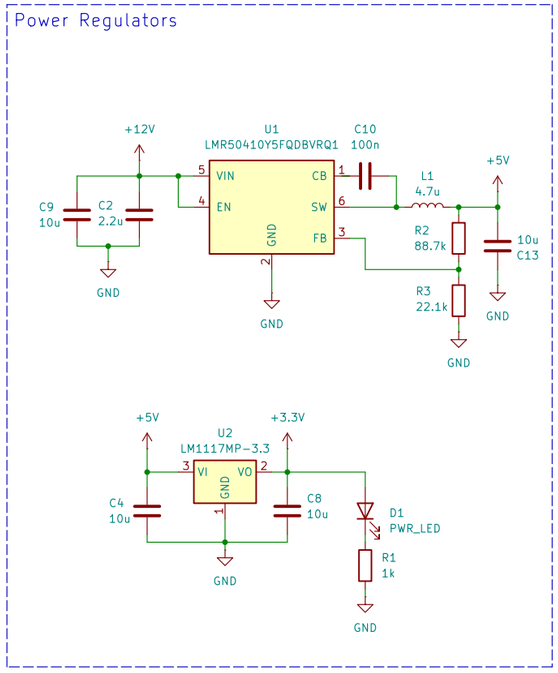

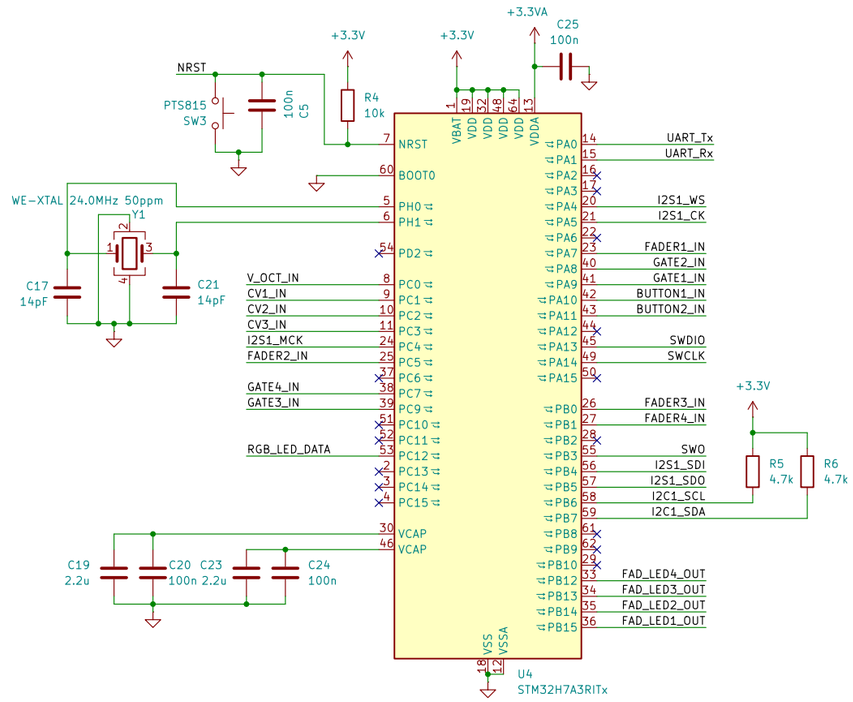

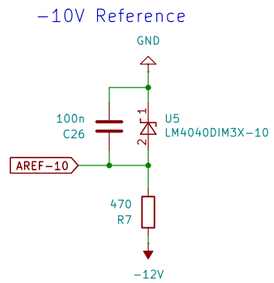

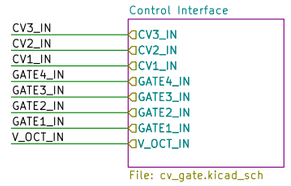

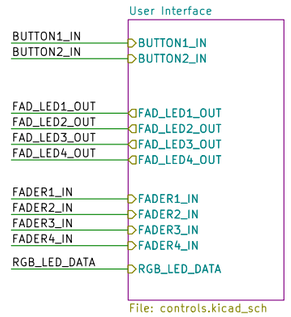

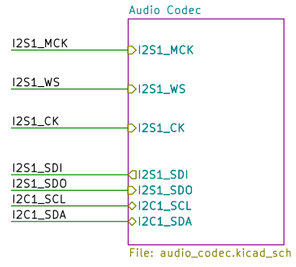

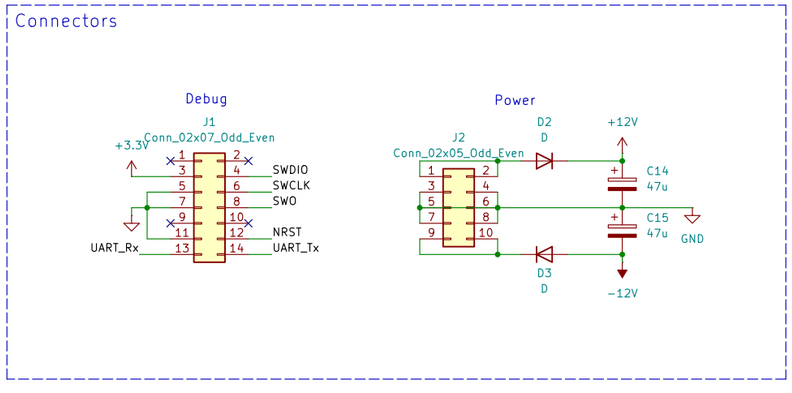

Bachelor Computer Science and Systems Engineering
TH Köln
Jonas Bengt Lux
Aware Modular

Sheet: /
File: aware01_h7_rev2_0.kicad_sch

Title: Aware 01 – Eurorack DSP Module

Size: A3	Date: 2026-03-28	Rev: 2
KiCad E.D.A. 10.0.0		Id: 1/5

User Interface

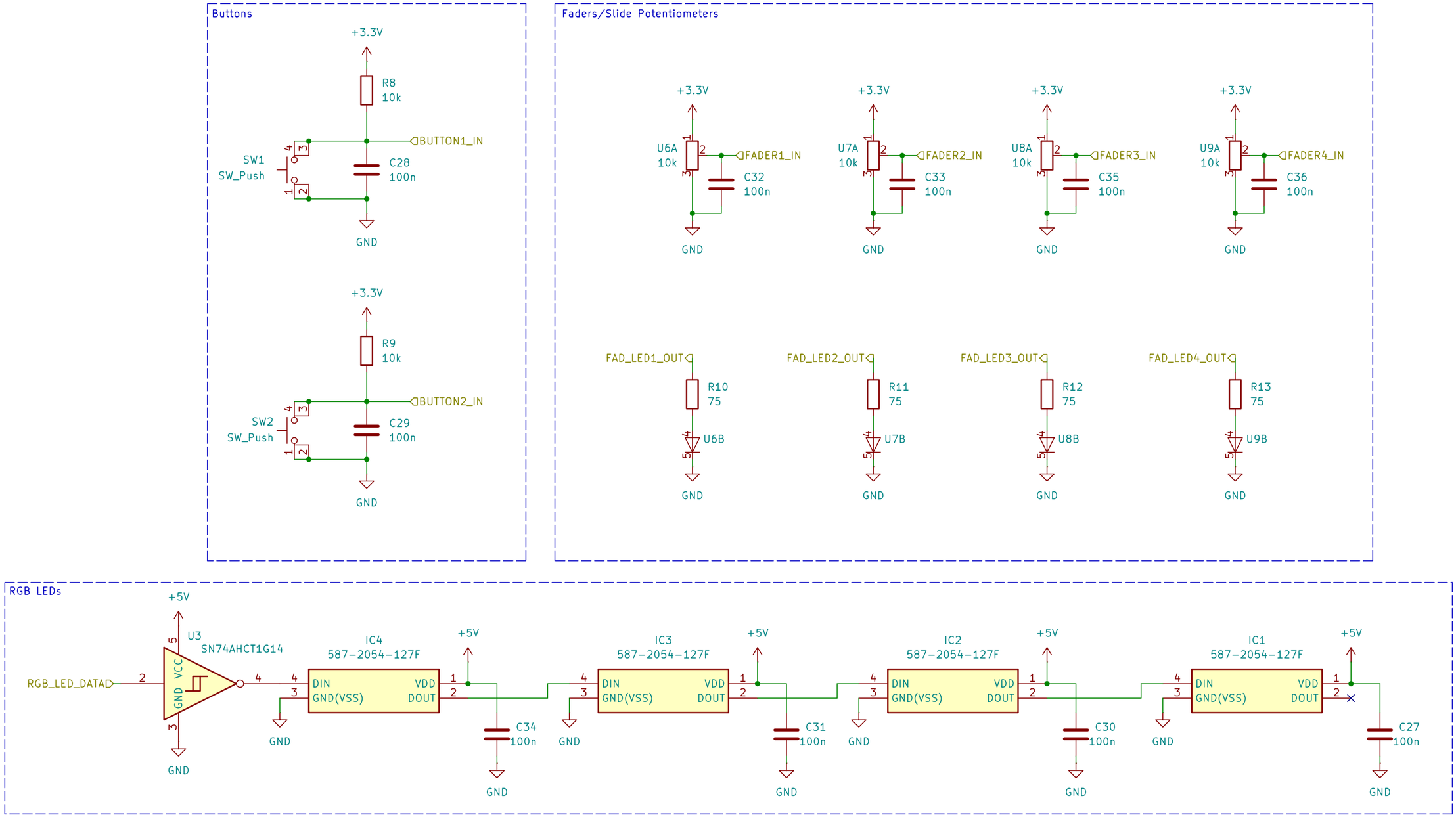

Bachelor Computer Science and Systems Engineering
TH Köln
Jonas Bengt Lux
Aware Modular

Sheet: /User Interface/
File: controls.kicad_sch

Title: Aware 01 – Eurorack DSP Module

Size: A4	Date: 2026-03-28	**Rev: 2**
KiCad E.D.A. 10.0.0		Id: 4/5

Audio Codec

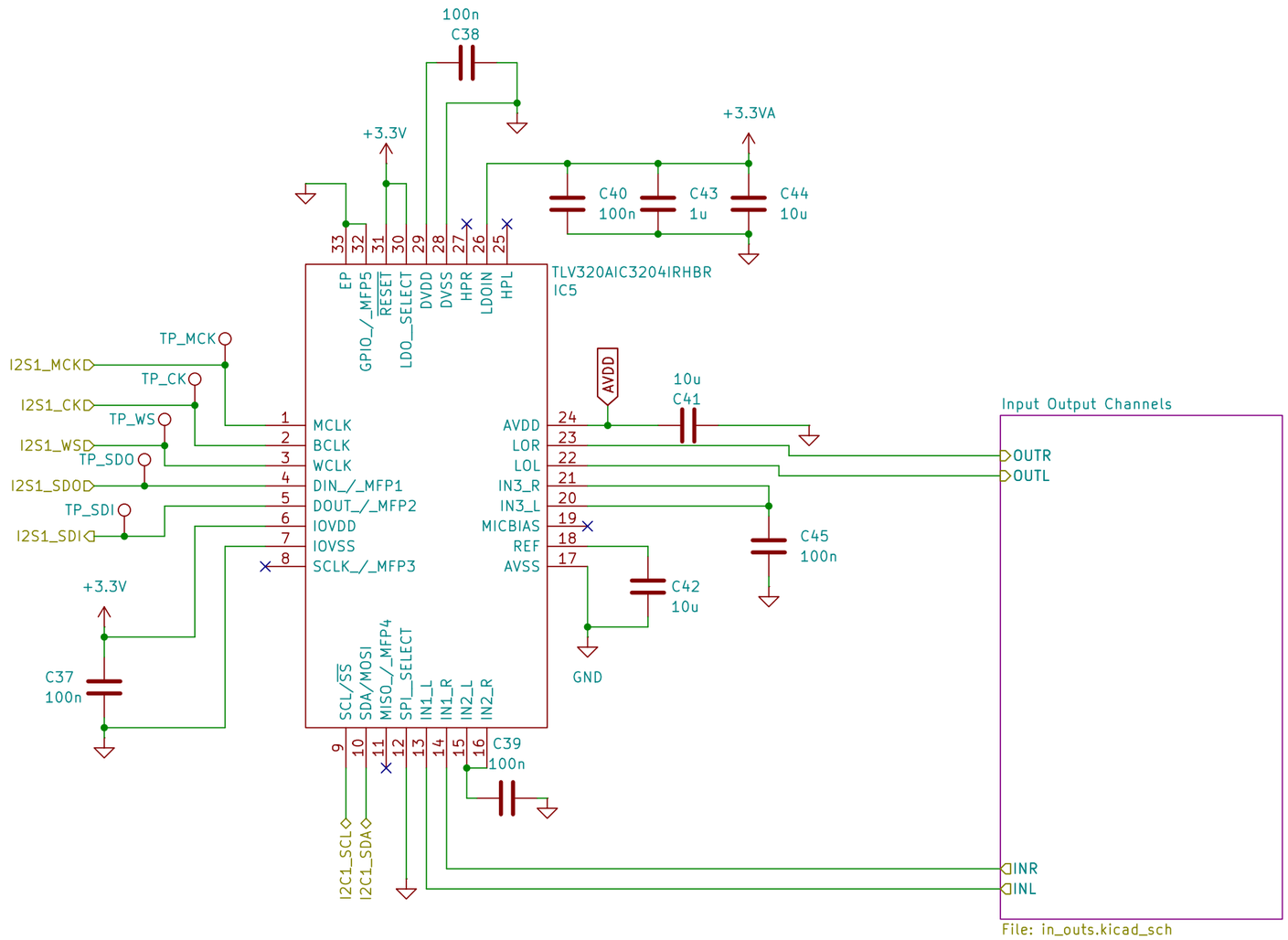

Bachelor Computer Science and Systems Engineering
TH Köln
Jonas Bengt Lux
Aware Modular

Sheet: /Audio Codec/
File: audio_codec.kicad_sch

Title: Aware 01 – Eurorack DSP Module

Size: A4	Date: 2026-03-28	**Rev: 2**
KiCad E.D.A. 10.0.0		Id: 7/5

In/Out Stages

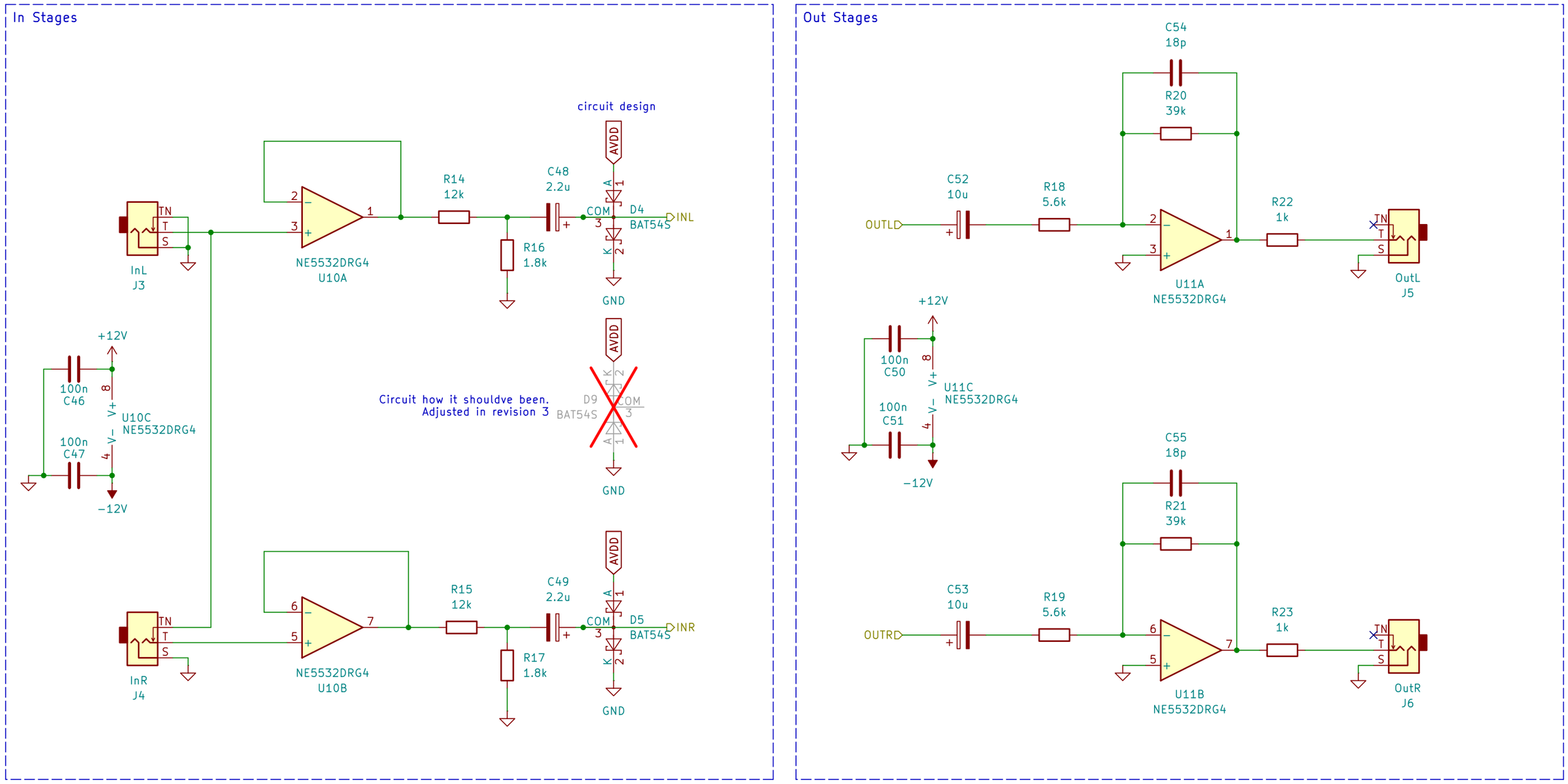

Bachelor Computer Science and Systems Engineering
TH Köln
Jonas Bengt Lux
Aware Modular

Sheet: /Audio Codec/Input Output Channels/
File: in_outs.kicad_sch

Title: Aarebot – Eurorack DSP Module

Size: A4	Date: 2026-03-28	**Rev: 2**
KiCad E.D.A. 10.0.0		Id: 8/5

Control Interface

Gate Inputs

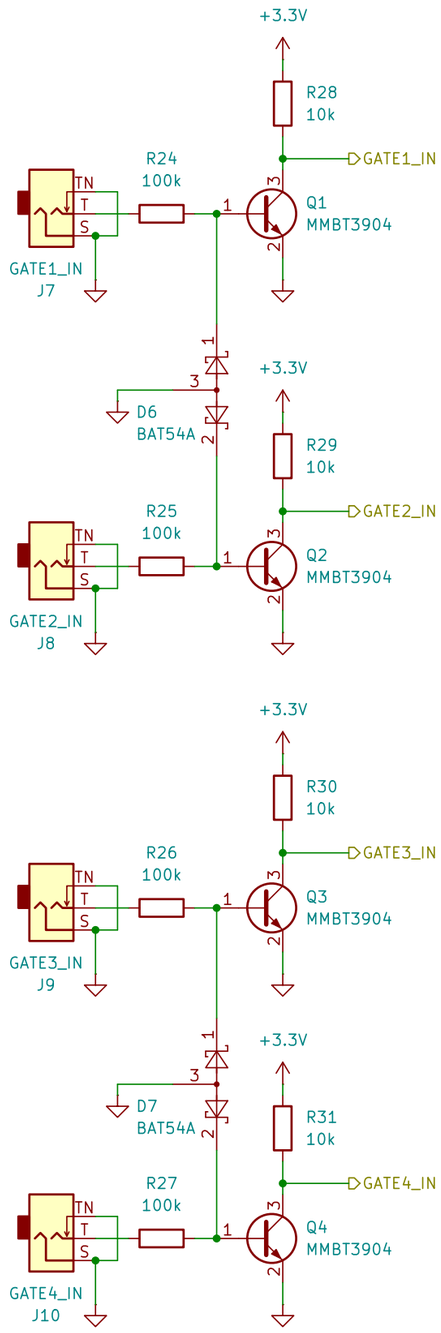

CV Inputs

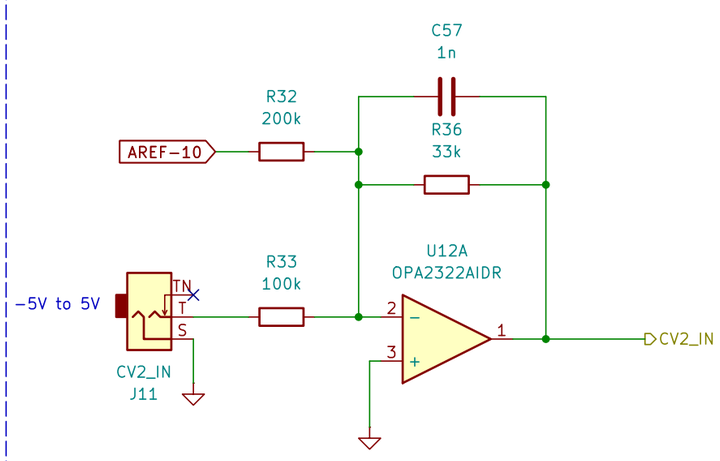

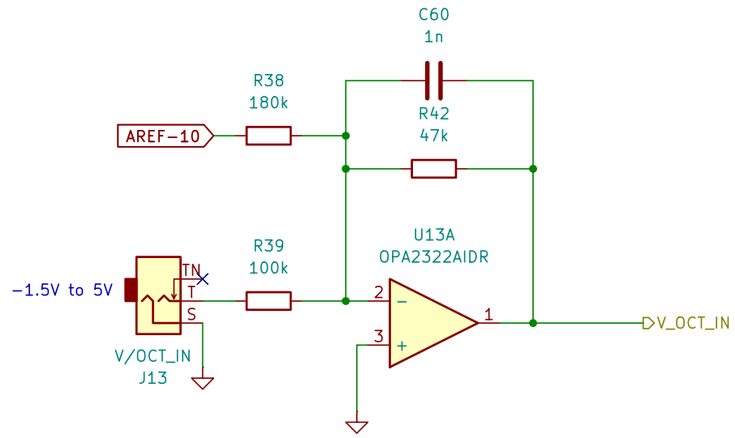

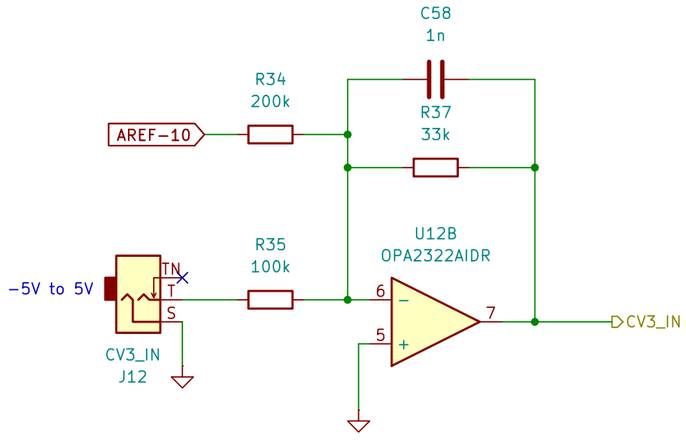

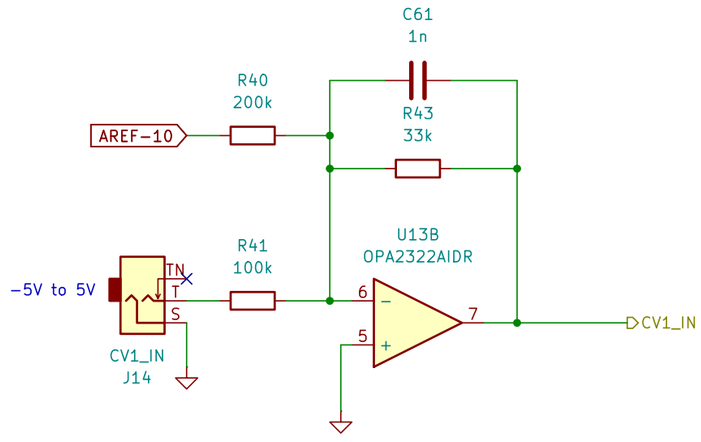

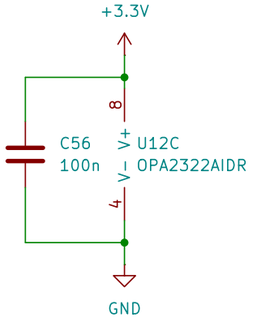

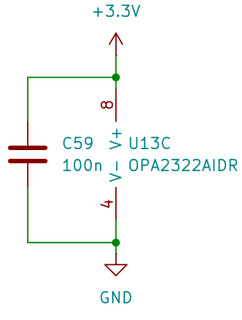

Bachelor Computer Science and Systems Engineering
TH Köln
Jonas Bengt Lux
Aware Modular

Sheet: /Control Interface/
File: cv_gate.kicad_sch

Title: Aware 01 – Eurorack DSP Module

Size: A4	Date: 2026-03-28	**Rev: 2**
KiCad E.D.A. 10.0.0		Id: 9/5