OUT Stage

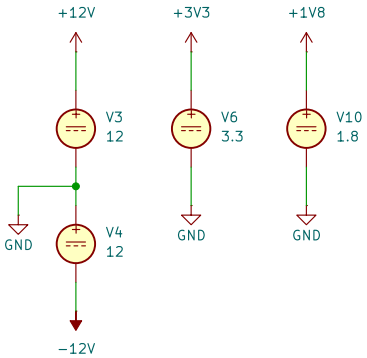

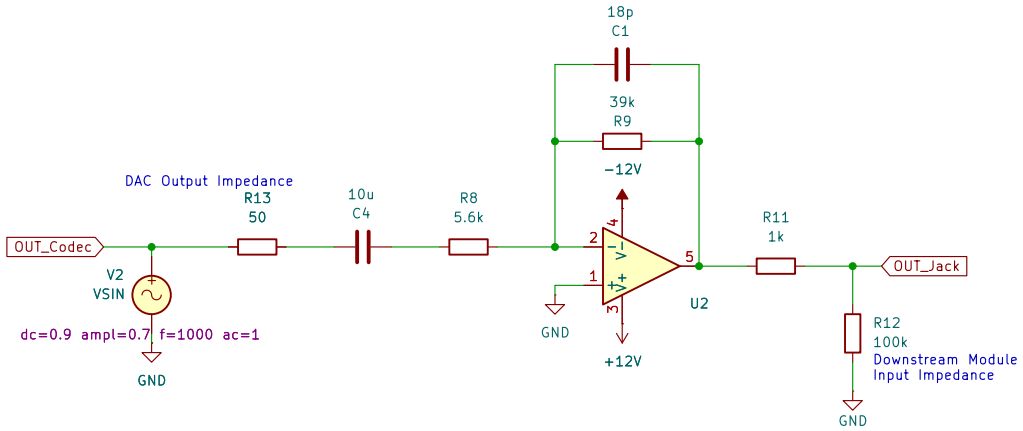

IN Stage

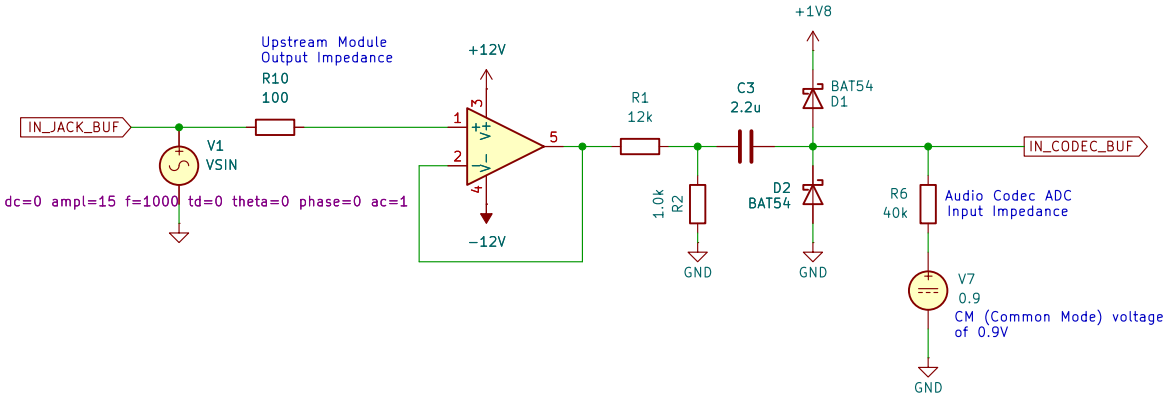

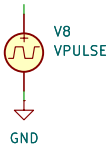

y1=0.2 y2=1.6 td=2n tr=2n tf=2n tw=0.5m per=1m ac=1

ADC absolute input limits:
Input pins must remain within −0.3 V to (A_VDD + 0.3 V).
Since A_VDD = 1.8 V
(generated by the TLV320AIC internal LDO),
the maximum allowed input voltage is 2.1 V.

Therefore a voltage divider of 1.8k/12k=0.15 is used to attenuate the signal.
The attenuation yields a peak voltage of 2.11V at −+10V input signal, which is just within the limits of the ADC.
Such high signals are usually not expected, since eurorack audio signals are within +−5V.