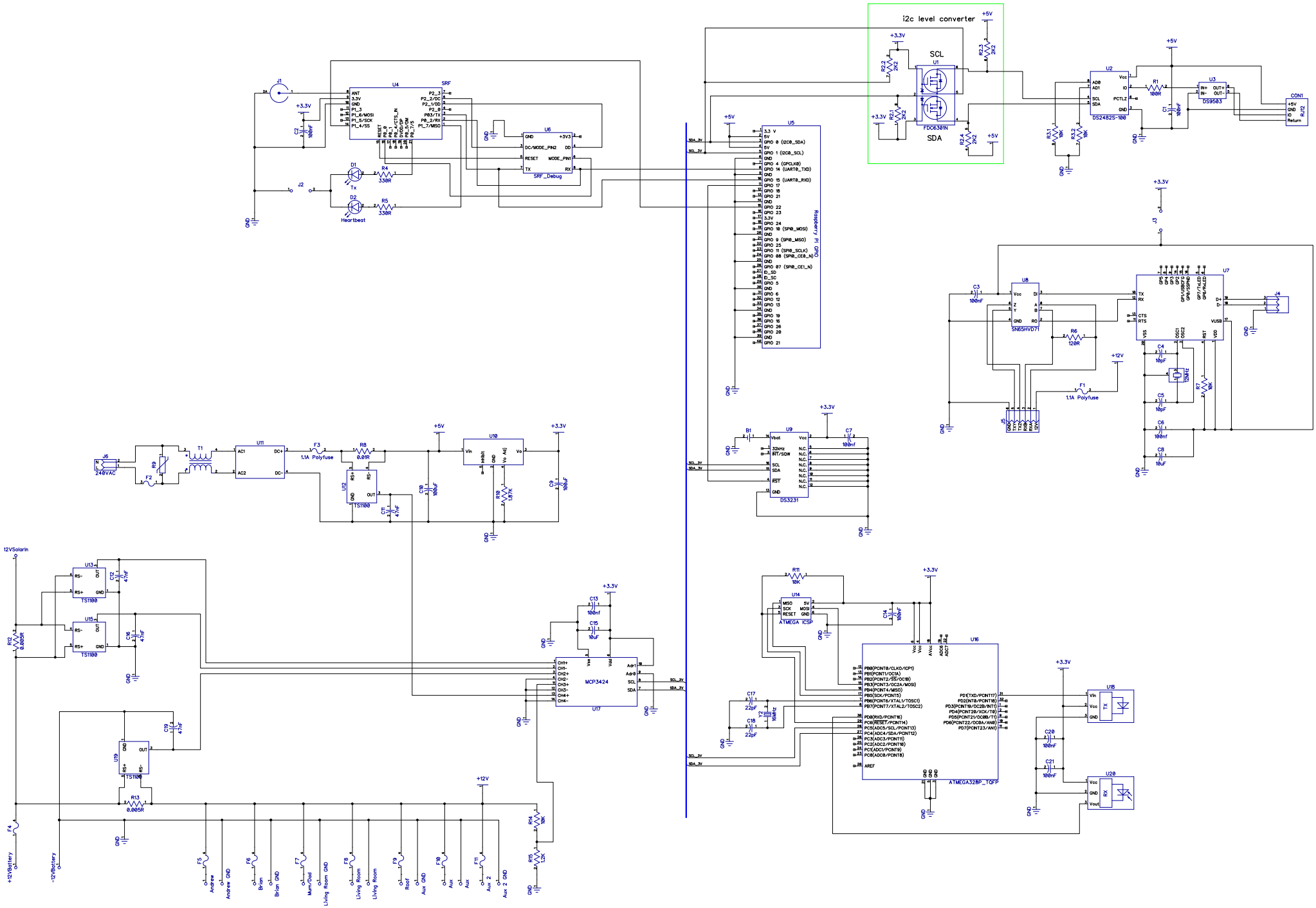
i2c level converter
SCL
SDA
FDC6301N
U1
U2
DS2482S-100
U3
DS9503
CON1
RJ12
U4
SRF
U6
SRF_Debug
U5
Raspberry Pi GPIO
U8
SN65HVD71
U7
J4
J5
U9
DS3231
B1
U10
U11
T1
J6
240VAC
F1
1.1A Polyfuse
F3
1.1A Polyfuse
U12
TS1100
U13
U15
U19
12VSolarin
R12
0.005R
R13
0.005R
U17
MCP3424
U14
ATMEGA ICSP
U16
ATMEGA328P_TQFP
U18
U20
+12V
+12VBattery
-12VBattery
Andrew
Andrew GND
Brian
Brian GND
Mum+Dad
Living Room GND
Living Room
Roof
Aux GND
Aux
Aux 2
Aux 2 GND
GND
+5V
+3.3V