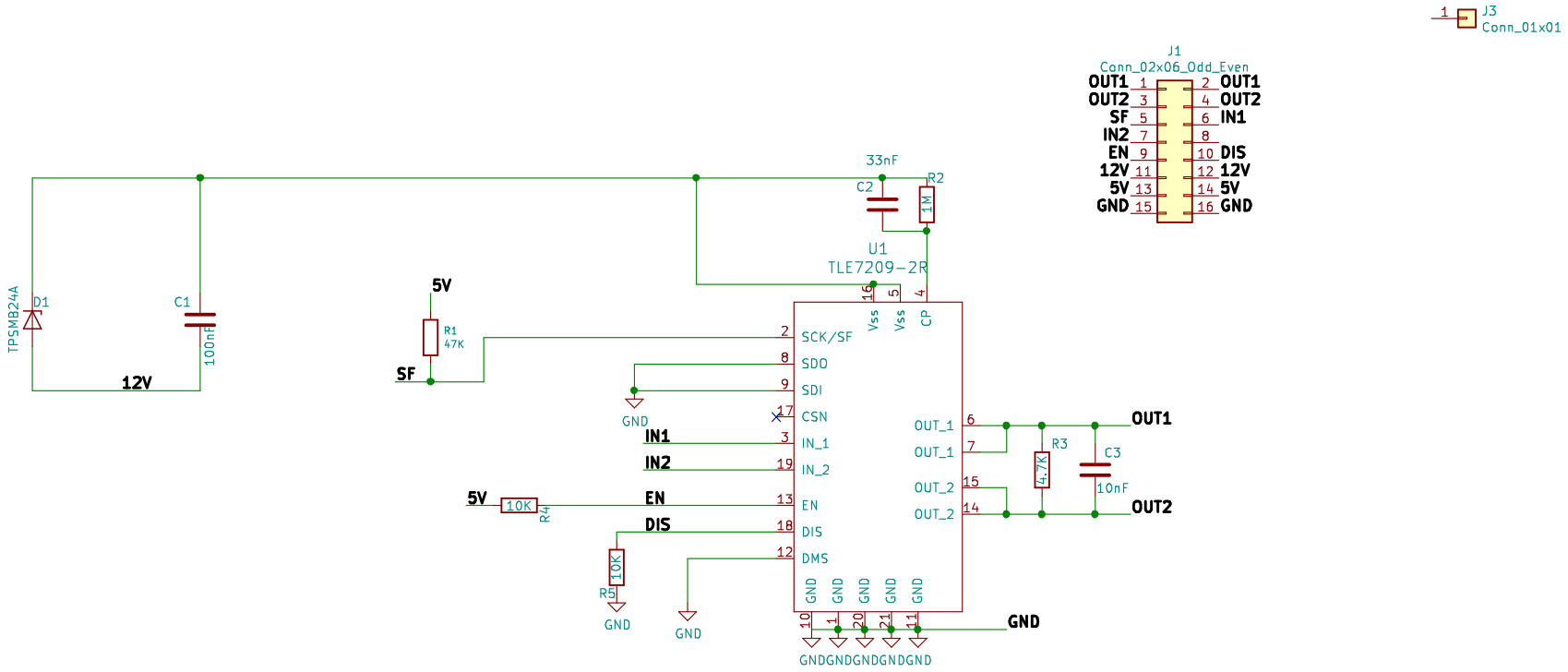


Sheet: /
File: TLE7209_Module.sch

**Title:**

| Size: A4 | Date: | Rev: |
|---|---|---|
| KiCad E.D.A. kicad (5.1.2)-2 | | Id: 1/1 |