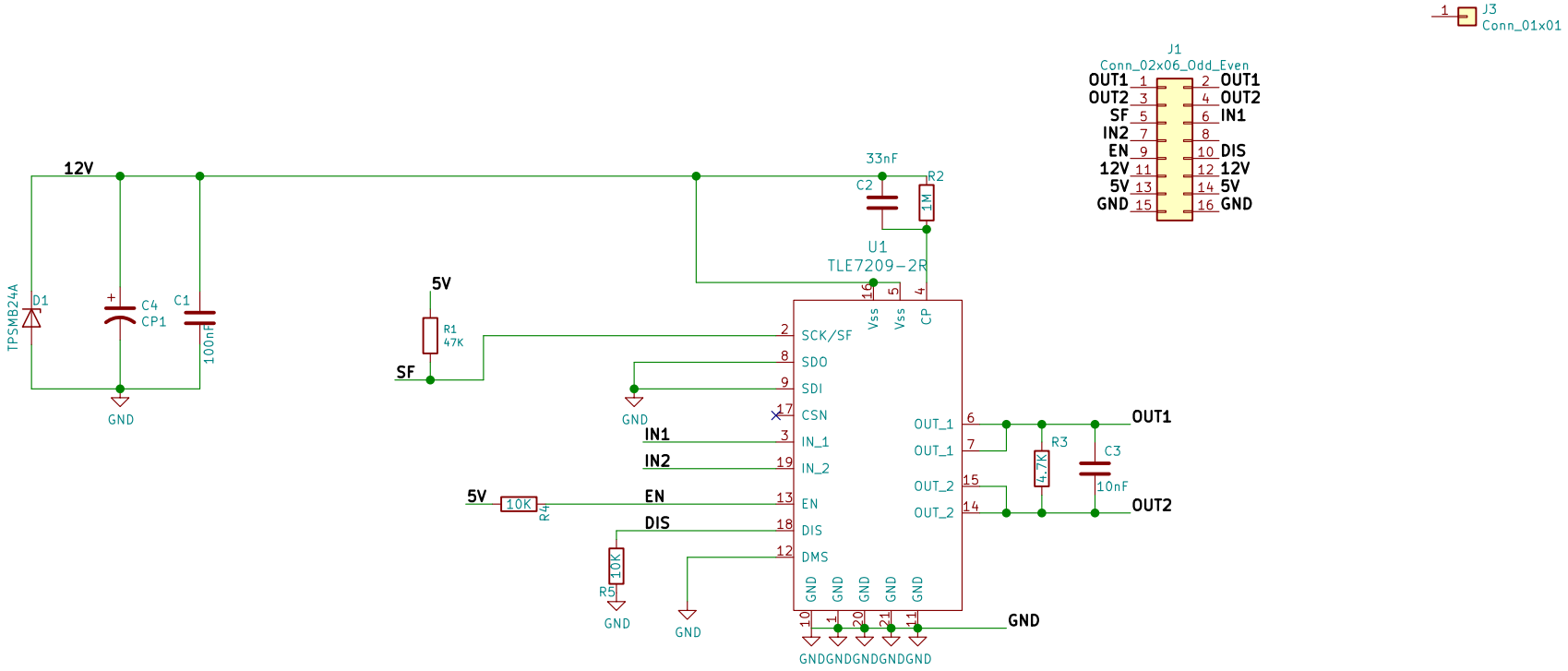

Sheet: /
File: TLE7209_Module.sch

Title:

Size: A4	Date:	Rev:
KiCad E.D.A. kicad (5.1.0-rc2-21-g16b3c80a7)		Id: 1/1