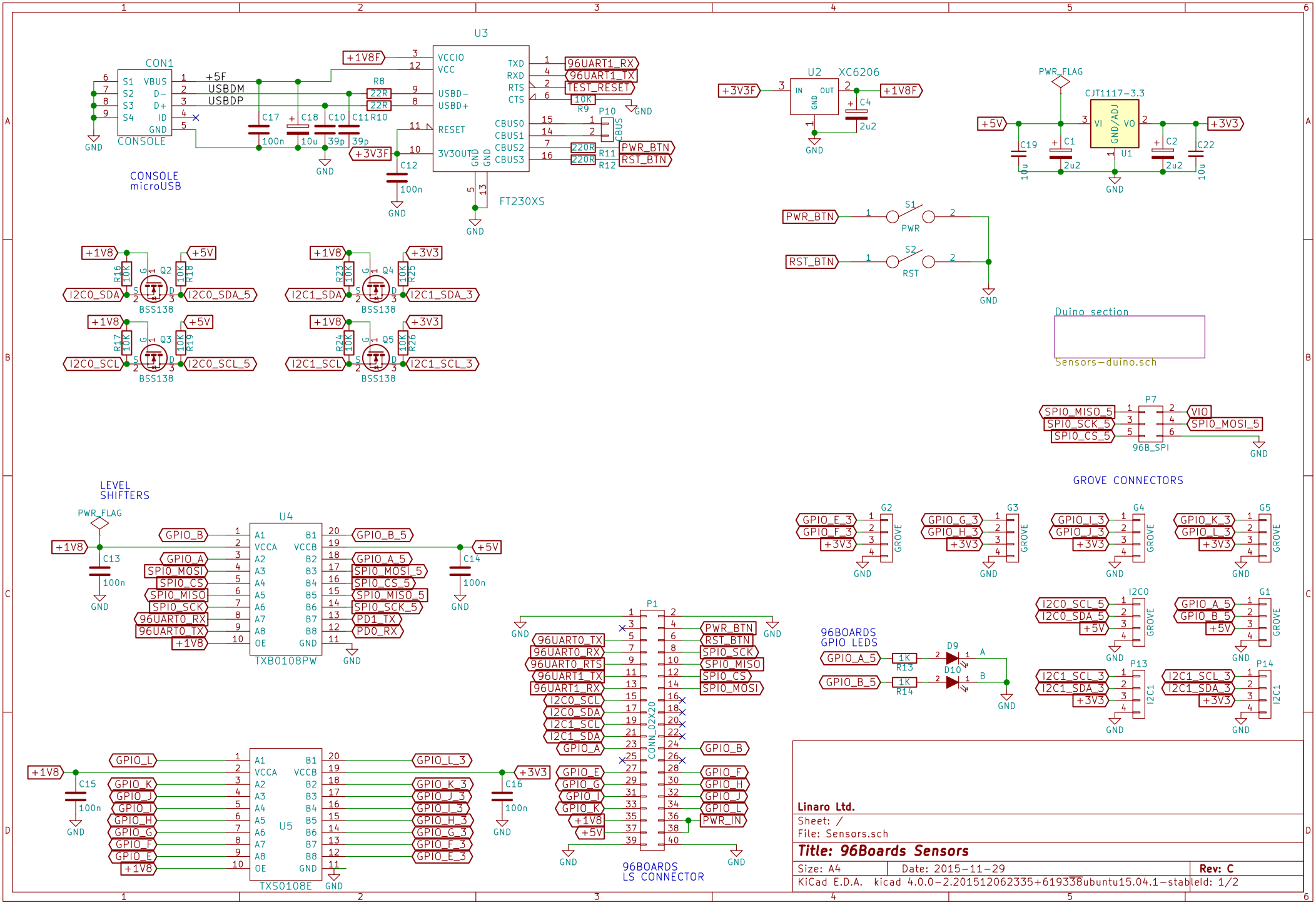
CON1
CONSOLE
CONSOLE
microUSB
U3
FT230XS
U2 XC6206
CJT1117-3.3
PWR_FLAG
S1
PWR
S2
RST
Duino section
Sensors-duino.sch
P7
96B_SPI
GROVE CONNECTORS
LEVEL
SHIFTERS
U4
TXB0108PW
U5
TXS0108E
P1
CONN_02X20
96BOARDS
LS CONNECTOR
96BOARDS
GPIO LEDS
Linaro Ltd.
Sheet: /
File: Sensors.sch
Title: 96Boards Sensors
Size: A4
Date: 2015-11-29
Rev: C
KiCad E.D.A. kicad 4.0.0-2.201512062335+619338ubuntu15.04.1-stable
Id: 1/2

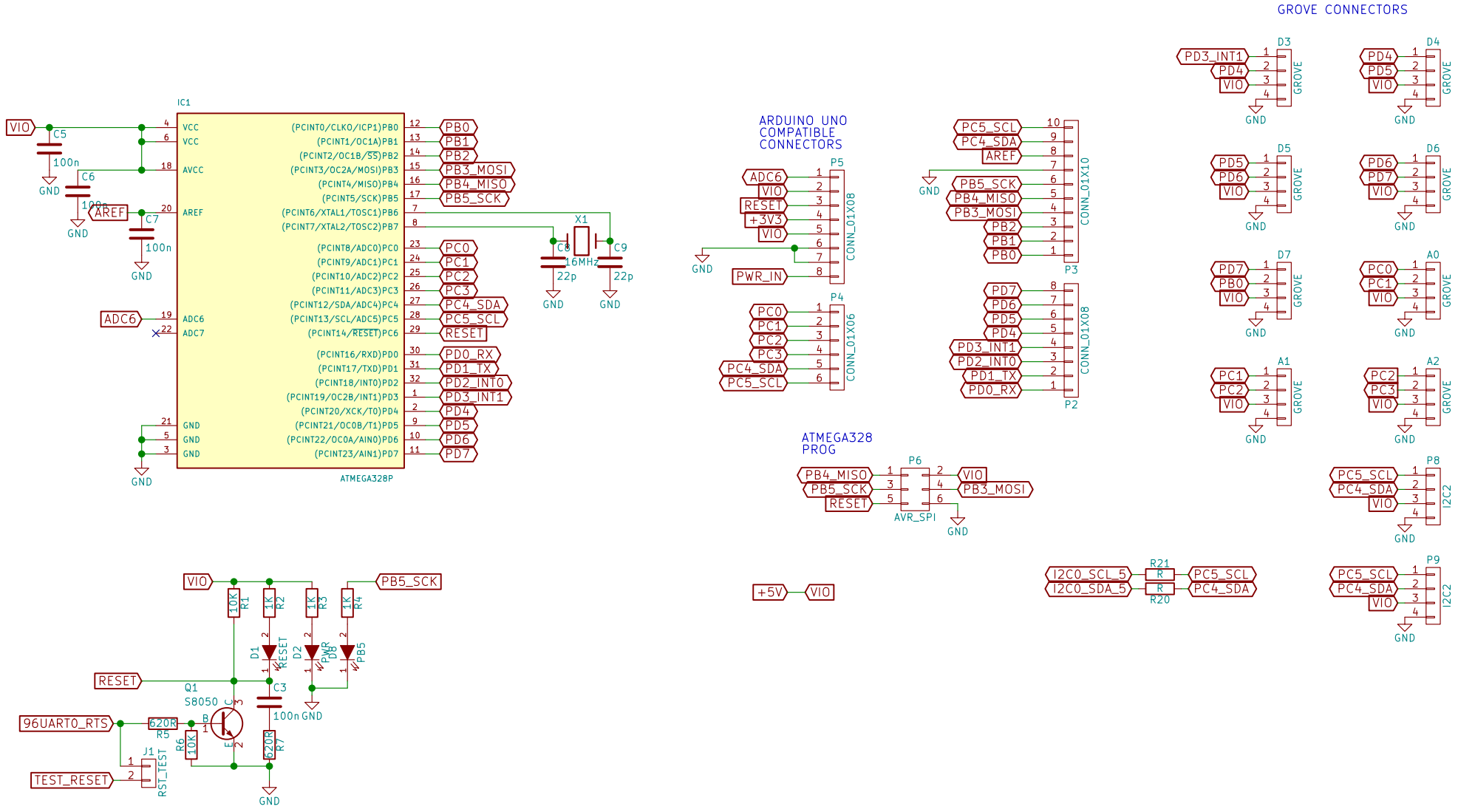

Linaro Ltd.

Sheet: /Duino section/

File: Sensors-duino.sch

Title: 96Boards Sensors

Size: A4	Date: 2015-11-29	Rev: C

KiCad E.D.A. kicad 4.0.0-2.201512062335+619338ubuntu15.04.1-stable Id: 2/2