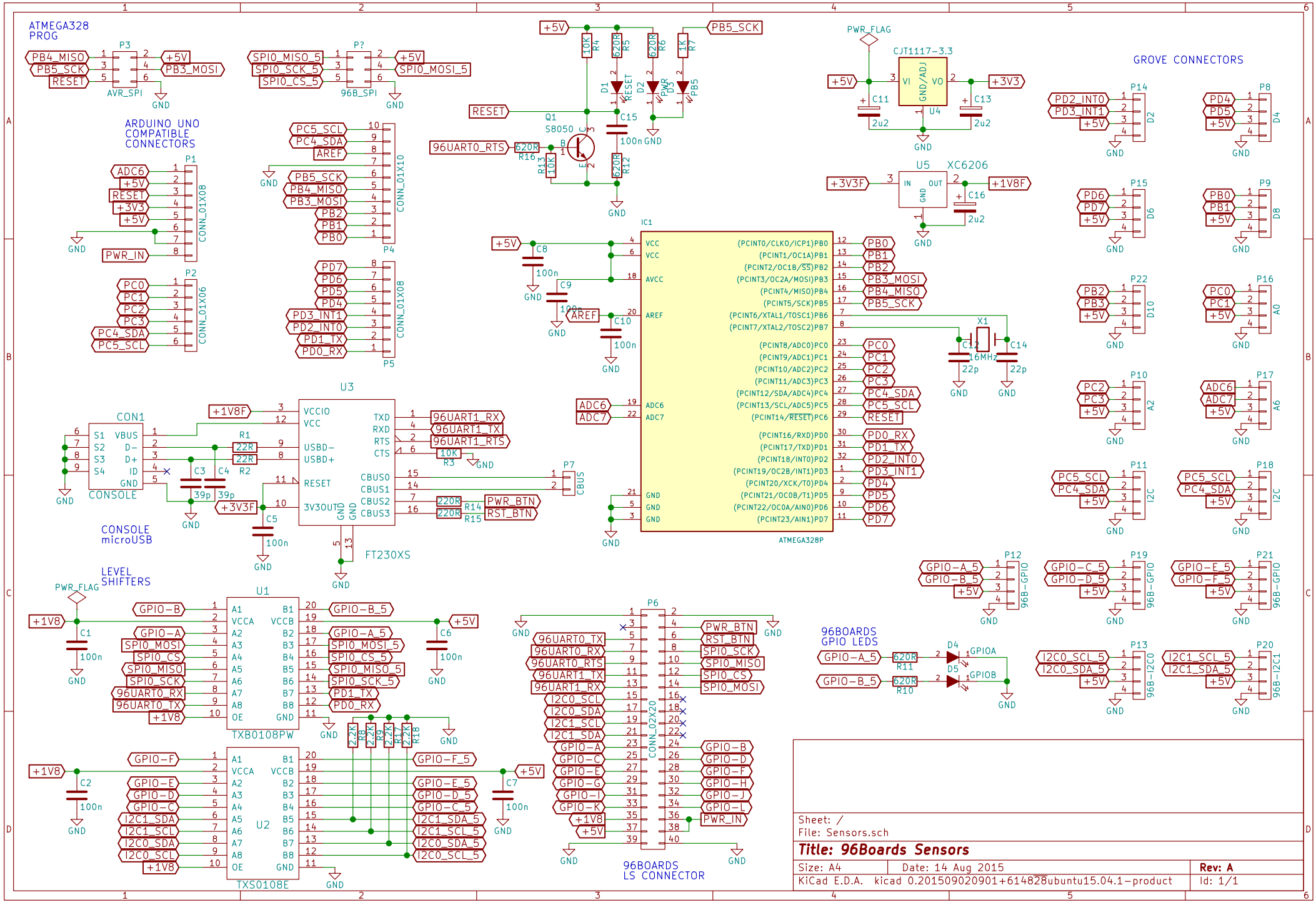
ATMEGA328 PROG
P3
PB4_MISO
PB5_SCK
RESET
+5V
PB3_MOSI
AVR_SPI
GND
P?
SPI0_MISO_5
SPI0_SCK_5
SPI0_CS_5
SPI0_MOSI_5
96B_SPI
ARDUINO UNO COMPATIBLE CONNECTORS
P1
ADC6
+3V3
PWR_IN
CONN_01X08
P2
PC0
PC1
PC2
PC3
PC4_SDA
PC5_SCL
CONN_01X06
PC5_SCL
PC4_SDA
AREF
PB5_SCK
PB4_MISO
PB3_MOSI
PB2
PB1
PB0
CONN_01X10
P4
PD7
PD6
PD5
PD4
PD3_INT1
PD2_INT0
PD1_TX
PD0_RX
CONN_01X08
P5
10K R4
620R R5
620R R6
1K R7
D1 RESET
D2 PWR
D3 PB5
RESET
Q1
S8050
C15
100n
96UART0_RTS
620R R16
10K R13
620R R12
PWR_FLAG
CJT1117-3.3
VI
VO
GND/ADJ
U4
C11 2u2
C13 2u2
+3V3
U5 XC6206
IN
OUT
GND
+3V3F
+1V8F
C16 2u2
IC1
VCC
AVCC
AREF
C8 100n
C9 100n
C10 100n
ADC6
ADC7
GND
(PCINT0/CLKO/ICP1)PB0
(PCINT1/OC1A)PB1
(PCINT2/OC1B/SS)PB2
(PCINT3/OC2A/MOSI)PB3
(PCINT4/MISO)PB4
(PCINT5/SCK)PB5
(PCINT6/XTAL1/TOSC1)PB6
(PCINT7/XTAL2/TOSC2)PB7
(PCINT8/ADC0)PC0
(PCINT9/ADC1)PC1
(PCINT10/ADC2)PC2
(PCINT11/ADC3)PC3
(PCINT12/SDA/ADC4)PC4
(PCINT13/SCL/ADC5)PC5
(PCINT14/RESET)PC6
(PCINT16/RXD)PD0
(PCINT17/TXD)PD1
(PCINT18/INT0)PD2
(PCINT19/OC2B/INT1)PD3
(PCINT20/XCK/T0)PD4
(PCINT21/OC0B/T1)PD5
(PCINT22/OC0A/AIN0)PD6
(PCINT23/AIN1)PD7
ATMEGA328P
X1 16MHz
C12 22p
C14 22p
GROVE CONNECTORS
P14 D2
P8 D4
P15 D6
P9 D8
P22 D10
P16 A0
P10 A2
P17 A6
P11 I2C
P18 I2C
P12 96B-GPIO
P19 96B-GPIO
P21 96B-GPIO
P13 96B-I2C0
P20 96B-I2C1
CON1
S1
S2
S3
S4
VBUS
D-
D+
ID
CONSOLE
R1 22R
R2 22R
C3 39p
C4 39p
CONSOLE microUSB
U3
VCCIO
VCC
USBD-
USBD+
RESET
3V30UT
TXD
RXD
RTS
CTS
CBUS0
CBUS1
CBUS2
CBUS3
96UART1_RX
96UART1_TX
96UART1_RTS
10K R3
P7 CBUS
220R R14
220R R15
PWR_BTN
RST_BTN
C5 100n
FT230XS
LEVEL SHIFTERS
PWR_FLAG
U1
TXB0108PW
A1
A2
A3
A4
A5
A6
A7
A8
OE
VCCA
B1
B2
B3
B4
B5
B6
B7
B8
VCCB
GND
+1V8
C1 100n
GPIO-B
GPIO-A
SPI0_MOSI
SPI0_CS
SPI0_MISO
SPI0_SCK
96UART0_RX
96UART0_TX
GPIO-B_5
GPIO-A_5
SPI0_MOSI_5
SPI0_CS_5
SPI0_MISO_5
SPI0_SCK_5
PD1_TX
PD0_RX
C6 100n
2.2K R8
2.2K R9
2.2K R17
2.2K R18
U2
TXS0108E
C2 100n
GPIO-F
GPIO-E
GPIO-D
GPIO-C
I2C1_SDA
I2C1_SCL
I2C0_SDA
I2C0_SCL
GPIO-F_5
GPIO-E_5
GPIO-D_5
GPIO-C_5
I2C1_SDA_5
I2C1_SCL_5
I2C0_SDA_5
I2C0_SCL_5
C7 100n
P6
CONN_02X20
96UART0_TX
96UART0_RX
96UART0_RTS
96UART1_TX
96UART1_RX
I2C0_SCL
I2C0_SDA
I2C1_SCL
I2C1_SDA
GPIO-A
GPIO-C
GPIO-E
GPIO-G
GPIO-I
GPIO-K
+1V8
+5V
PWR_BTN
RST_BTN
SPI0_SCK
SPI0_MISO
SPI0_CS
SPI0_MOSI
GPIO-B
GPIO-D
GPIO-F
GPIO-H
GPIO-J
GPIO-L
PWR_IN
96BOARDS LS CONNECTOR
96BOARDS GPIO LEDS
GPIO-A_5
GPIO-B_5
620R R11
620R R10
D4 GPIOA
D5 GPIOB
Sheet: /
File: Sensors.sch
Title: 96Boards Sensors
Size: A4
Date: 14 Aug 2015
Rev: A
KiCad E.D.A. kicad 0.201509020901+614828ubuntu15.04.1-product
Id: 1/1