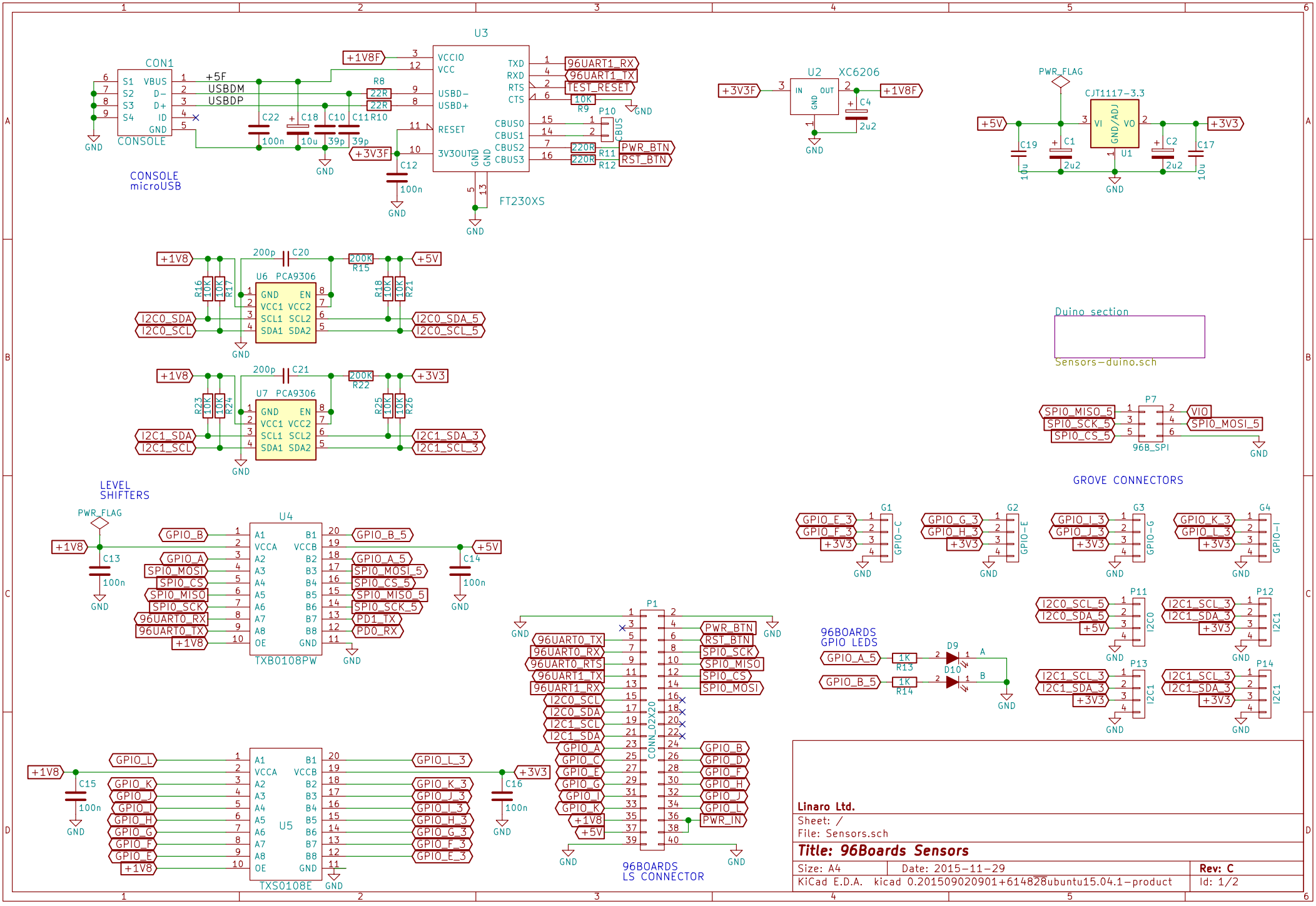
CON1
CONSOLE
CONSOLE microUSB
U3
FT230XS
U2 XC6206
PWR_FLAG
CJT1117-3.3
U1
U6 PCA9306
U7 PCA9306
LEVEL SHIFTERS
U4
TXB0108PW
U5
TXS0108E
Duino section
Sensors-duino.sch
P7
96B_SPI
GROVE CONNECTORS
96BOARDS GPIO LEDS
P1
CONN_02X20
96BOARDS LS CONNECTOR
Linaro Ltd.
Sheet: /
File: Sensors.sch
Title: 96Boards Sensors
Size: A4
Date: 2015-11-29
Rev: C
KiCad E.D.A. kicad 0.201509020901+614828ubuntu15.04.1-product
Id: 1/2

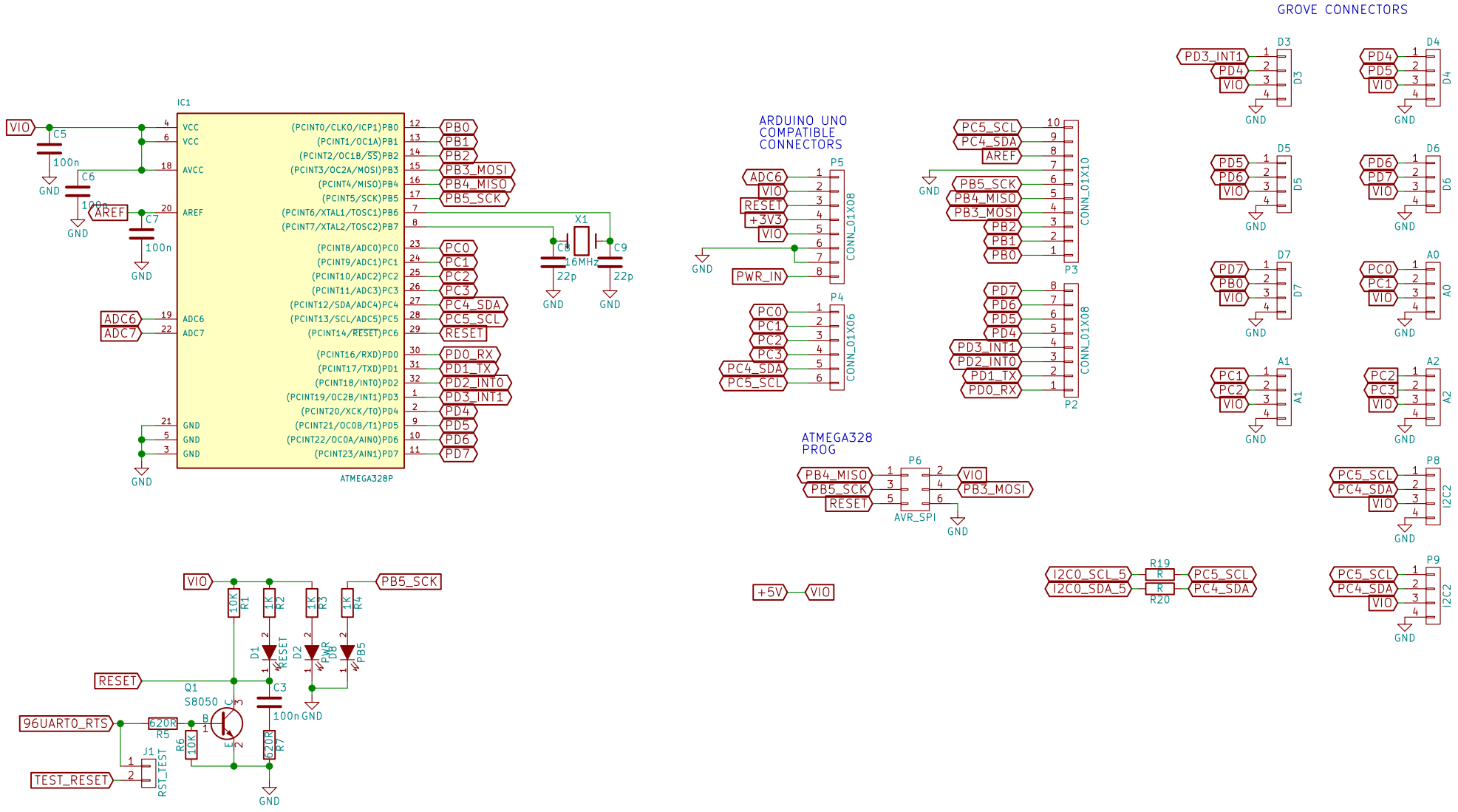

Linaro Ltd.

Sheet: /Duino section/

File: Sensors-duino.sch

Title: 96Boards Sensors

Size: A4	Date: 2015-11-29	Rev: C
KiCad E.D.A. kicad 0.201509020901+614828ubuntu15.04.1-product		Id: 2/2