WinLink E850-96 Board

Table of Contents

P01. COVER
P02. E850 #1 (CONTROL/PERI)
P03. E850 #2 (USB/MSH/MMC/MIPI)
P04. E850 #3 (WiFi/BT)
P05. E850 #4 (DRAM/POWERS/VSS)
P06. PMIC (S2MPU12)
P07. EXT-POWER/USB/KEY
P08. POWER DISTRIBUTION
P09. HDMI/MIPI
P10. eMCP/T-FLASH
P11. WiFi/BT
P12. AUDIO/CAMERA Extension
P13. HS & LS Connectors
P14. USB Power and Ethernet
P15. USB Combo (LAN9514)
P16. NPU (SPR5801S)
P17. Revision History
P18. PCB Layout
P19. PCB Layout

Revision	Date	Description

Title	WinLink E850-96 Board	
Size: A3	Document Number: COVER	Rev: 0
Date: Thursday, August 19, 2021	Sheet 1 of 19	

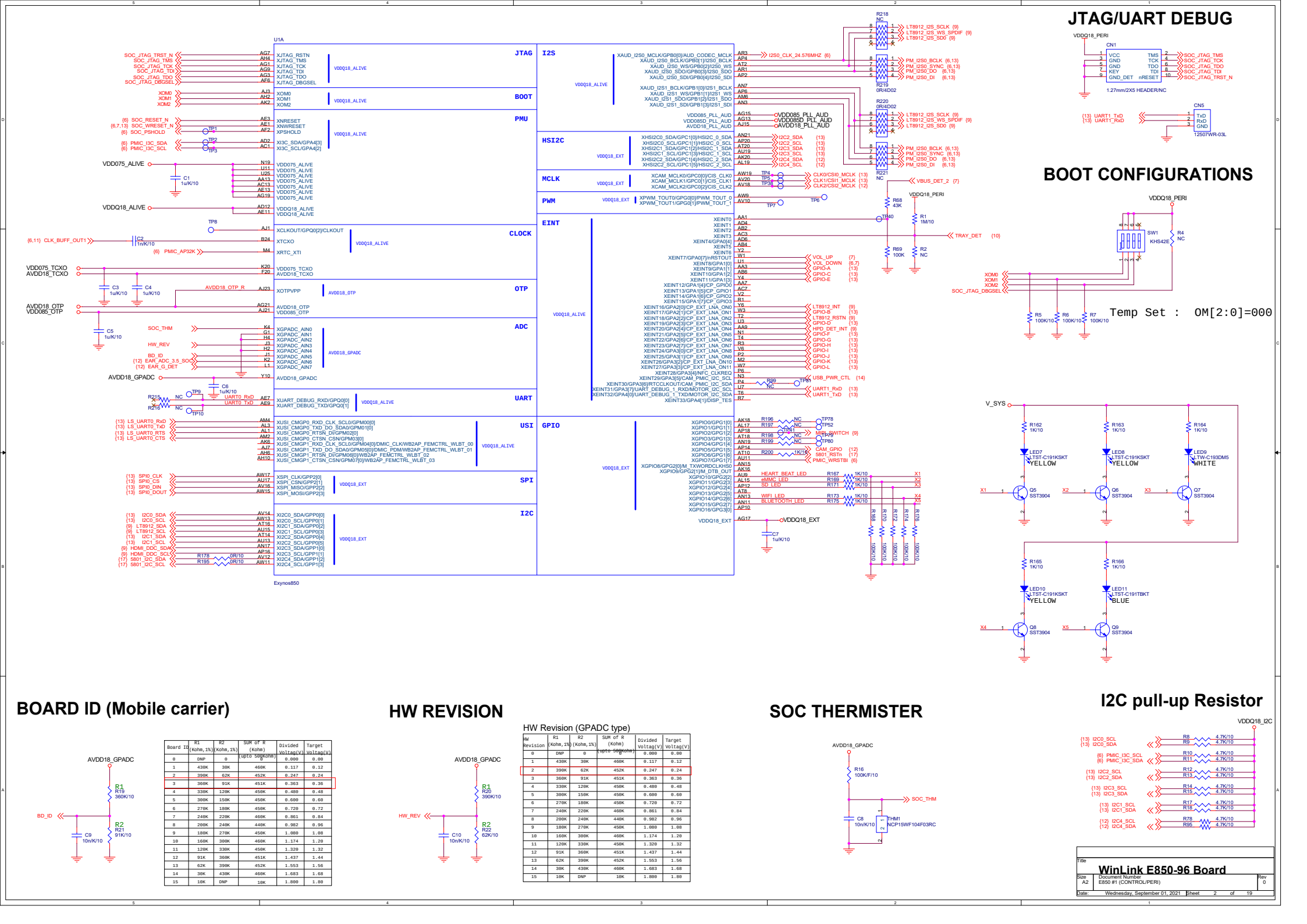

HW Revision (GPADC type)

HW Revision	R1 (Kohm,1%)	R2 (Kohm,1%)	SUM of R (Kohm) (upto 500Kohm)	Divided Voltag(V)	Target Voltag(V)
0	DNP	0	0	0.000	0.00
1	430K	30K	460K	0.117	0.12
2	390K	62K	452K	0.247	0.24
3	360K	91K	451K	0.363	0.36
4	330K	120K	450K	0.480	0.48
5	300K	150K	450K	0.600	0.60
6	270K	180K	450K	0.720	0.72
7	240K	220K	460K	0.861	0.84
8	200K	240K	440K	0.982	0.96
9	180K	270K	450K	1.080	1.08
10	160K	300K	460K	1.174	1.20
11	120K	330K	450K	1.320	1.32
12	91K	360K	451K	1.437	1.44
13	62K	390K	452K	1.553	1.56
14	30K	430K	460K	1.683	1.68
15	10K	DNP	10K	1.800	1.80

Title	WinLink E850-96 Board		
Size A2	Document Number E850 #1 (CONTROL/PERI)		Rev 0
Date: Wednesday, September 01, 2021	Sheet 2	of 19	

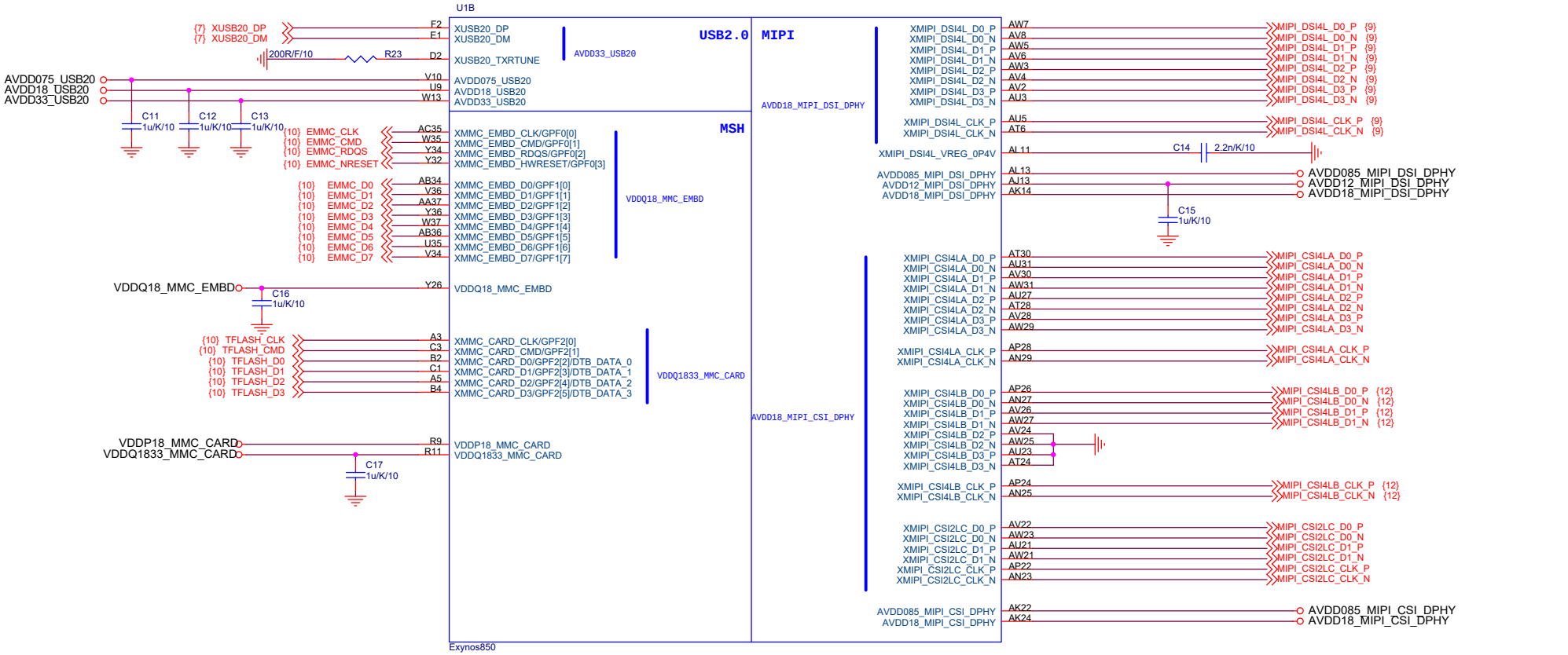

Title	**WinLink E850-96 Board**	
Size: A3	Document Number: E850 #2 (USB/MSH/MMC/MIPI)	Rev: 0
Date: Thursday, August 19, 2021	Sheet 3 of 19	

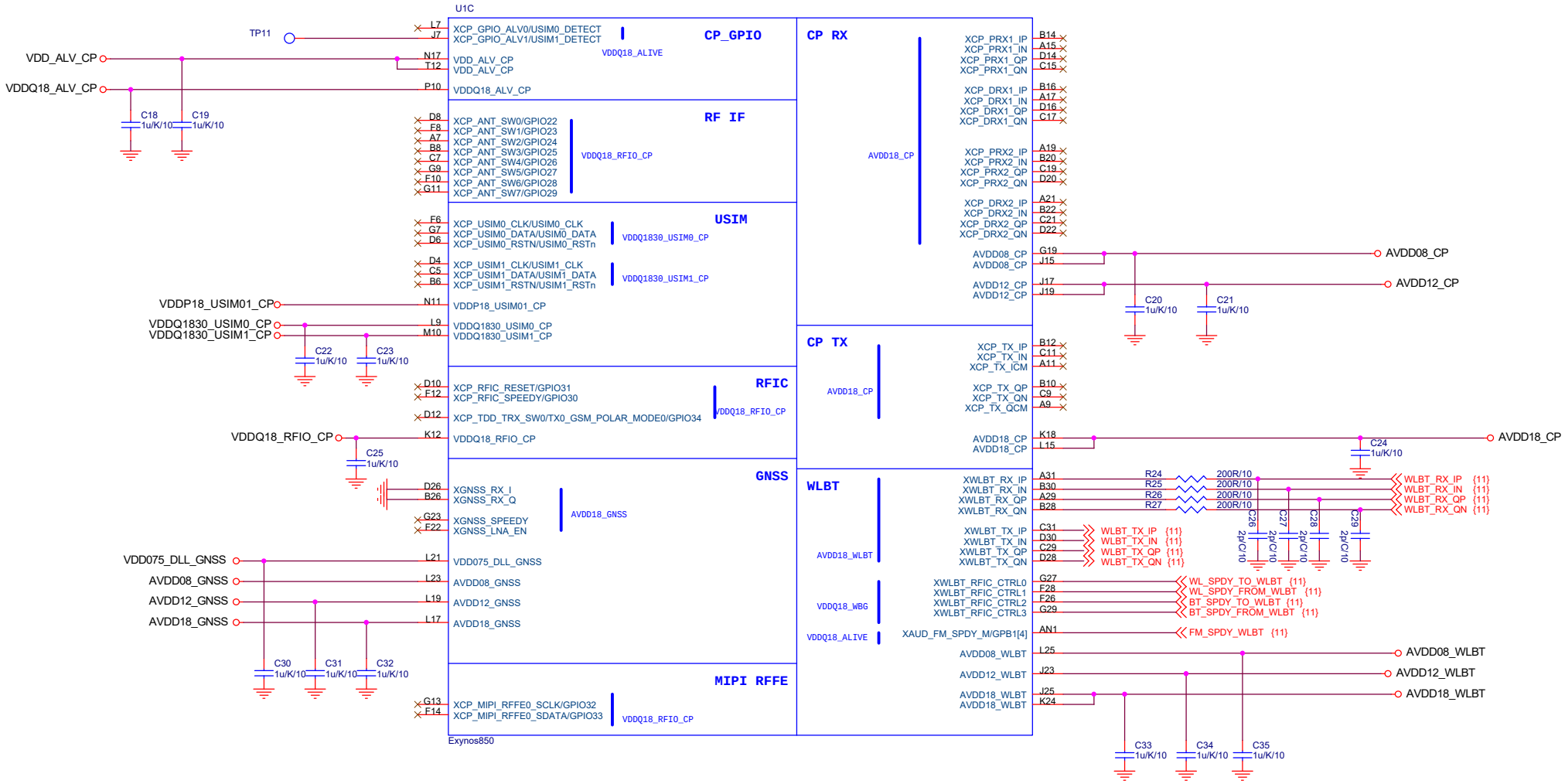

Title	**WinLink E850-96 Board**	
Size A3	Document Number E850 #3 (WiFi/BT)	Rev 0
Date: Thursday, August 19, 2021	Sheet 4 of 19	

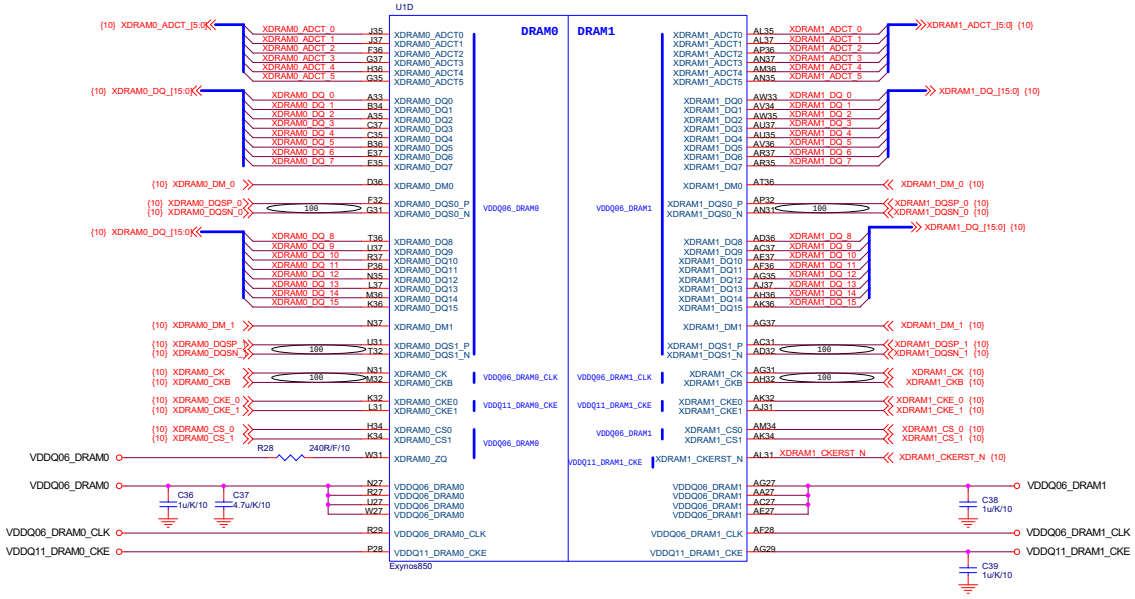

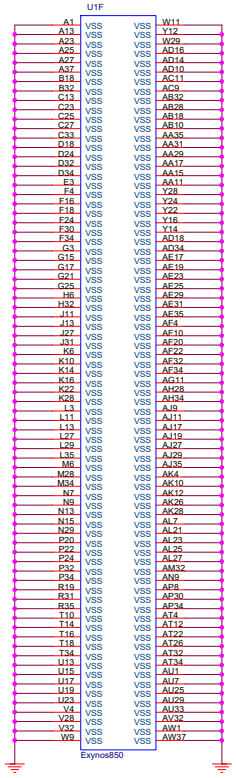

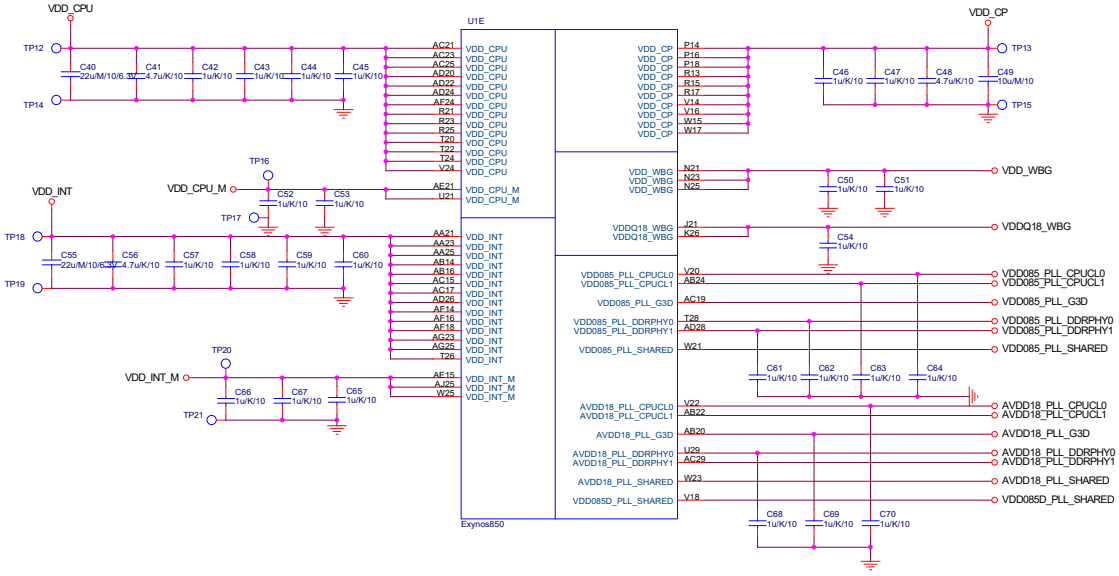

Title	WinLink E850-96 Board		
Size A2	Document Number E850 #4 (DRAM/POWERS/VSS)		Rev 0
Date: Thursday, August 19, 2021	Sheet 5 of 19		

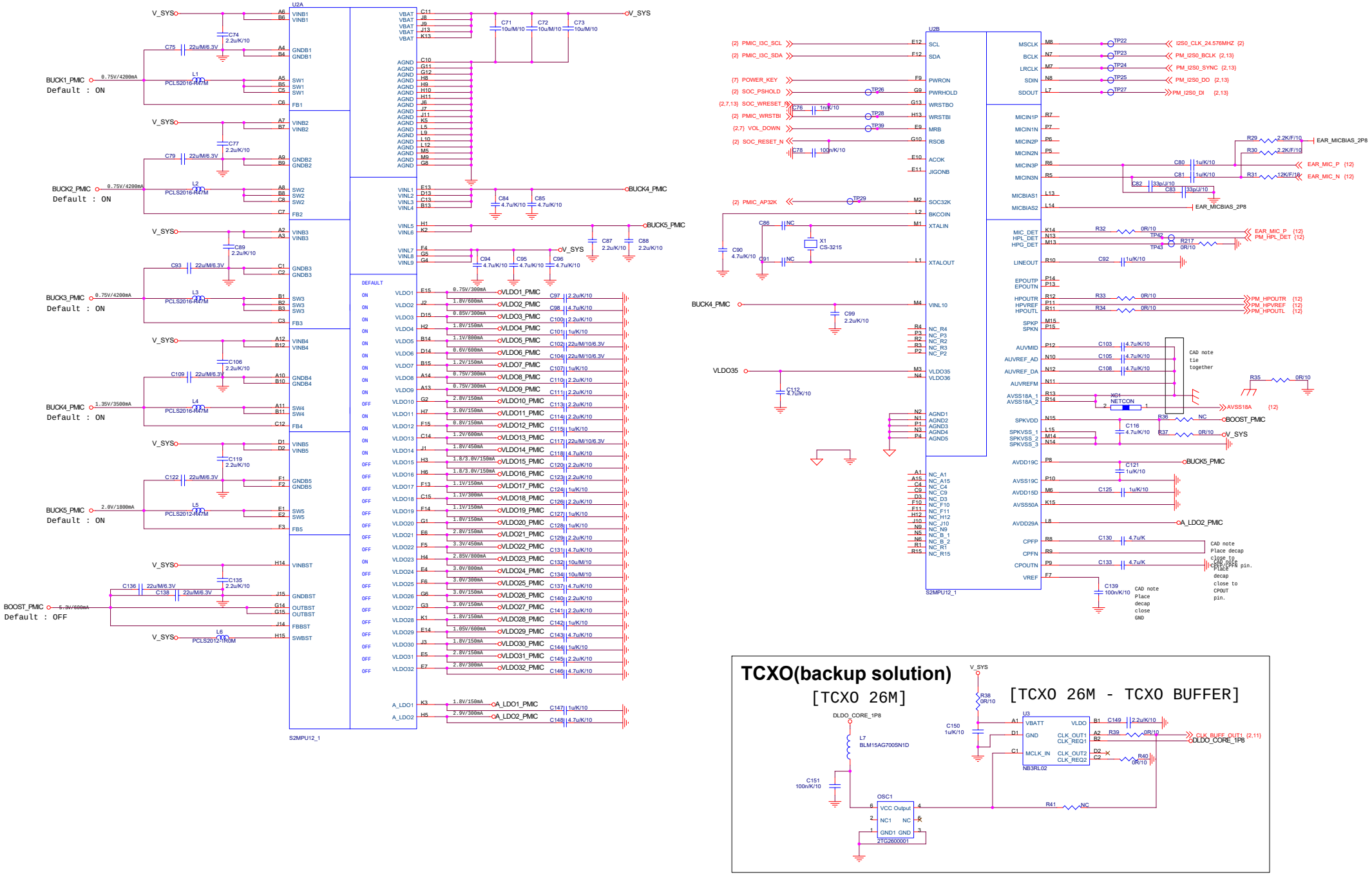

TCXO(backup solution)

Title	WinLink E850-96 Board		
Size A2	Document Number PMIC(S2MPU12)		Rev 0
Date: Thursday, August 19, 2021	Sheet 6 of 19		

DC-IN TO V_SYS(5V)

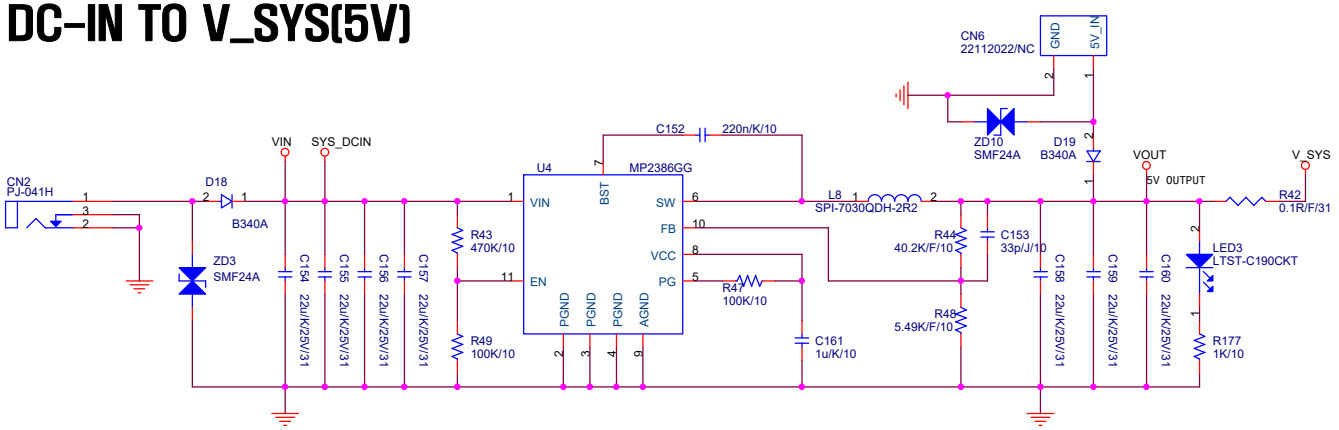

V_SYS TO NPU POWER

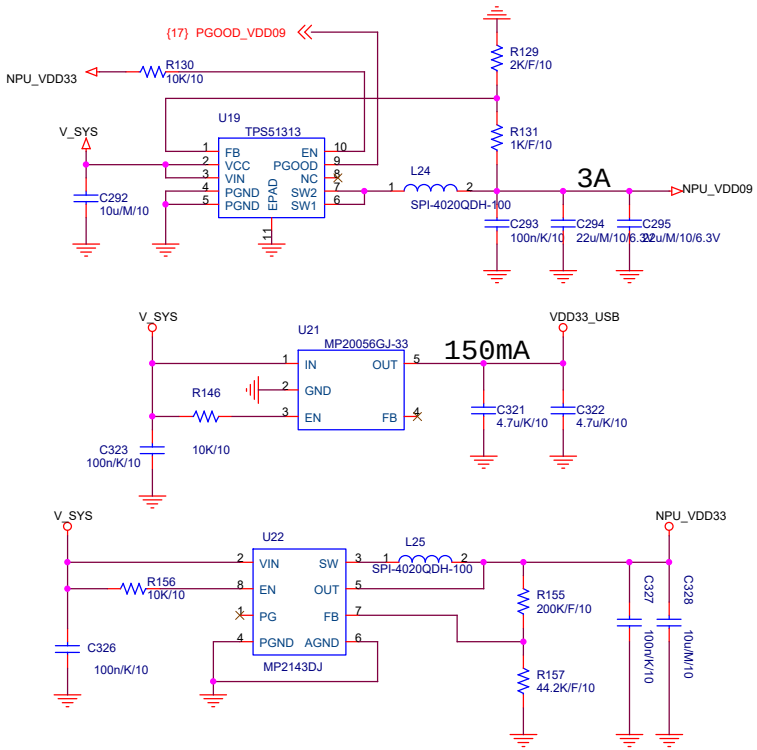

MICRO USB Connector/USB MUX

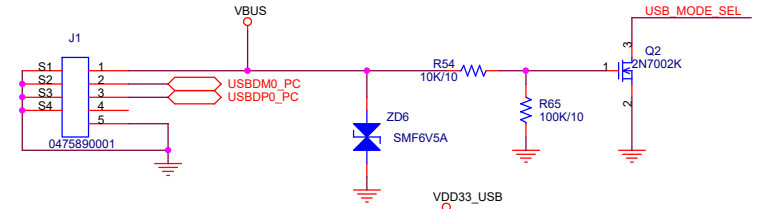

VBUS	VBUS_DET2	USB_MODE_SEL	
High	Low	Low	D=1D
Low	High	High	D=2D

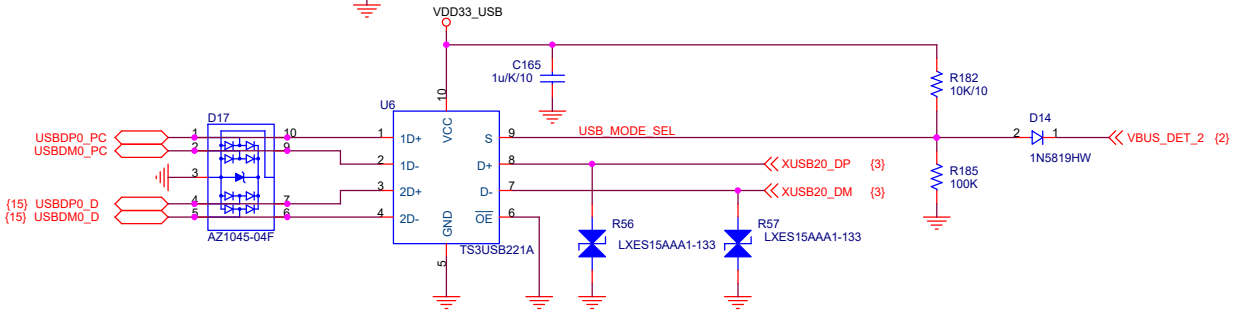

POWER KEY

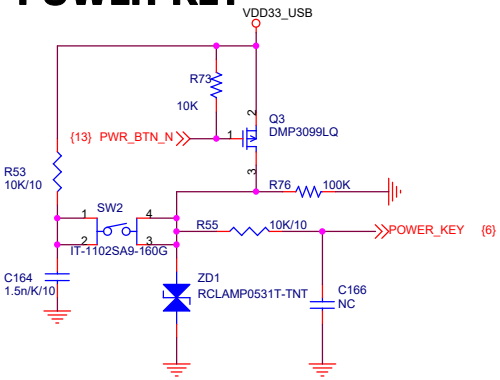

RESET KEY

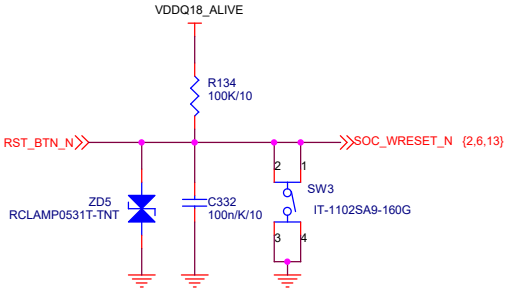

VOLUME KEY

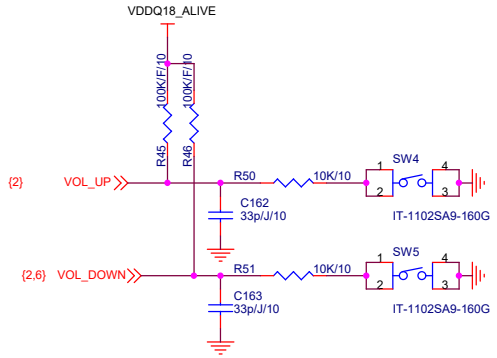

Title	WinLink E850-96 Board		
Size A3	Document Number EXT-POWER/USB/KEY		Rev 0
Date: Thursday, August 19, 2021		Sheet 7 of 19	

SYSTEM Power

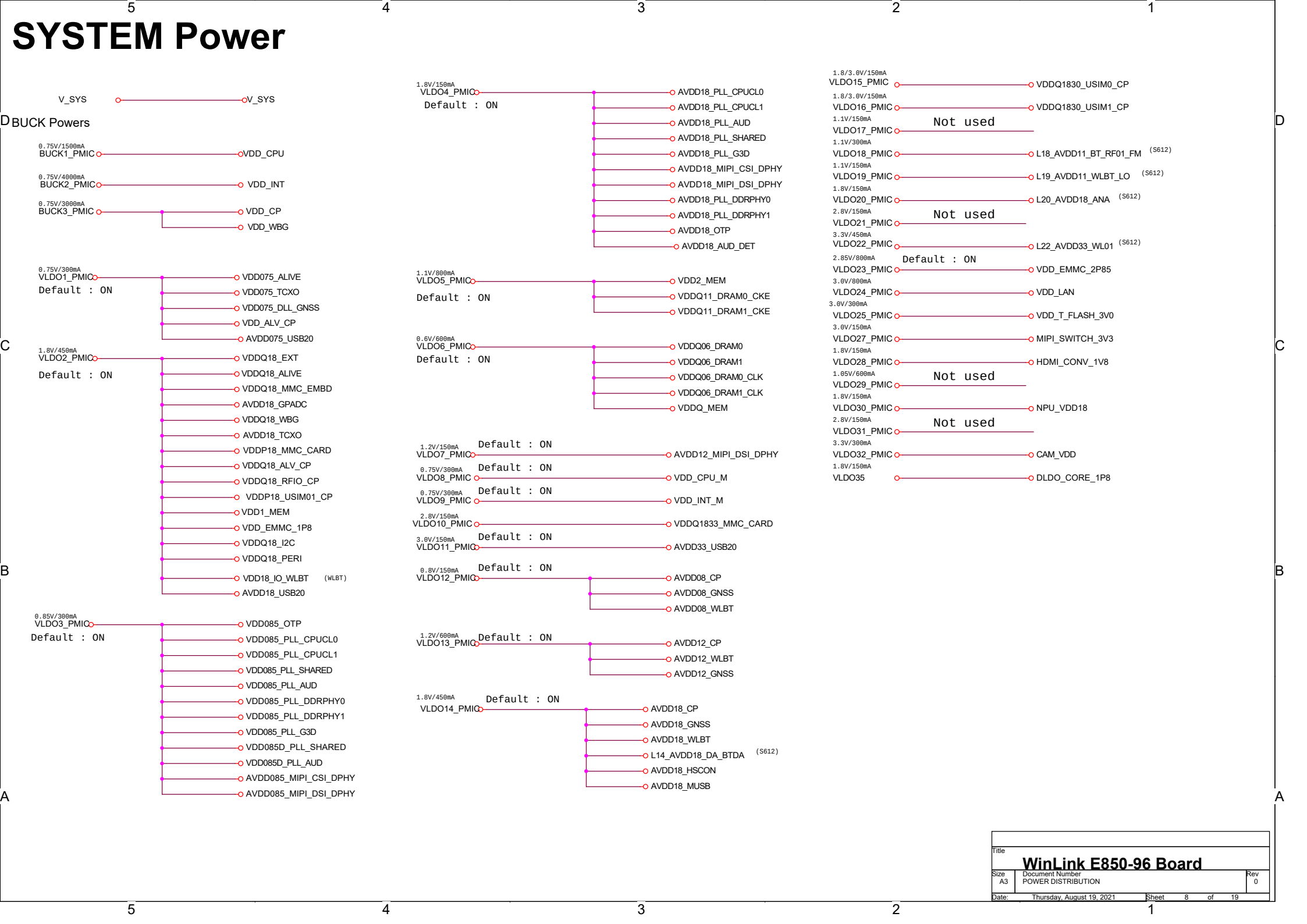

Title	WinLink E850-96 Board	
Size A3	Document Number POWER DISTRIBUTION	Rev 0
Date: Thursday, August 19, 2021	Sheet 8 of 19	

MIPI_DSI

MIPI_SWITCH

LOW : MIPI Conn.
HIGH : HDMI Conn.

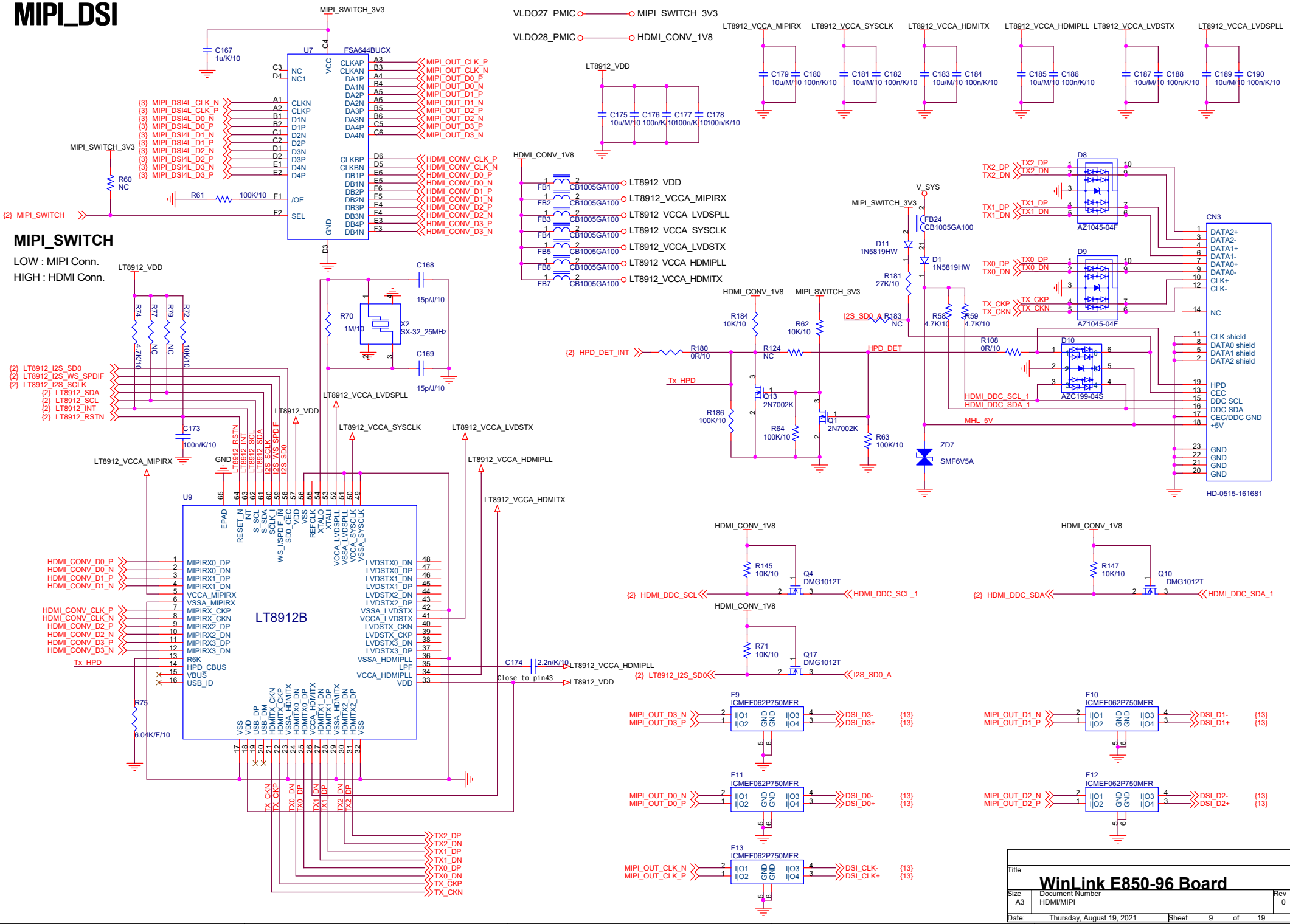

eMCP LP4x eMCP_254ball

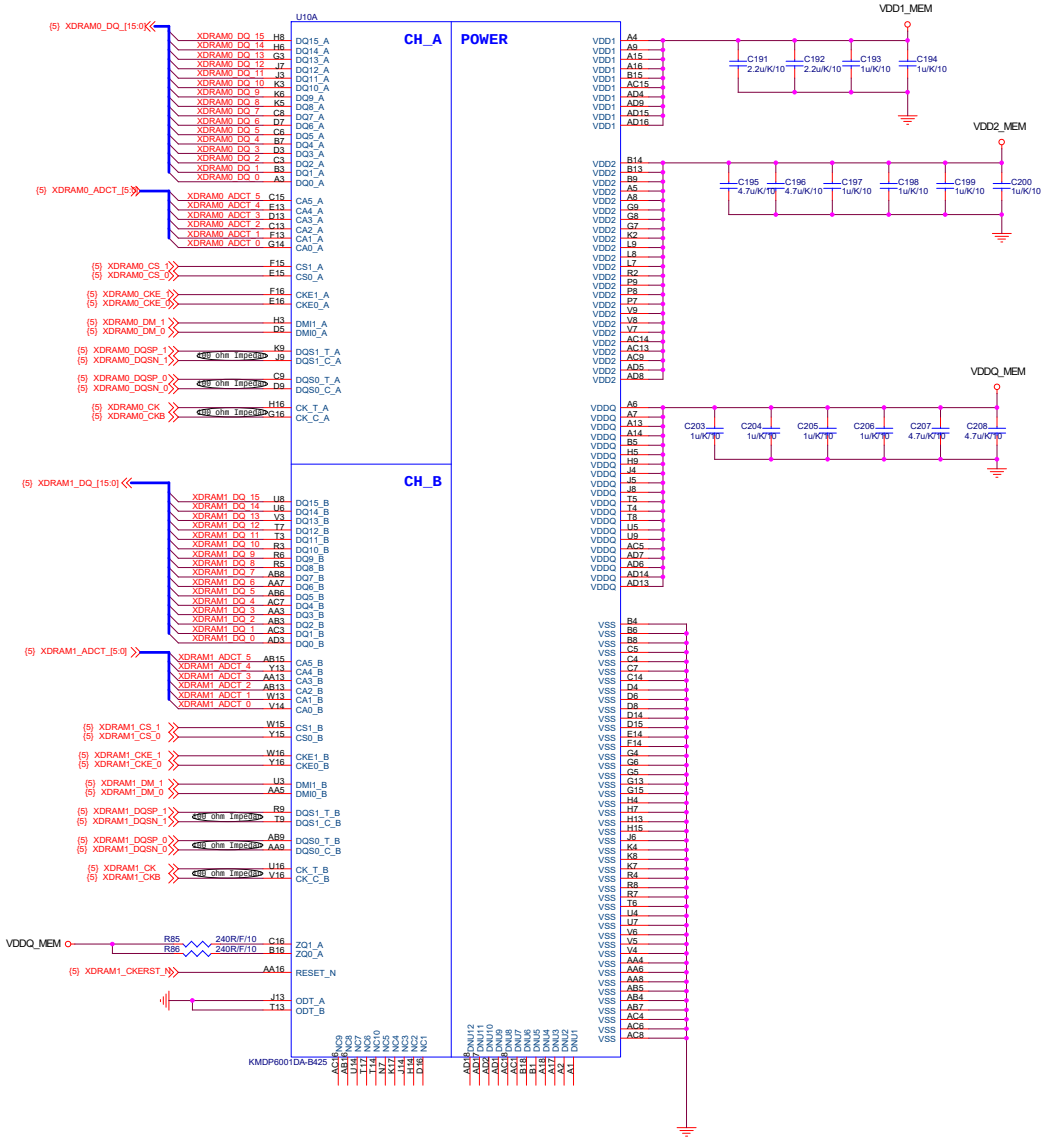

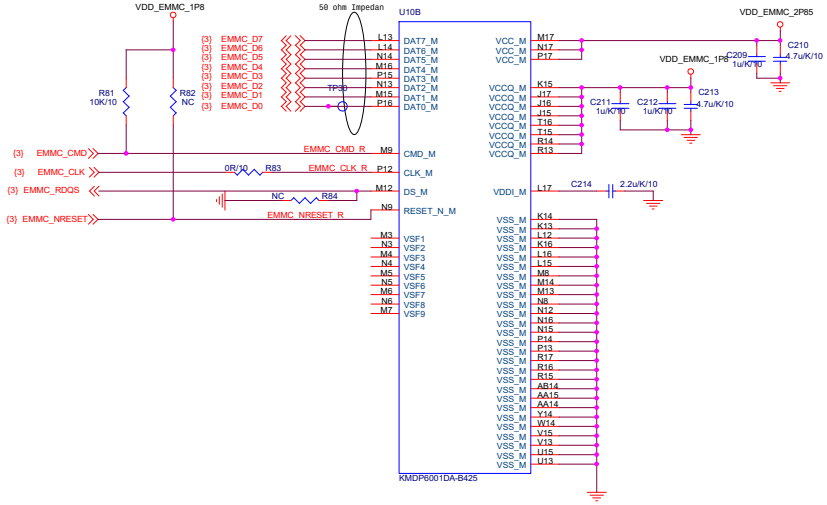

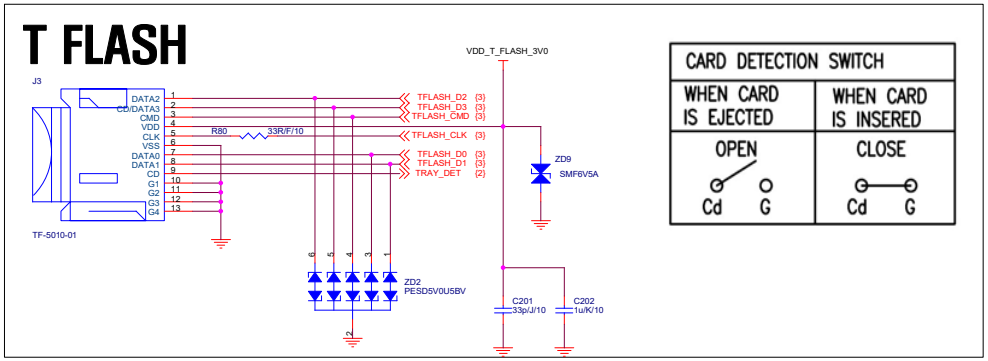

SHIELD CAN & BOTH-HOLE

TOP

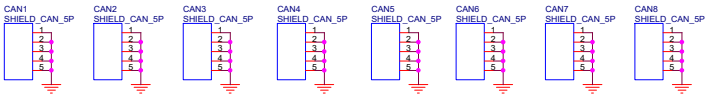

Both-Hole

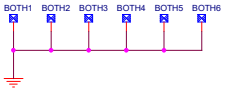

Title	WinLink E850-96 Board		
Size A2	Document Number eMCP/T FLASH		Rev 0
Date: Thursday, August 19, 2021	Sheet 10 of 19		

WIFI/BT

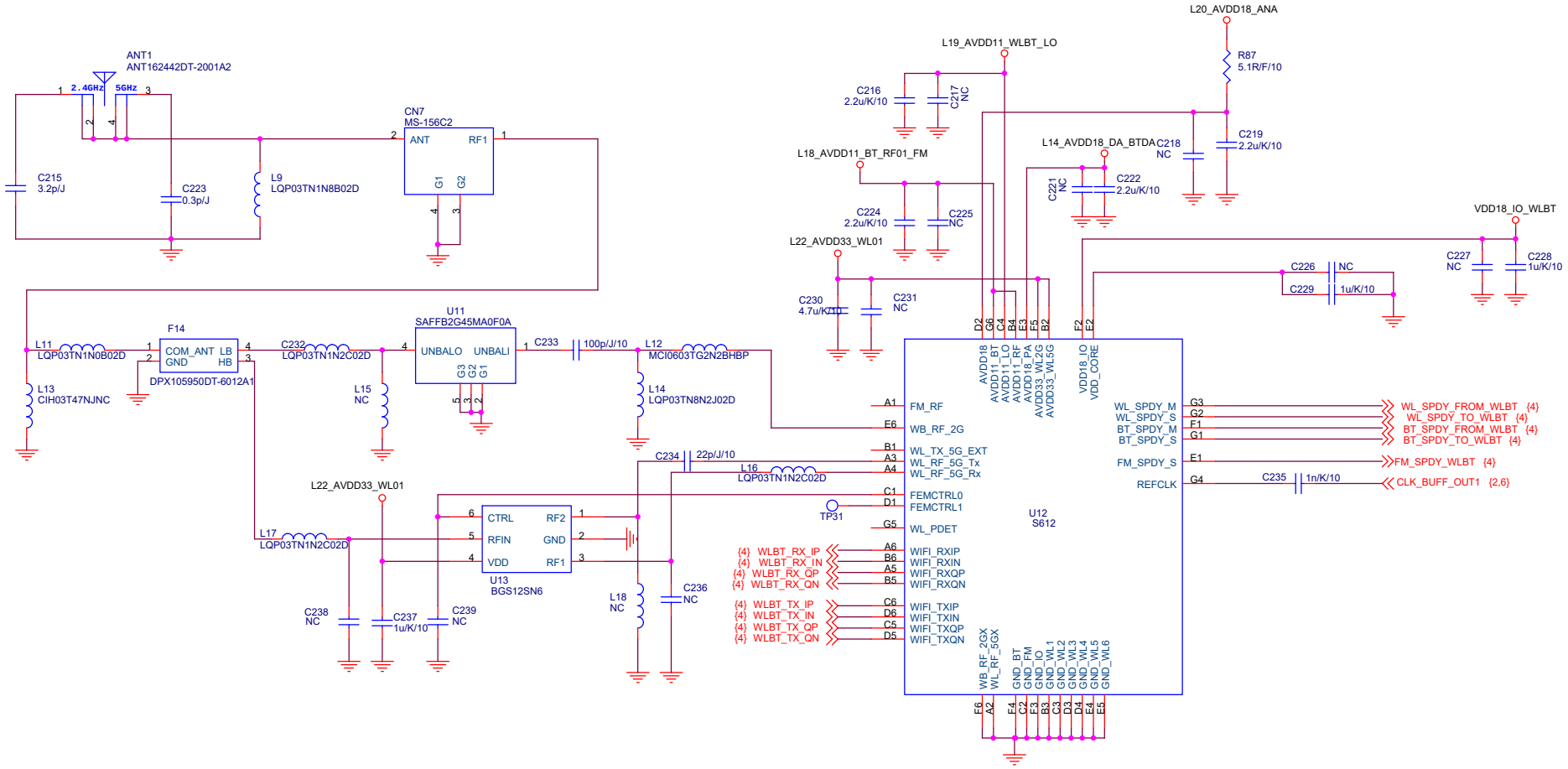

Title	WinLink E850-96 Board	
Size A3	Document Number WIFI/BT	Rev 0
Date: Thursday, August 19, 2021	Sheet 11 of 19	

EAR JACK

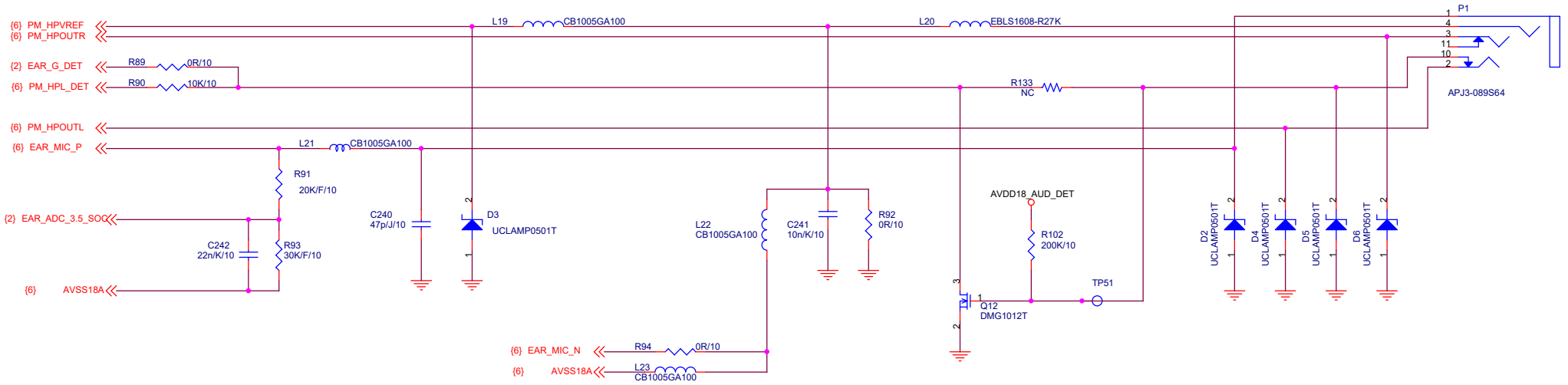

CAMERA

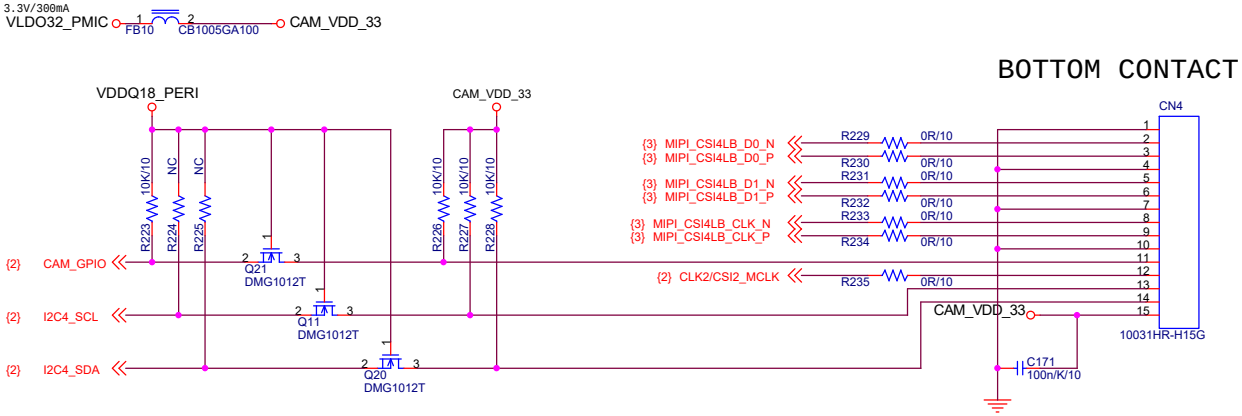

Title	**WinLink E850-96 Board**	
Size A3	Document Number AUDIO/CAMERA Extension	Rev 0
Date: Thursday, August 19, 2021	Sheet 12 of 19	

LOW SPEED

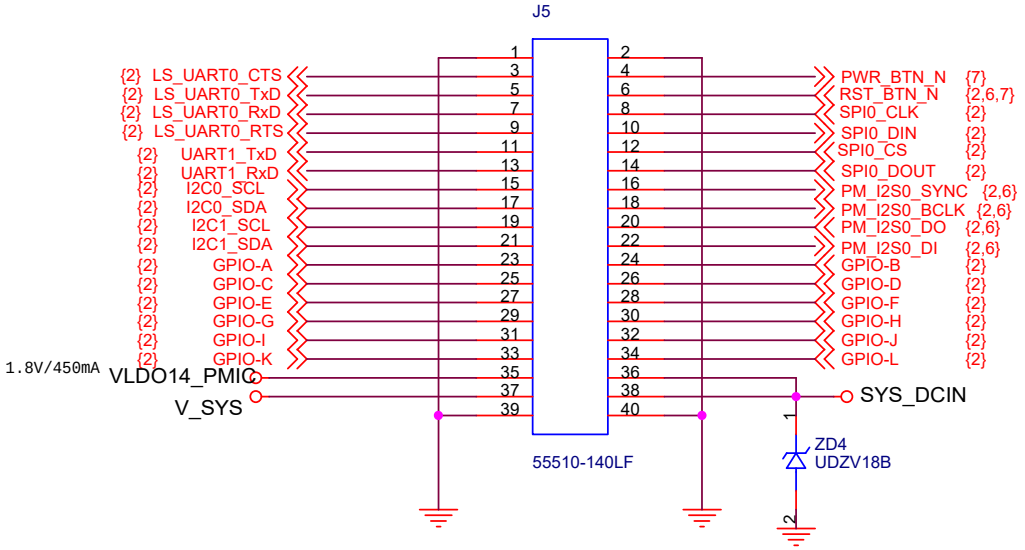

HIGH SPEED

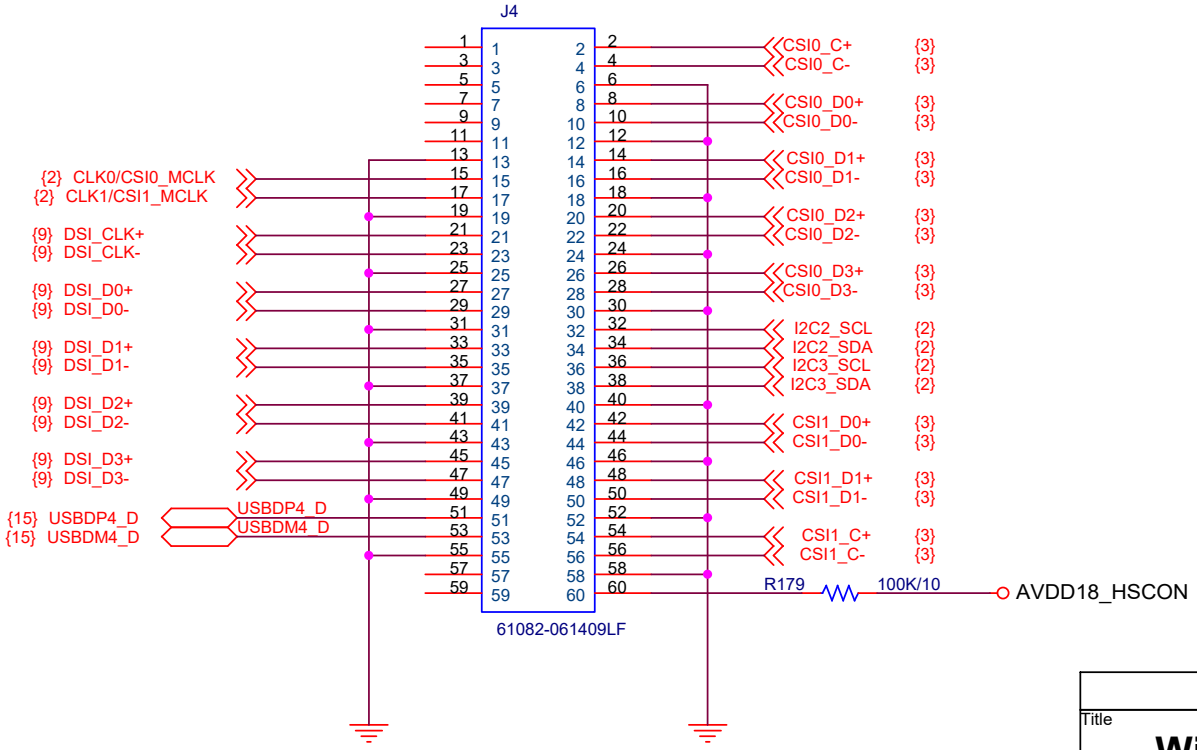

Title	**WinLink E850-96 Board**	
Size A4	Document Number HS & LS Connectors	Rev 0
Date: Thursday, August 19, 2021	Sheet 13 of 19	

Ethernet

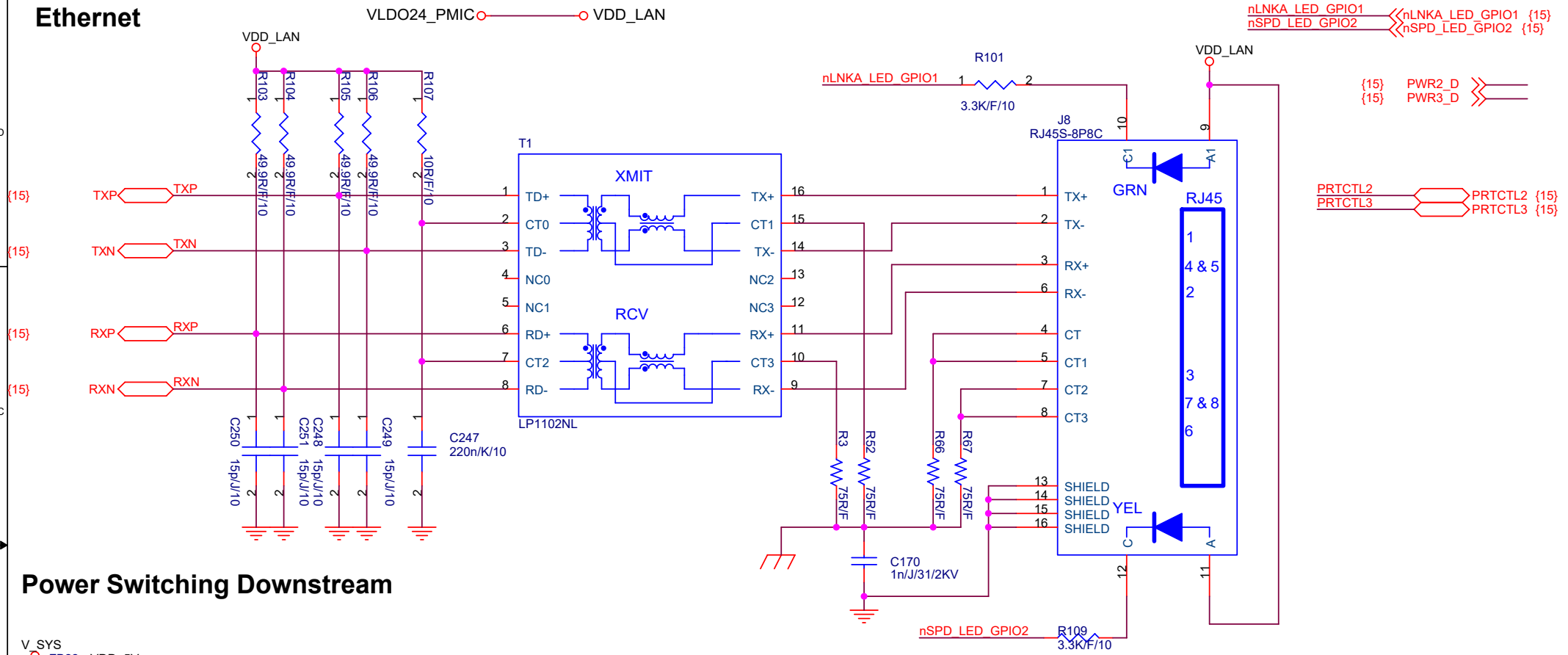

Power Switching Downstream

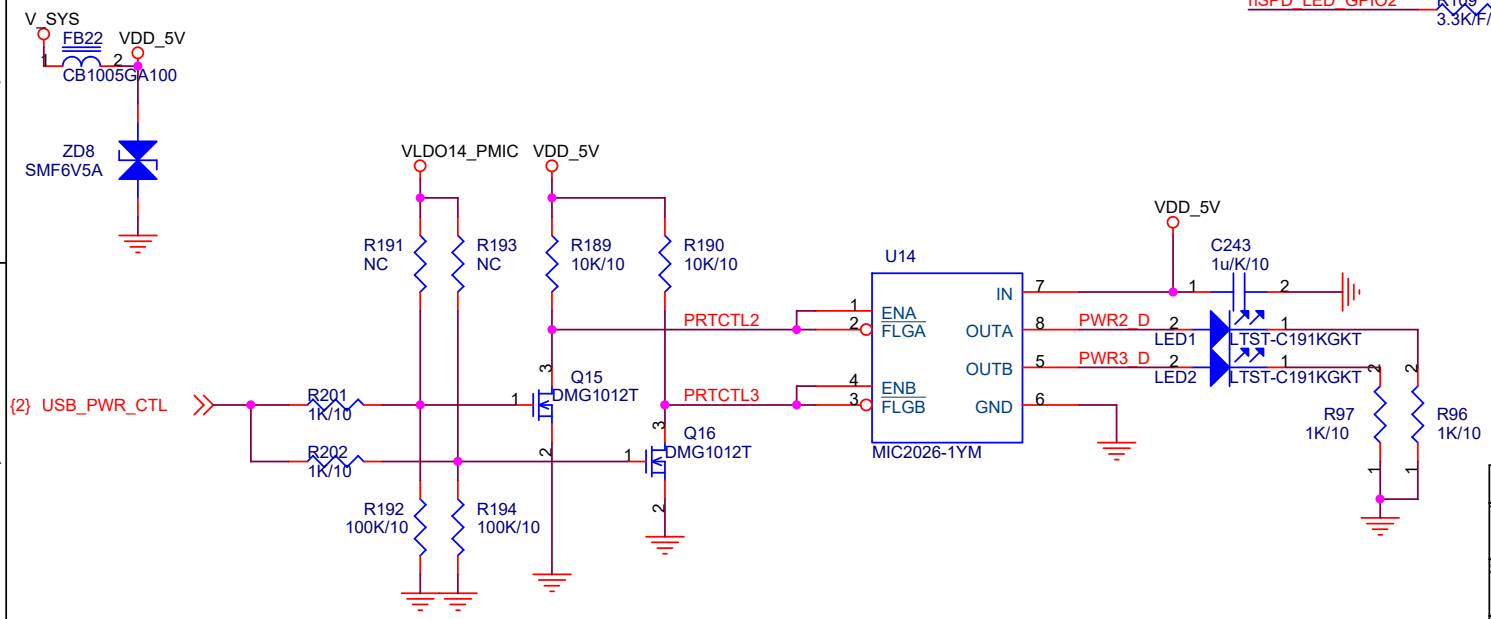

Title	**WinLink E850-96 Board**		
Size A4	Document Number USB Power and Ethernet		Rev 0
Date: Thursday, August 19, 2021		Sheet 14 of 19	

Power Supply Filtering LAN9514

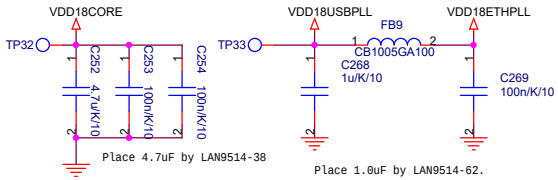

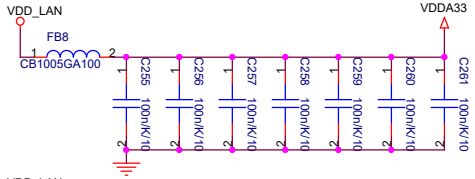

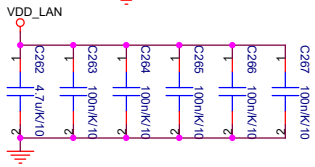

Miscellaneous Components

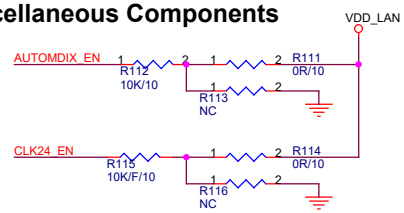

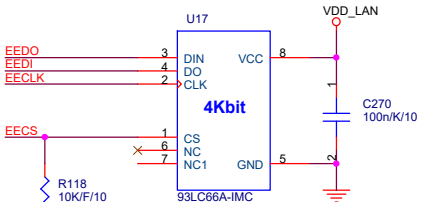

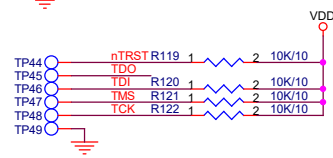

LAN9514

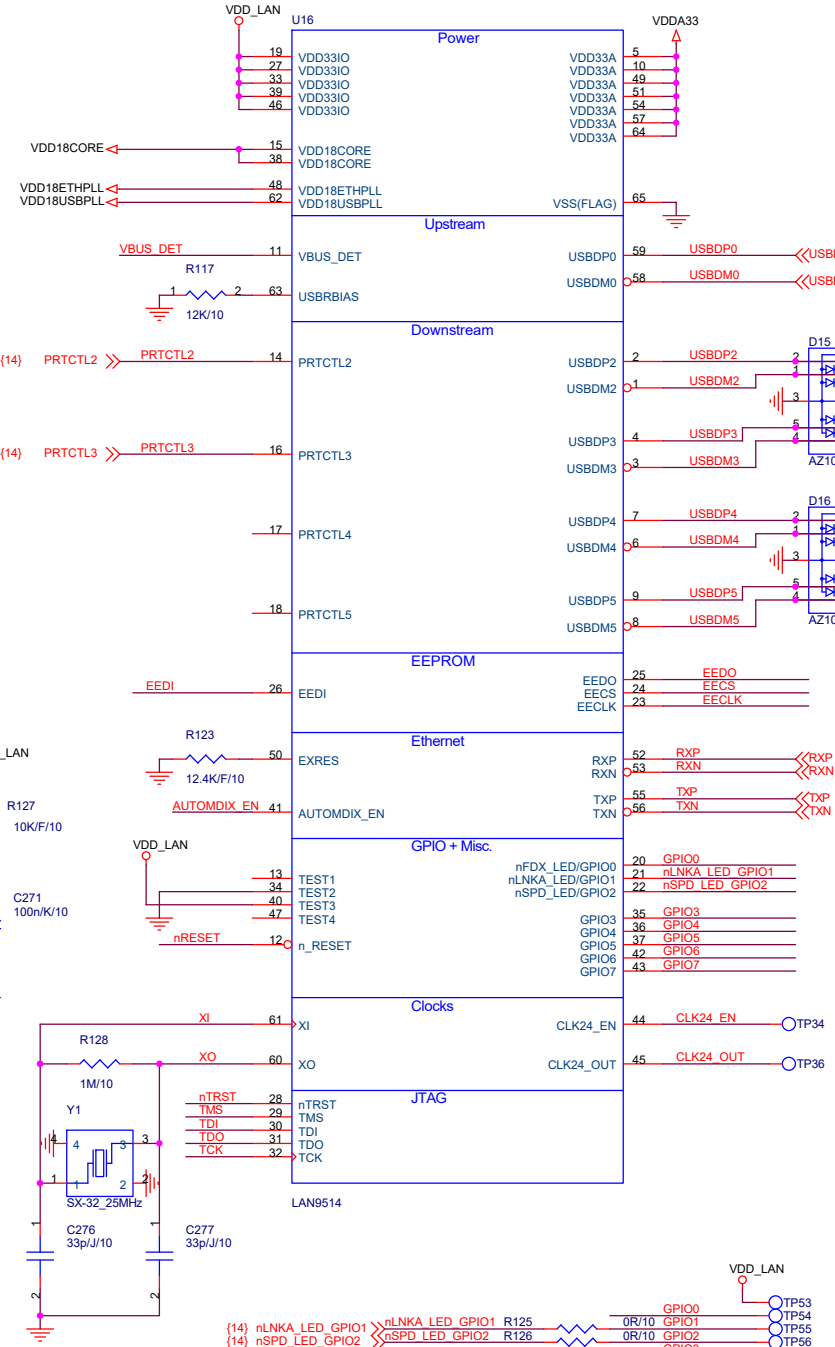

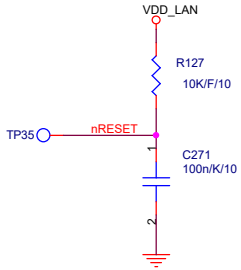

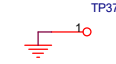

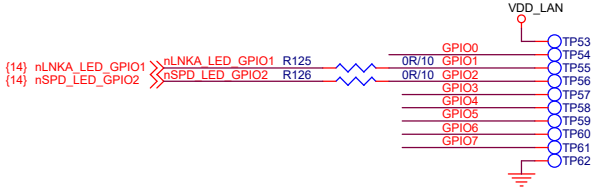

Upstream

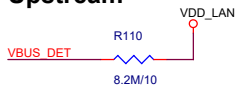

Downstream

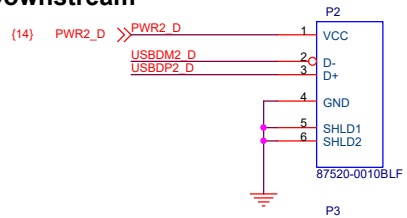

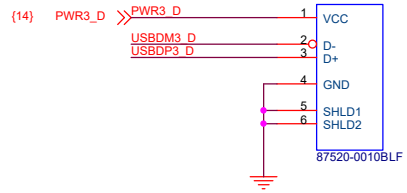

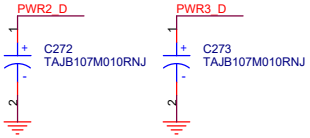

Title	WinLink E850-96 Board		
Size A3	Document Number USB Combo (LAN9514)		Rev 0
Date: Thursday, August 19, 2021		Sheet 15 of 19	

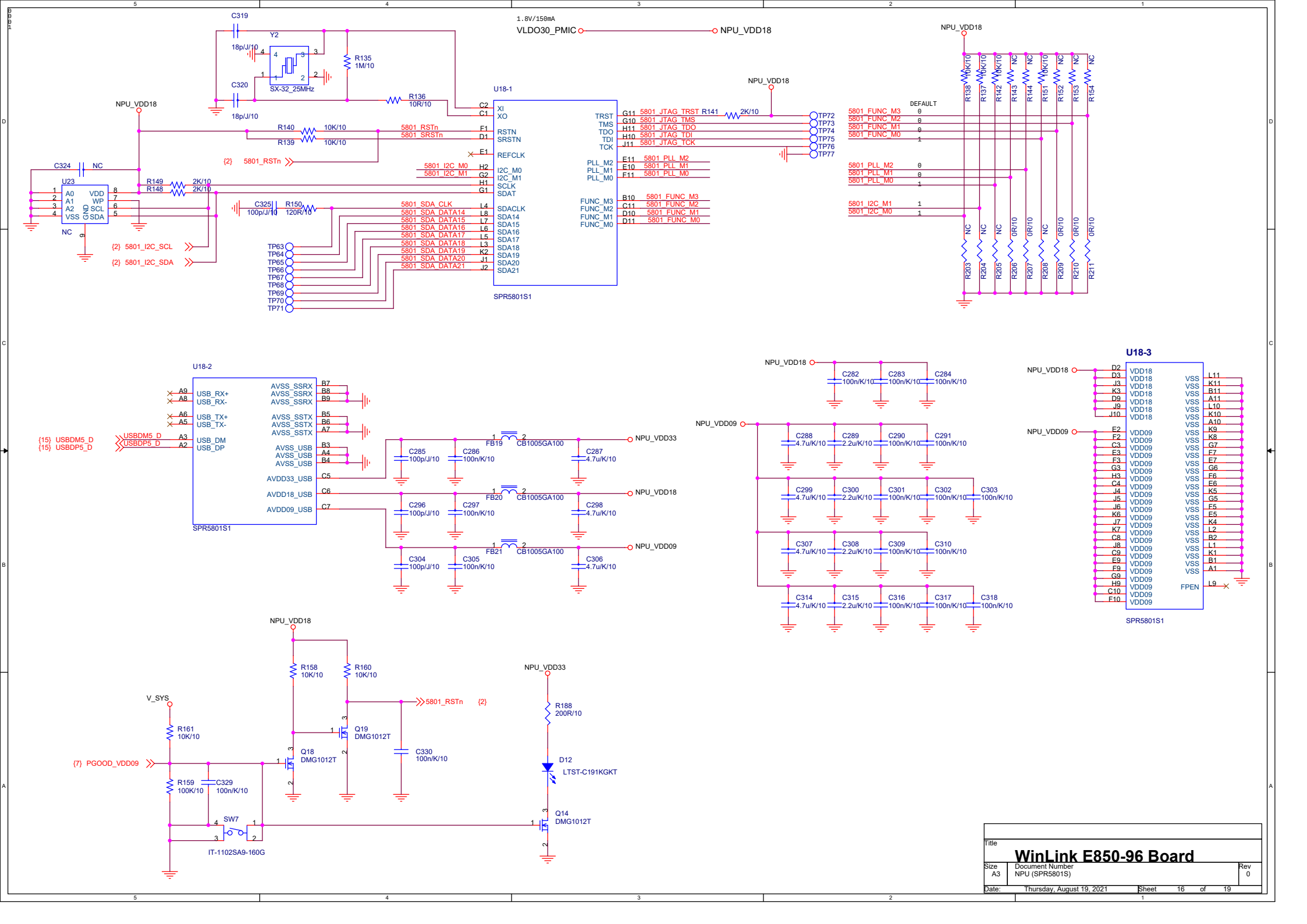

Title

WinLink E850-96 Board

Size	Document Number	Rev
A3	NPU (SPR5801S)	0

Date: Thursday, August 19, 2021 Sheet 16 of 19

Schematic Version	DATE	REVISION HISTORY
0	21.06.16	Created.

Schematic Version	DATE	REVISION HISTORY

Title

WinLink E850-96 Board

Size	Document Number	Rev
A2	REVISION HISTORY	0

Date: Thursday, August 19, 2021 Sheet 17 of 19

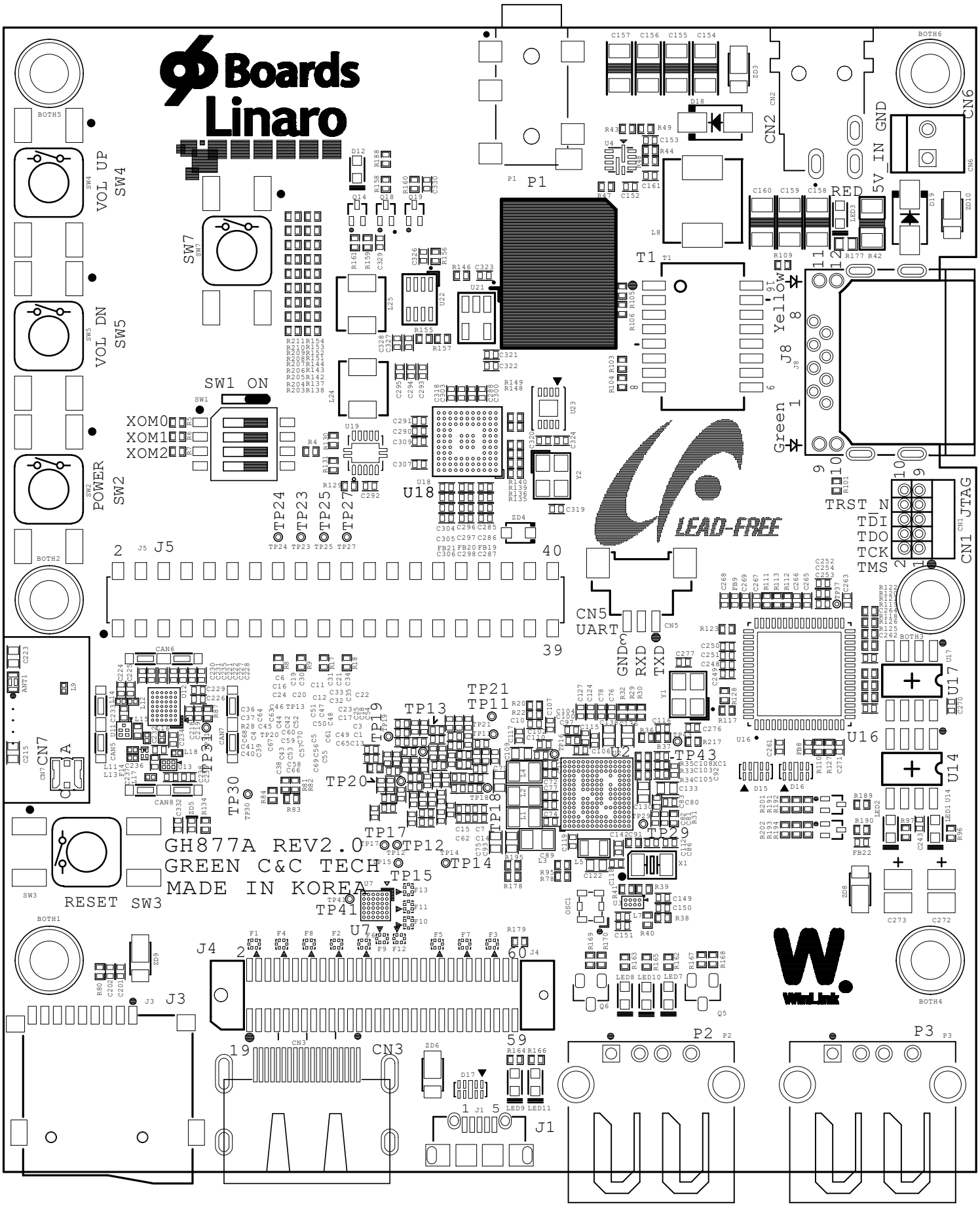

Title	WinLink E850-96 Board		
Size A4	Document Number PCB Layout		Rev 0
Date: Thursday, August 19, 2021		Sheet 18 of 19	

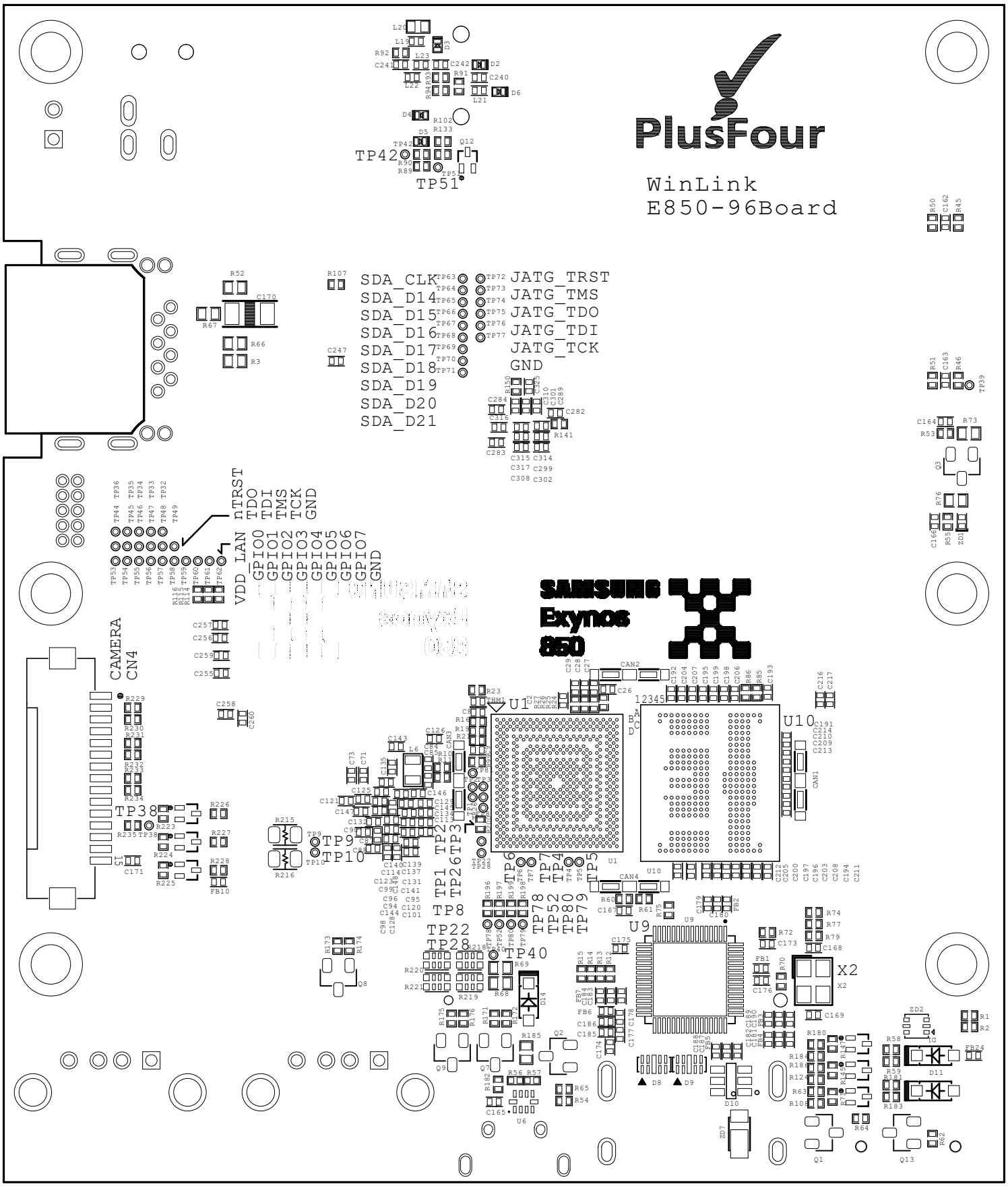

Title	WinLink E850-96 Board		
Size A4	Document Number PCB Layout		Rev 0
Date: Thursday, August 19, 2021	Sheet 19 of 19		