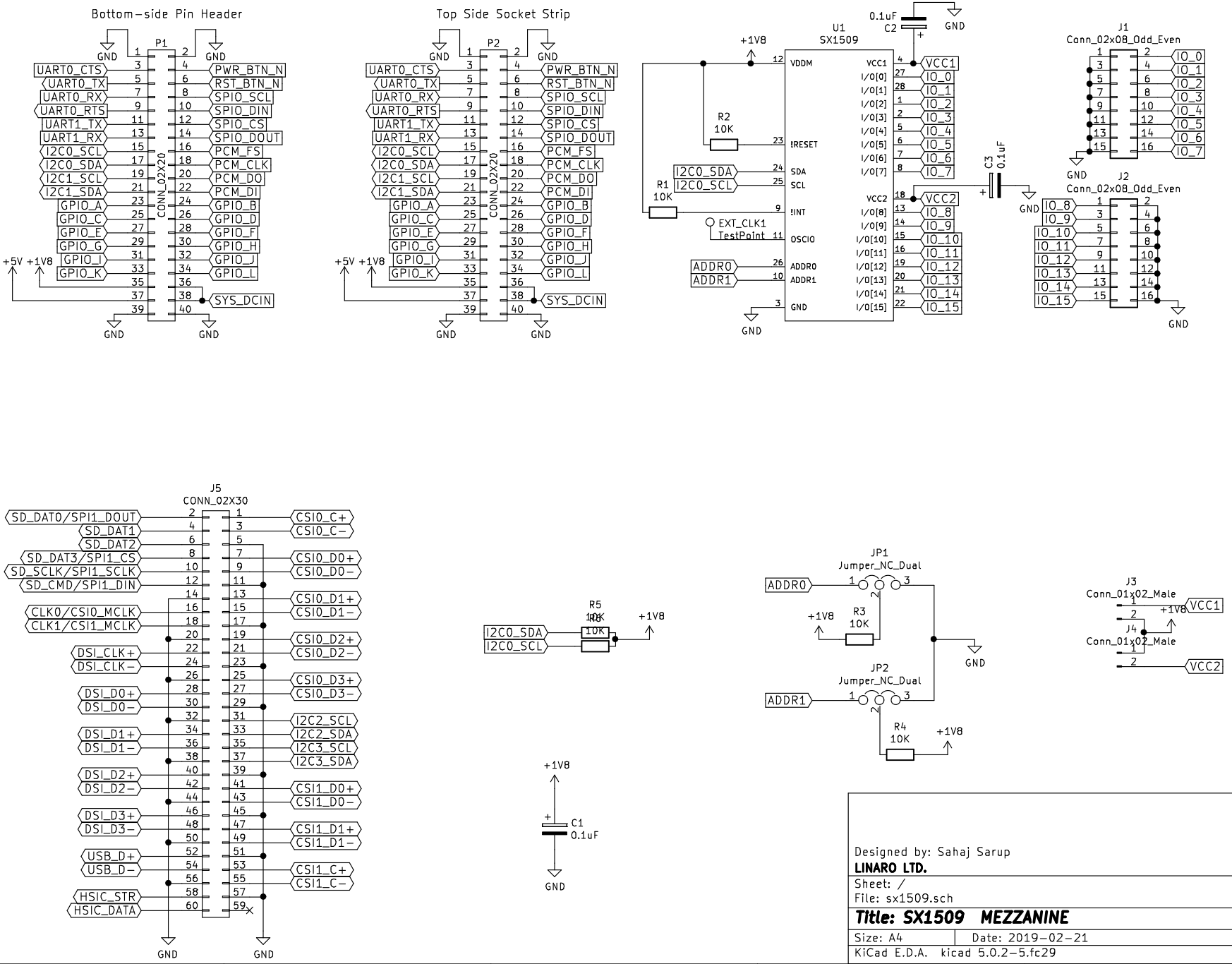

Designed by: Sahaj Sarup
LINARO LTD.

Sheet: /
File: sx1509.sch

Title: SX1509 MEZZANINE

Size: A4	Date: 2019-02-21	**Rev: v0.1**
KiCad E.D.A. kicad 5.0.2-5.fc29		Id: 1/1