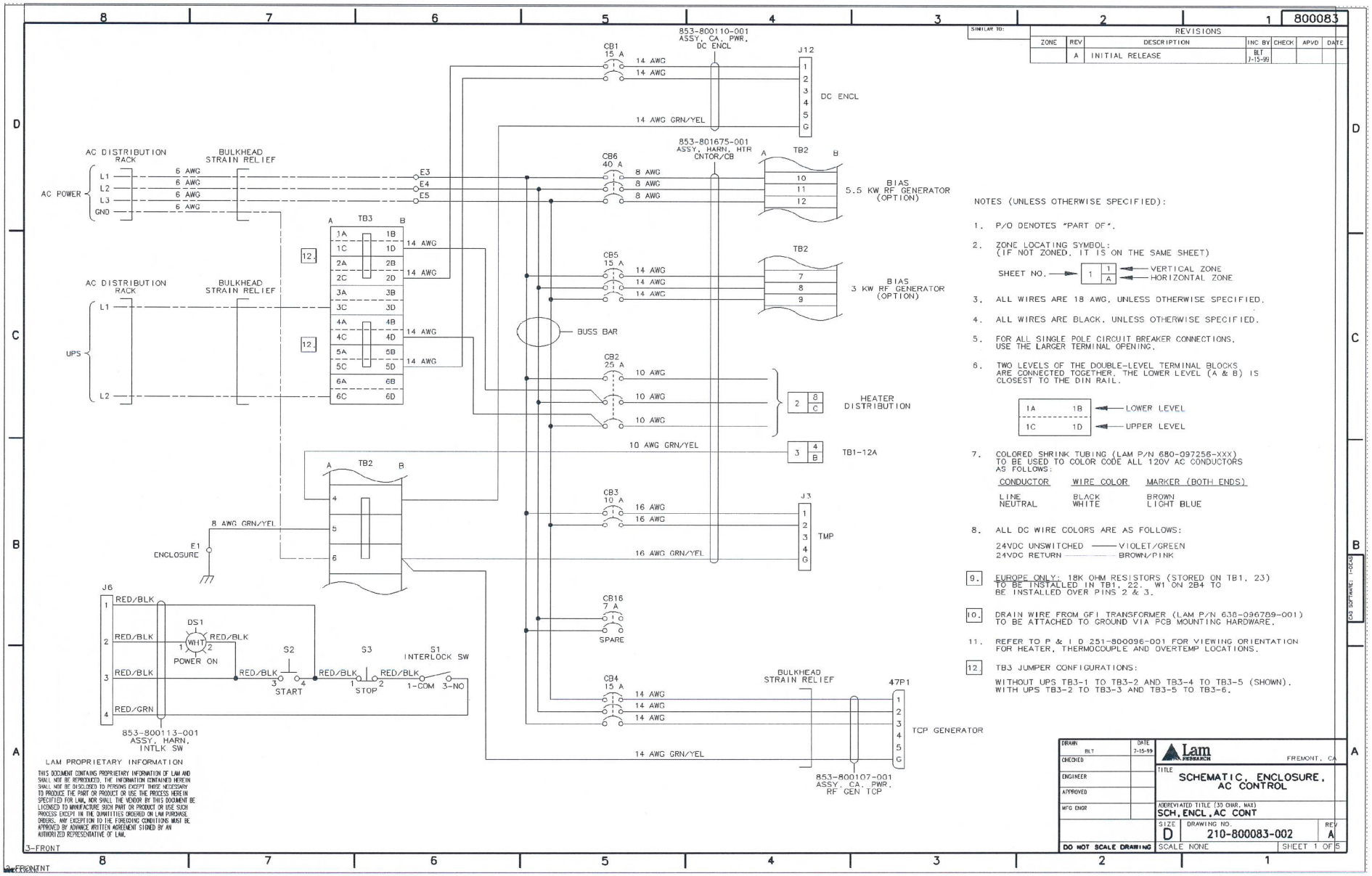
800083
SIMILAR TO:
REVISIONS
ZONE REV DESCRIPTION INC BY CHECK APVD DATE
A INITIAL RELEASE BLT 7-15-99
853-800110-001 ASSY, CA, PWR, DC ENCL
CB1 15 A
14 AWG
14 AWG
14 AWG GRN/YEL
J12
DC ENCL
853-801675-001 ASSY, HARN, HTR CNTOR/CB
CB6 40 A
8 AWG
TB2
BIAS
5.5 KW RF GENERATOR (OPTION)
AC DISTRIBUTION RACK
BULKHEAD STRAIN RELIEF
AC POWER
L1
L2
L3
GND
6 AWG
E3
E4
E5
TB3
14 AWG
CB5 15 A
BIAS
3 KW RF GENERATOR (OPTION)
UPS
BUSS BAR
CB2 25 A
10 AWG
HEATER DISTRIBUTION
10 AWG GRN/YEL
TB1-12A
CB3 10 A
16 AWG
J3
TMP
8 AWG GRN/YEL
E1 ENCLOSURE
16 AWG GRN/YEL
CB16 7 A
SPARE
J6
RED/BLK
RED/GRN
DS1
WHT
POWER ON
S2
START
S3
STOP
S1
INTERLOCK SW
1-COM 3-NO
853-800113-001 ASSY, HARN, INTLK SW
CB4 15 A
BULKHEAD STRAIN RELIEF
47P1
TCP GENERATOR
853-800107-001 ASSY, CA, PWR, RF GEN TCP
LAM PROPRIETARY INFORMATION
THIS DOCUMENT CONTAINS PROPRIETARY INFORMATION OF LAM AND SHALL NOT BE REPRODUCED. THE INFORMATION CONTAINED HEREIN SHALL NOT BE DISCLOSED TO PERSONS EXCEPT THOSE NECESSARY TO PRODUCE THE PART OR PRODUCT OR USE THE PROCESS HEREIN SPECIFIED FOR LAM, NOR SHALL THE VENDOR BY THIS DOCUMENT BE LICENSED TO MANUFACTURE SUCH PART OR PRODUCT OR USE SUCH PROCESS EXCEPT IN THE QUANTITIES ORDERED ON LAM PURCHASE ORDERS. ANY EXCEPTION TO THE FOREGOING CONDITIONS MUST BE APPROVED BY ADVANCE WRITTEN AGREEMENT SIGNED BY AN AUTHORIZED REPRESENTATIVE OF LAM.
3-FRONT
NOTES (UNLESS OTHERWISE SPECIFIED):
1. P/O DENOTES "PART OF".
2. ZONE LOCATING SYMBOL: (IF NOT ZONED, IT IS ON THE SAME SHEET)
SHEET NO. 1 1 A
VERTICAL ZONE
HORIZONTAL ZONE
3. ALL WIRES ARE 18 AWG, UNLESS OTHERWISE SPECIFIED.
4. ALL WIRES ARE BLACK, UNLESS OTHERWISE SPECIFIED.
5. FOR ALL SINGLE POLE CIRCUIT BREAKER CONNECTIONS, USE THE LARGER TERMINAL OPENING.
6. TWO LEVELS OF THE DOUBLE-LEVEL TERMINAL BLOCKS ARE CONNECTED TOGETHER. THE LOWER LEVEL (A & B) IS CLOSEST TO THE DIN RAIL.
1A 1B LOWER LEVEL
1C 1D UPPER LEVEL
7. COLORED SHRINK TUBING (LAM P/N 680-097256-XXX) TO BE USED TO COLOR CODE ALL 120V AC CONDUCTORS AS FOLLOWS:
CONDUCTOR WIRE COLOR MARKER (BOTH ENDS)
LINE BLACK BROWN
NEUTRAL WHITE LIGHT BLUE
8. ALL DC WIRE COLORS ARE AS FOLLOWS:
24VDC UNSWITCHED VIOLET/GREEN
24VDC RETURN BROWN/PINK
9. EUROPE ONLY: 18K OHM RESISTORS (STORED ON TB1, 23) TO BE INSTALLED IN TB1, 22, W1 ON 2B4 TO BE INSTALLED OVER PINS 2 & 3.
10. DRAIN WIRE FROM GFI TRANSFORMER (LAM P/N 630-096789-001) TO BE ATTACHED TO GROUND VIA PCB MOUNTING HARDWARE.
11. REFER TO P & I D 251-800096-001 FOR VIEWING ORIENTATION FOR HEATER, THERMOCOUPLE AND OVERTEMP LOCATIONS.
12. TB3 JUMPER CONFIGURATIONS:
WITHOUT UPS TB3-1 TO TB3-2 AND TB3-4 TO TB3-5 (SHOWN).
WITH UPS TB3-2 TO TB3-3 AND TB3-5 TO TB3-6.
DRAWN BLT DATE 7-15-99
CHECKED
ENGINEER
APPROVED
MFG ENGR
Lam RESEARCH FREMONT, CA
TITLE
SCHEMATIC, ENCLOSURE, AC CONTROL
ABBREVIATED TITLE (35 CHAR. MAX)
SCH, ENCL, AC CONT
SIZE D DRAWING NO. 210-800083-002 REV A
DO NOT SCALE DRAWING SCALE NONE SHEET 1 OF 5
CAD SOFTWARE: I-DEAS

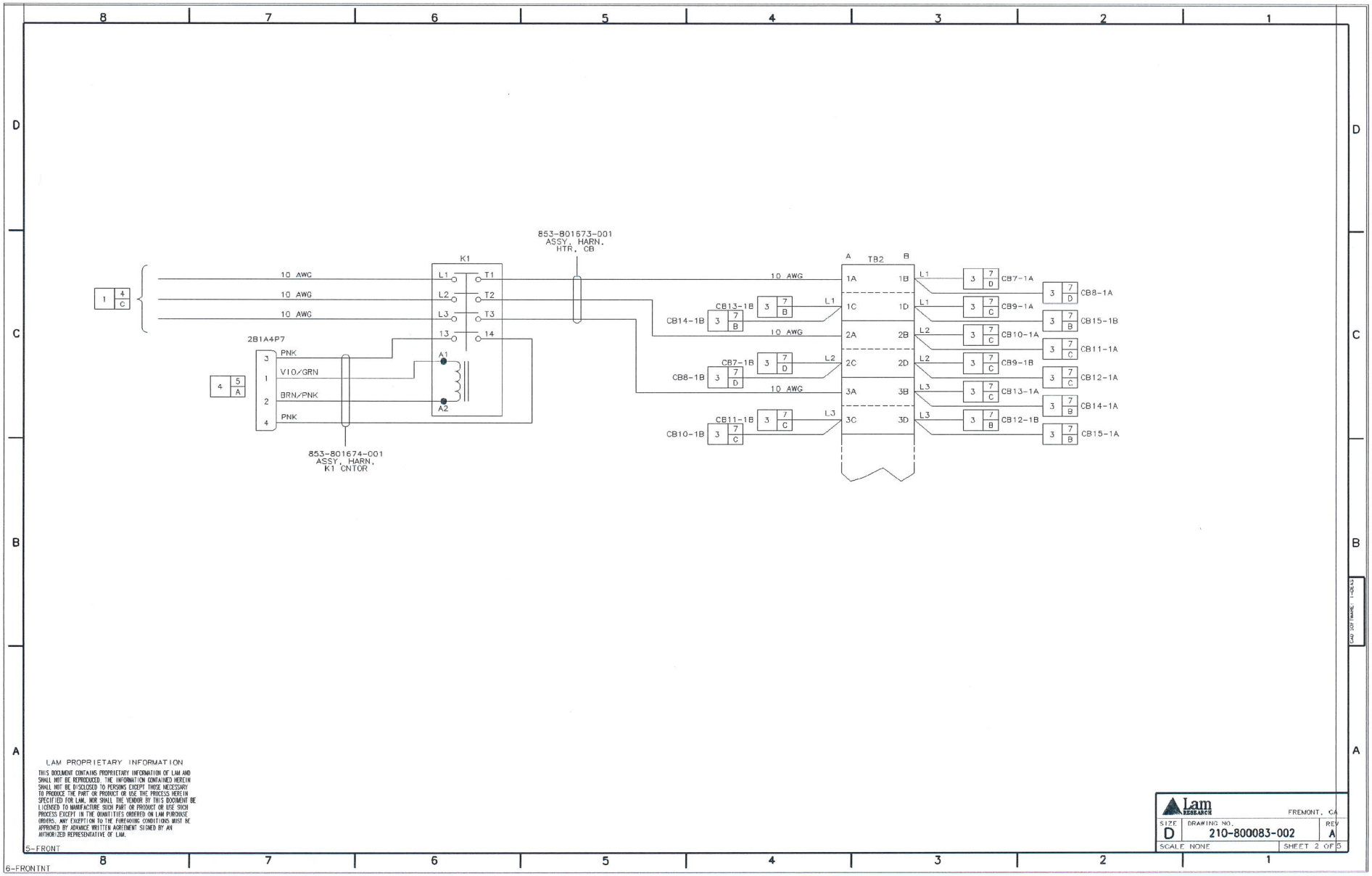

LAM PROPRIETARY INFORMATION

THIS DOCUMENT CONTAINS PROPRIETARY INFORMATION OF LAM AND SHALL NOT BE REPRODUCED. THE INFORMATION CONTAINED HEREIN SHALL NOT BE DISCLOSED TO PERSONS EXCEPT THOSE NECESSARY TO PRODUCE THE PART OR PRODUCT OR USE THE PROCESS HEREIN SPECIFIED FOR LAM. NOR SHALL THE VENDOR BY THIS DOCUMENT BE LICENSED TO MANUFACTURE SUCH PART OR PRODUCT OR USE SUCH PROCESS EXCEPT IN THE QUANTITIES ORDERED ON LAM PURCHASE ORDERS. ANY EXCEPTION TO THE FOREGOING CONDITIONS MUST BE APPROVED BY ADVANCE WRITTEN AGREEMENT SIGNED BY AN AUTHORIZED REPRESENTATIVE OF LAM.

5-FRONT

6-FRONTNT

Lam RESEARCH FREMONT, CA

SIZE	DRAWING NO.	REV
D	210-800083-002	A
SCALE NONE		SHEET 2 OF 5

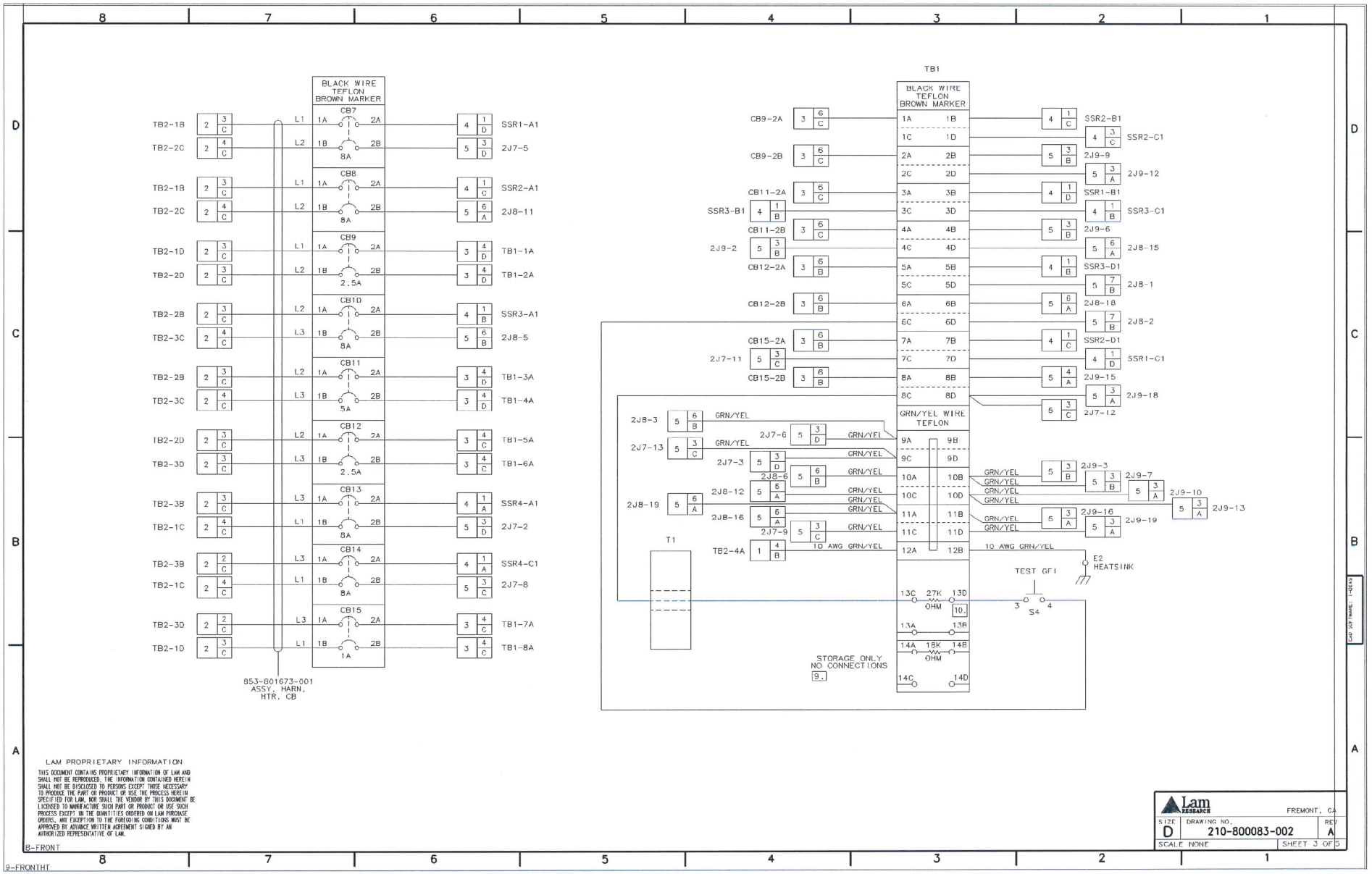

LAM PROPRIETARY INFORMATION

THIS DOCUMENT CONTAINS PROPRIETARY INFORMATION OF LAM AND SHALL NOT BE REPRODUCED. THE INFORMATION CONTAINED HEREIN SHALL NOT BE DISCLOSED TO PERSONS EXCEPT THOSE NECESSARY TO PRODUCE THE PART OR PRODUCT OR USE THE PROCESS HEREIN SPECIFIED FOR LAM. NOR SHALL THE VENDOR BY THIS DOCUMENT BE LICENSED TO MANUFACTURE SUCH PART OR PRODUCT OR USE SUCH PROCESS EXCEPT IN THE QUANTITIES OBSERVED ON LAM PURCHASE ORDERS. ANY EXCEPTION TO THE FOREGOING CONDITIONS MUST BE APPROVED BY ADVANCE WRITTEN AGREEMENT SIGNED BY AN AUTHORIZED REPRESENTATIVE OF LAM.

8-FRONT

9-FRONTHT

Lam RESEARCH FREMONT, CA

SIZE	DRAWING NO.	REV
D	210-800083-002	A
SCALE NONE		SHEET 3 OF 5

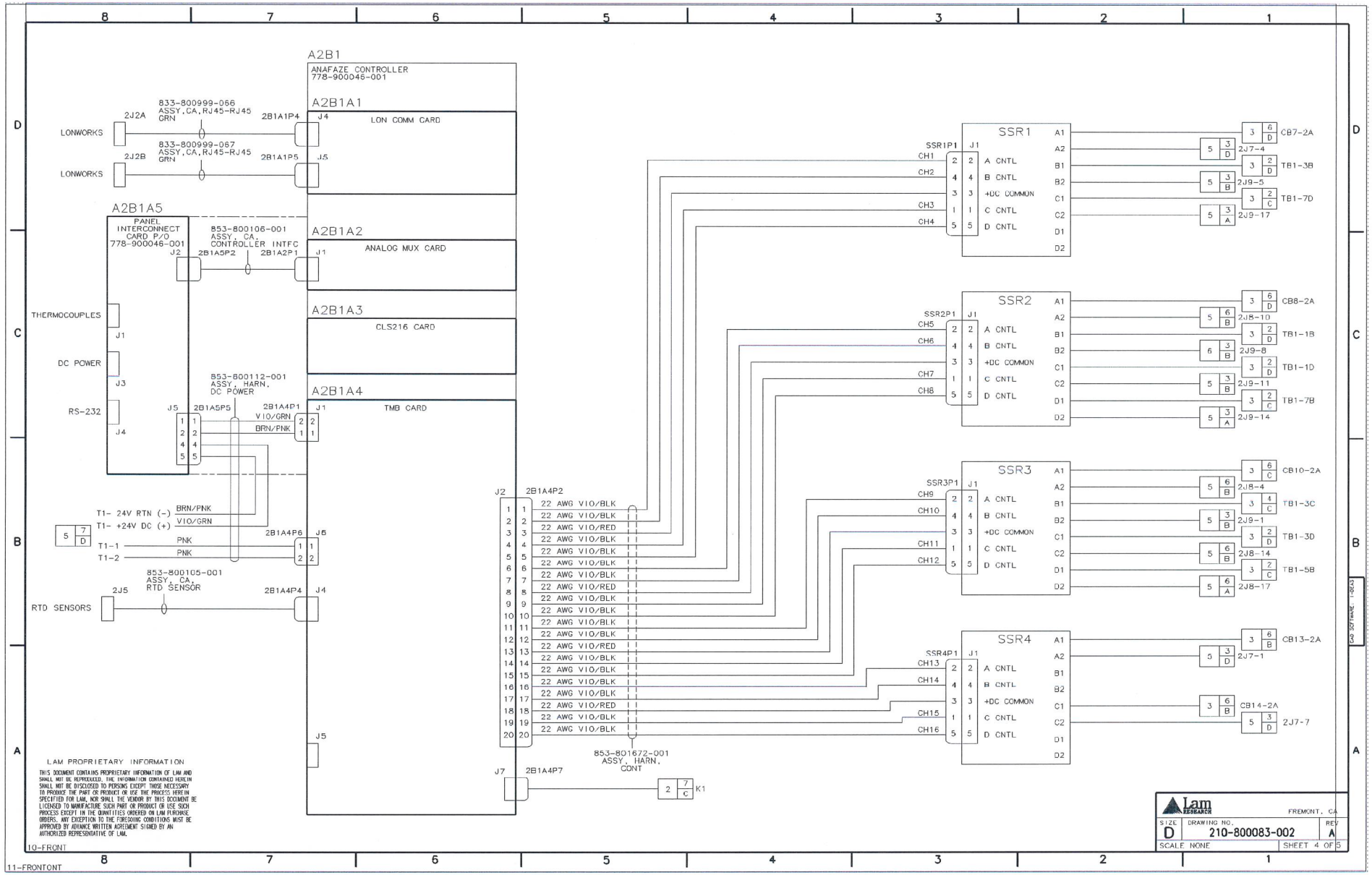
A2B1
ANAFAZE CONTROLLER
778-900046-001
A2B1A1
LON COMM CARD
A2B1A2
ANALOG MUX CARD
A2B1A3
CLS216 CARD
A2B1A4
TMB CARD
A2B1A5
PANEL INTERCONNECT CARD P/O
778-900046-001
LONWORKS
LONWORKS
833-800999-066
ASSY,CA,RJ45-RJ45
GRN
833-800999-067
ASSY,CA,RJ45-RJ45
GRN
853-800106-001
ASSY, CA, CONTROLLER INTFC
853-800112-001
ASSY, HARN, DC POWER
THERMOCOUPLES
DC POWER
RS-232
T1- 24V RTN (-)
T1- +24V DC (+)
T1-1
T1-2
853-800105-001
ASSY, CA, RTD SENSOR
RTD SENSORS
853-801672-001
ASSY, HARN, CONT
SSR1
SSR2
SSR3
SSR4
A CNTL
B CNTL
+DC COMMON
C CNTL
D CNTL
CB7-2A
TB1-3B
TB1-7D
CB8-2A
TB1-1B
TB1-1D
TB1-7B
CB10-2A
TB1-3C
TB1-3D
TB1-5B
CB13-2A
CB14-2A
LAM PROPRIETARY INFORMATION
THIS DOCUMENT CONTAINS PROPRIETARY INFORMATION OF LAM AND SHALL NOT BE REPRODUCED. THE INFORMATION CONTAINED HEREIN SHALL NOT BE DISCLOSED TO PERSONS EXCEPT THOSE NECESSARY TO PRODUCE THE PART OR PRODUCT OR USE THE PROCESS HEREIN SPECIFIED FOR LAM, NOR SHALL THE VENDOR BY THIS DOCUMENT BE LICENSED TO MANUFACTURE SUCH PART OR PRODUCT OR USE SUCH PROCESS EXCEPT IN THE QUANTITIES ORDERED ON LAM PURCHASE ORDERS. ANY EXCEPTION TO THE FOREGOING CONDITIONS MUST BE APPROVED BY ADVANCE WRITTEN AGREEMENT SIGNED BY AN AUTHORIZED REPRESENTATIVE OF LAM.
Lam RESEARCH
FREMONT, CA
SIZE D
DRAWING NO. 210-800083-002
REV A
SCALE NONE
SHEET 4 OF 5
10-FRONT
11-FRONTONT

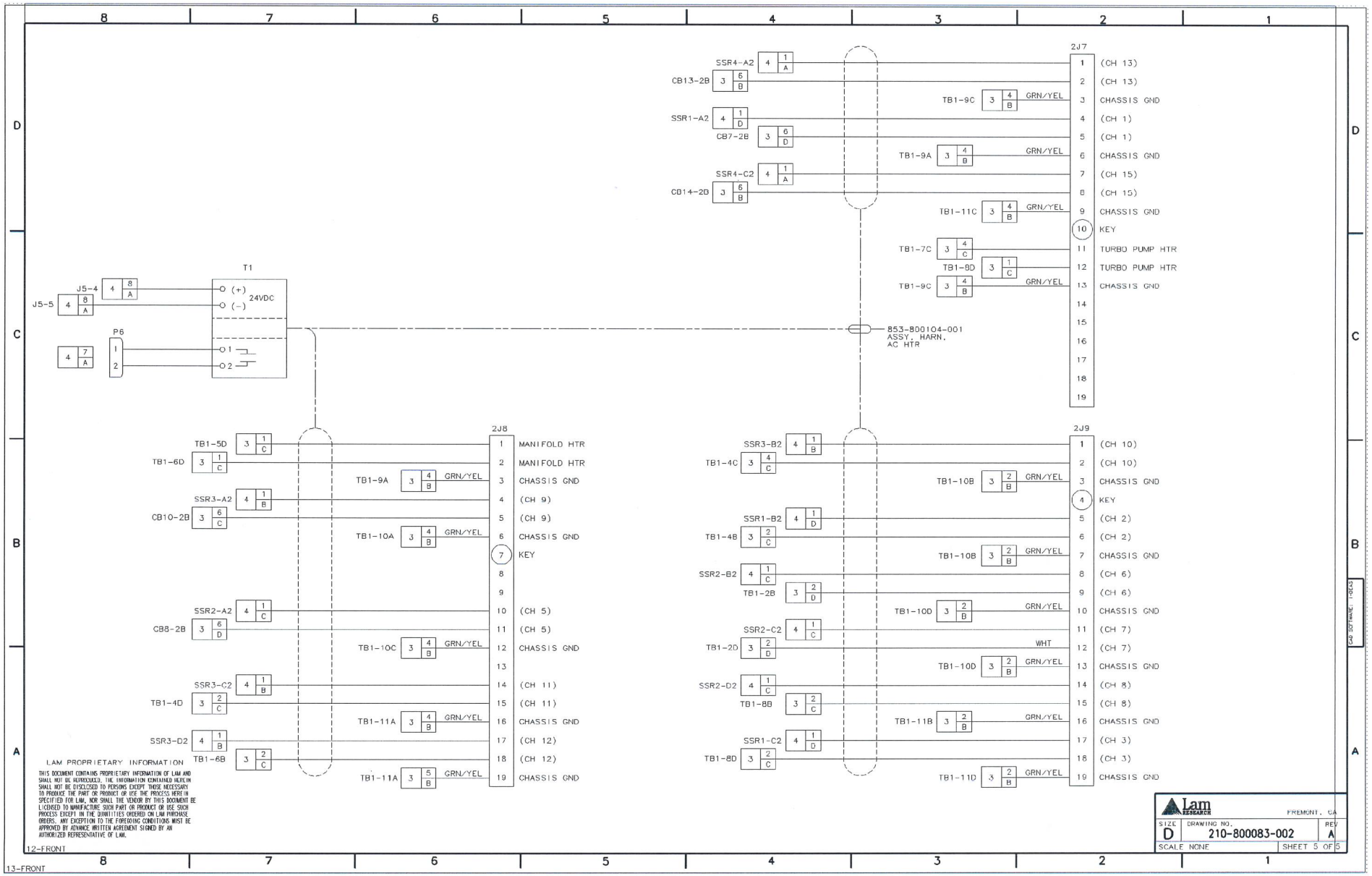
2J7
1 (CH 13)
2 (CH 13)
3 CHASSIS GND
4 (CH 1)
5 (CH 1)
6 CHASSIS GND
7 (CH 15)
8 (CH 15)
9 CHASSIS GND
10 KEY
11 TURBO PUMP HTR
12 TURBO PUMP HTR
13 CHASSIS GND
14
15
16
17
18
19
SSR4-A2
CB13-2B
SSR1-A2
CB7-2B
SSR4-C2
CB14-2B
TB1-9C
TB1-9A
TB1-11C
TB1-7C
TB1-8D
TB1-9C
GRN/YEL
T1
24VDC
J5-4
J5-5
P6
853-800104-001
ASSY. HARN.
AC HTR
2J8
1 MANIFOLD HTR
2 MANIFOLD HTR
3 CHASSIS GND
4 (CH 9)
5 (CH 9)
6 CHASSIS GND
7 KEY
8
9
10 (CH 5)
11 (CH 5)
12 CHASSIS GND
13
14 (CH 11)
15 (CH 11)
16 CHASSIS GND
17 (CH 12)
18 (CH 12)
19 CHASSIS GND
TB1-5D
TB1-6D
TB1-9A
SSR3-A2
CB10-2B
TB1-10A
SSR2-A2
CB8-2B
TB1-10C
SSR3-C2
TB1-4D
TB1-11A
SSR3-D2
TB1-6B
TB1-11A
2J9
1 (CH 10)
2 (CH 10)
3 CHASSIS GND
4 KEY
5 (CH 2)
6 (CH 2)
7 CHASSIS GND
8 (CH 6)
9 (CH 6)
10 CHASSIS GND
11 (CH 7)
12 (CH 7)
13 CHASSIS GND
14 (CH 8)
15 (CH 8)
16 CHASSIS GND
17 (CH 3)
18 (CH 3)
19 CHASSIS GND
SSR3-B2
TB1-4C
TB1-10B
SSR1-B2
TB1-4B
TB1-10B
SSR2-B2
TB1-2B
TB1-10D
SSR2-C2
TB1-2D
WHT
TB1-10D
SSR2-D2
TB1-8B
TB1-11B
SSR1-C2
TB1-8D
TB1-11D
LAM PROPRIETARY INFORMATION
THIS DOCUMENT CONTAINS PROPRIETARY INFORMATION OF LAM AND SHALL NOT BE REPRODUCED. THE INFORMATION CONTAINED HEREIN SHALL NOT BE DISCLOSED TO PERSONS EXCEPT THOSE NECESSARY TO PRODUCE THE PART OR PRODUCT OR USE THE PROCESS HERE IN SPECIFIED FOR LAM, NOR SHALL THE VENDOR BY THIS DOCUMENT BE LICENSED TO MANUFACTURE SUCH PART OR PRODUCT OR USE SUCH PROCESS EXCEPT IN THE QUANTITIES ORDERED ON LAM PURCHASE ORDERS. ANY EXCEPTION TO THE FOREGOING CONDITIONS MUST BE APPROVED BY ADVANCE WRITTEN AGREEMENT SIGNED BY AN AUTHORIZED REPRESENTATIVE OF LAM.
12-FRONT
13-FRONT
Lam RESEARCH
FREMONT, CA
SIZE D
DRAWING NO. 210-800083-002
REV A
SCALE NONE
SHEET 5 OF 5
CAD SOFTWARE: I-DEAS