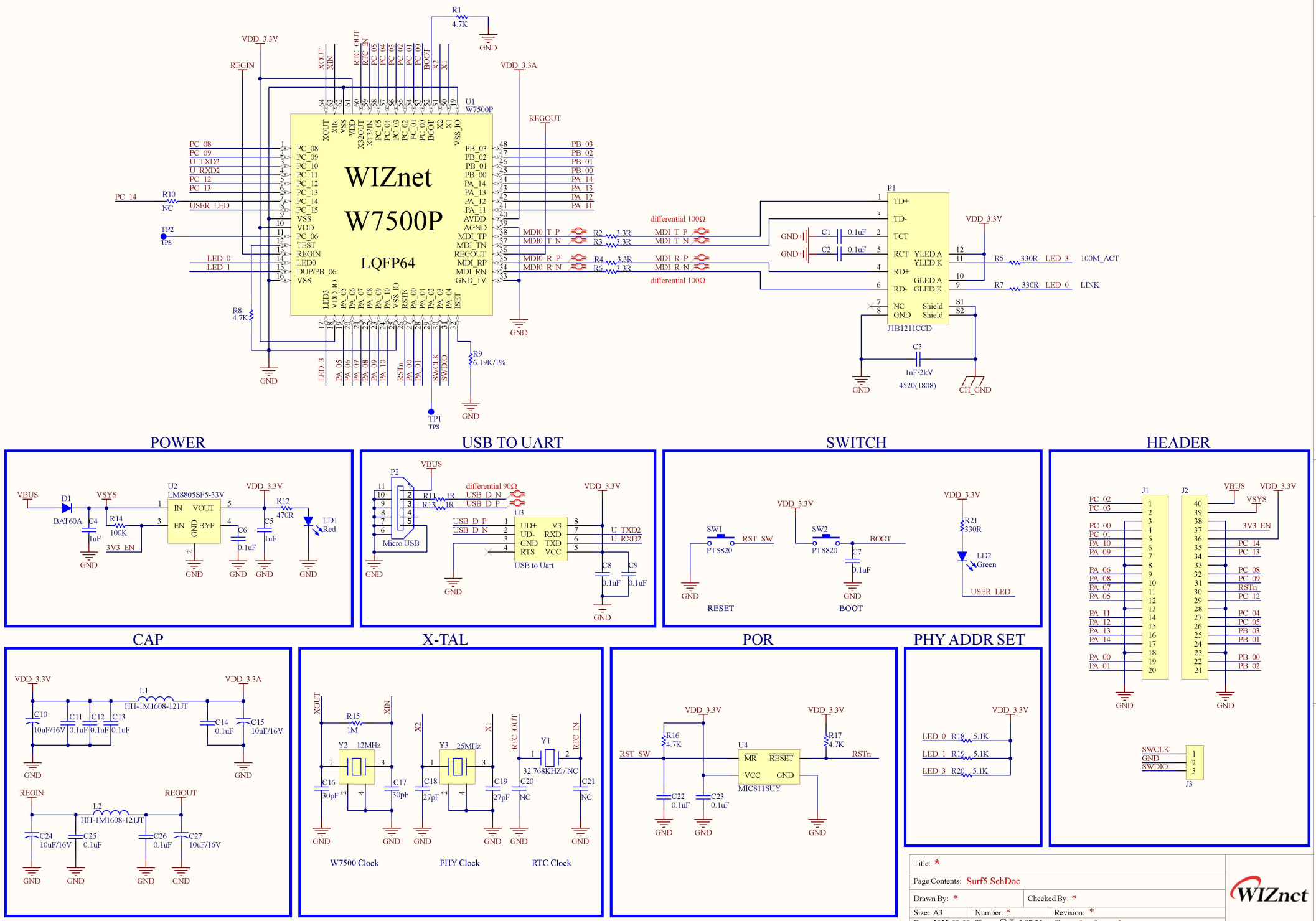
WIZnet
W7500P
LQFP64
U1
W7500P
VDD_3.3V
VDD_3.3A
REGIN
REGOUT
R1
4.7K
GND
PC_14
R10
NC
USER_LED
TP2
TPS
LED_0
LED_1
R8
4.7K
R9
6.19K/1%
TP1
TPS
MDI0_T_P
MDI0_T_N
MDI0_R_P
MDI0_R_N
R2
R3
R4
R6
3.3R
differential 100Ω
MDI_T_P
MDI_T_N
MDI_R_P
MDI_R_N
P1
TD+
TD-
TCT
RCT
RD+
RD-
NC
GND
YLED A
YLED K
GLED A
GLED K
Shield
J1B1211CCD
C1
C2
0.1uF
C3
1nF/2kV
4520(1808)
CH_GND
R5
330R
LED_3
100M_ACT
R7
330R
LED_0
LINK
POWER
D1
BAT60A
VBUS
VSYS
C4
1uF
R14
100K
3V3_EN
U2
LM8805SF5-33V
IN
VOUT
EN
BYP
C6
0.1uF
C5
1uF
R12
470R
LD1
Red
USB TO UART
P2
Micro USB
R11
R13
1R
USB_D_N
USB_D_P
U3
UD+
UD-
GND
RTS
V3
RXD
TXD
VCC
USB to Uart
U_TXD2
U_RXD2
C8
C9
0.1uF
SWITCH
SW1
PTS820
RST_SW
RESET
SW2
BOOT
C7
R21
330R
LD2
Green
USER_LED
HEADER
J1
J2
PC_02
PC_03
PC_00
PC_01
PA_10
PA_09
PA_06
PA_08
PA_07
PA_05
PA_11
PA_12
PA_13
PA_14
PA_00
PA_01
VBUS
VSYS
3V3_EN
PC_14
PC_13
PC_08
PC_09
RSTn
PC_12
PC_04
PC_05
PB_03
PB_01
PB_00
PB_02
CAP
L1
HH-1M1608-121JT
C10
10uF/16V
C11
C12
C13
C14
C15
L2
C24
C25
C26
C27
X-TAL
XOUT
XIN
R15
1M
Y2
12MHz
C16
30pF
C17
X2
X1
Y3
25MHz
C18
27pF
C19
RTC_OUT
RTC_IN
Y1
32.768KHZ / NC
C20
NC
C21
W7500 Clock
PHY Clock
RTC Clock
POR
R16
4.7K
U4
MR
RESET
VCC
GND
MIC811SUY
R17
RSTn
C22
C23
PHY ADDR SET
LED_0
R18
5.1K
LED_1
R19
LED_3
R20
SWCLK
SWDIO
J3
Title: *
Page Contents: Surf5.SchDoc
Drawn By: *
Checked By: *
Size: A3
Number: *
Revision: *
Date: 2023-09-19
Time: 오후 5:07:25
Sheet 1 of 1
WIZnet