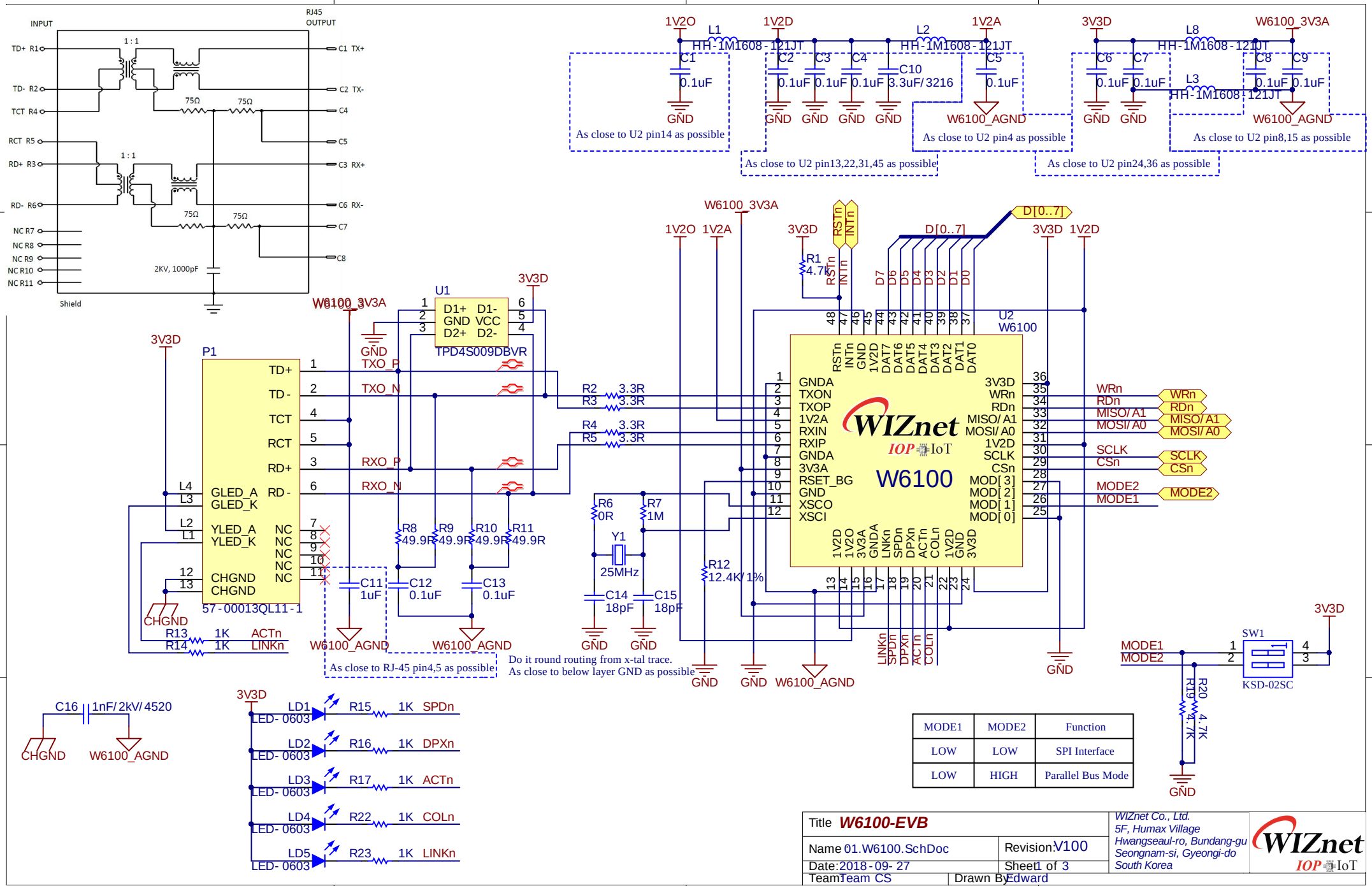

MODE1	MODE2	Function
LOW	LOW	SPI Interface
LOW	HIGH	Parallel Bus Mode

Title **W6100-EVB**		WIZnet Co., Ltd. 5F, Humax Village Hwangseaul-ro, Bundang-gu Seongnam-si, Gyeongi-do South Korea
Name 01.W6100.SchDoc	Revision: V100	
Date: 2018-09-27	Sheet 1 of 3	
Team Team CS	Drawn By Edward	

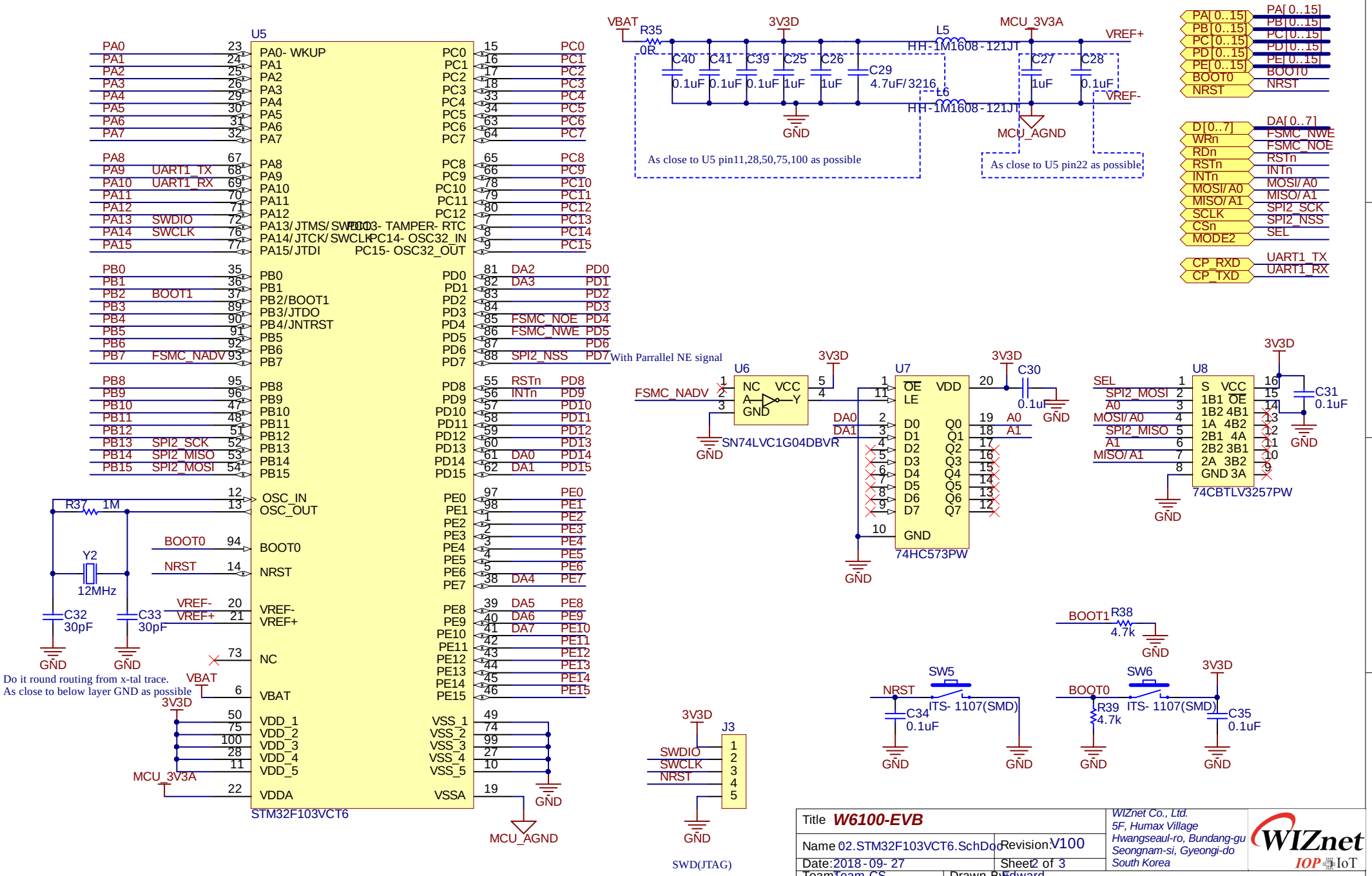
U5
STM32F103VCT6
PA0- WKUP
PA1
PA2
PA3
PA4
PA5
PA6
PA7
PA8
PA9 UART1_TX
PA10 UART1_RX
PA11
PA12
PA13 SWDIO
PA14 SWCLK
PA15
PB0
PB1
PB2 BOOT1
PB3
PB4
PB5
PB6
PB7 FSMC_NADV
PB8
PB9
PB10
PB11
PB12
PB13 SPI2_SCK
PB14 SPI2_MISO
PB15 SPI2_MOSI
PC0
PC1
PC2
PC3
PC4
PC5
PC6
PC7
PC8
PC9
PC10
PC11
PC12
PC13- TAMPER- RTC
PC14- OSC32_IN
PC15- OSC32_OUT
PD0 DA2
PD1 DA3
PD2
PD3
PD4 FSMC_NOE
PD5 FSMC_NWE
PD6
PD7 SPI2_NSS
PD8 RSTn
PD9 INTn
PD10
PD11
PD12
PD13
PD14 DA0
PD15 DA1
OSC_IN
OSC_OUT
BOOT0
NRST
VREF-
VREF+
NC
VBAT
VDD_1
VDD_2
VDD_3
VDD_4
VDD_5
VDDA
PE0
PE1
PE2
PE3
PE4
PE5
PE6
PE7 DA4
PE8 DA5
PE9 DA6
PE10 DA7
PE11
PE12
PE13
PE14
PE15
VSS_1
VSS_2
VSS_3
VSS_4
VSS_5
VSSA
R37 1M
Y2
12MHz
C32 30pF
C33 30pF
GND
Do it round routing from x-tal trace.
As close to below layer GND as possible
3V3D
MCU_3V3A
MCU_AGND
VBAT
R35 0R
C40 0.1uF
C41 0.1uF
C39 0.1uF
C25 1uF
C26 1uF
C29 4.7uF/3216
L5 HH-1M1608-121JT
L6 HH-1M1608-121JT
MCU_3V3A
C27 1uF
C28 0.1uF
VREF+
VREF-
As close to U5 pin11,28,50,75,100 as possible
As close to U5 pin22 as possible
PA[0..15]
PB[0..15]
PC[0..15]
PD[0..15]
PE[0..15]
BOOT0
NRST
D[0..7]
WRn
RDn
RSTn
INTn
MOSI/A0
MISO/A1
SCLK
CSn
MODE2
DA[0..7]
FSMC_NWE
FSMC_NOE
SPI2_SCK
SPI2_NSS
SEL
CP_RXD
CP_TXD
UART1_TX
UART1_RX
With Parrallel NE signal
U6
FSMC_NADV
NC
VCC
A
Y
GND
SN74LVC1G04DBVR
U7
OE
VDD
LE
D0
D1
D2
D3
D4
D5
D6
D7
Q0
Q1
Q2
Q3
Q4
Q5
Q6
Q7
GND
74HC573PW
C30 0.1uF
DA0
DA1
A0
A1
U8
SEL
SPI2_MOSI
A0
MOSI/A0
SPI2_MISO
A1
MISO/A1
S
VCC
1B1
OE
1B2
4B1
1A
4B2
2B1
4A
2B2
3B1
2A
3B2
GND
3A
74CBTLV3257PW
C31 0.1uF
BOOT1
R38 4.7k
SW5
NRST
ITS-1107(SMD)
C34 0.1uF
SW6
BOOT0
R39 4.7k
C35 0.1uF
J3
SWDIO
SWCLK
NRST
SWD(JTAG)
Title W6100-EVB
Name 02.STM32F103VCT6.SchDoc
Revision V100
Date 2018-09-27
Sheet 2 of 3
Team Team CS
Drawn By Edward
WIZnet Co., Ltd.
5F, Humax Village
Hwangseaul-ro, Bundang-gu
Seongnam-si, Gyeongi-do
South Korea
WIZnet
IOP IoT

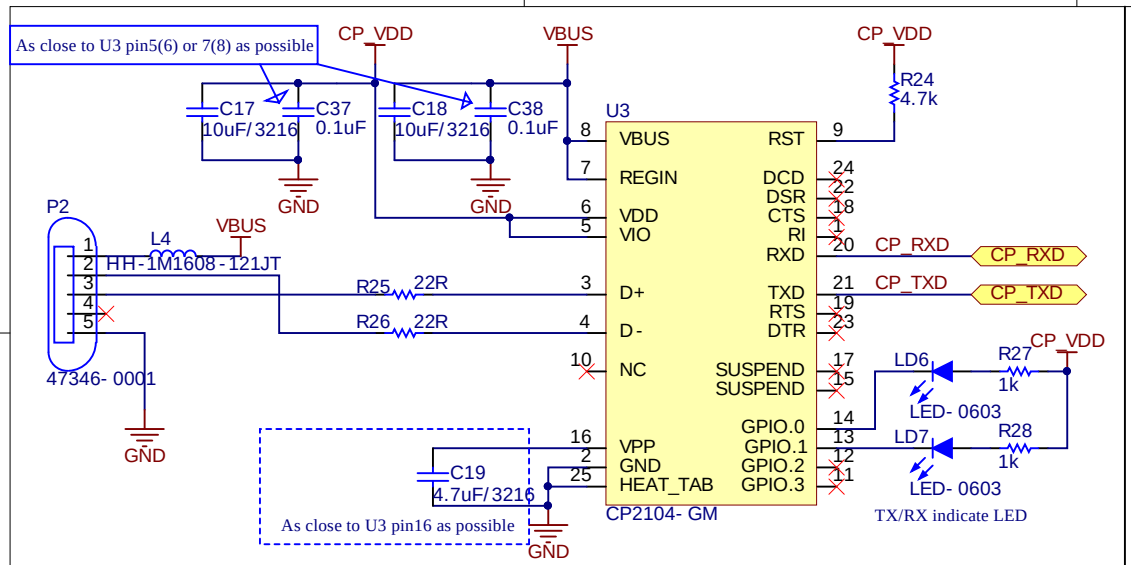

USB to UART

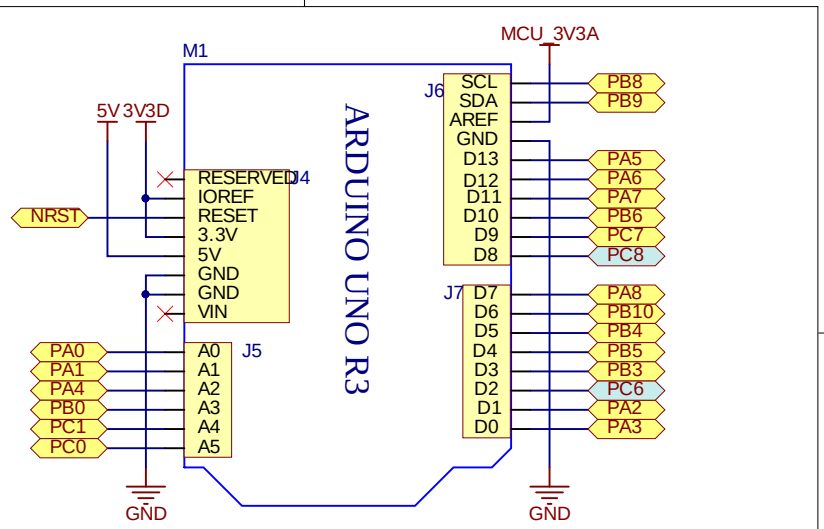

Ardiono pin

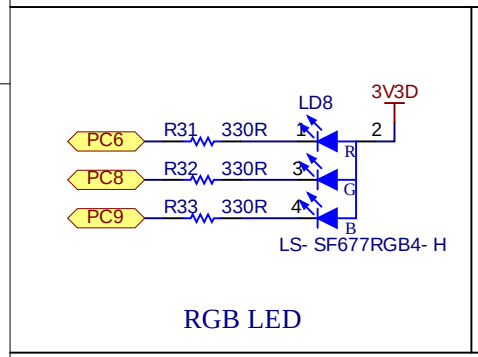

RGB LED

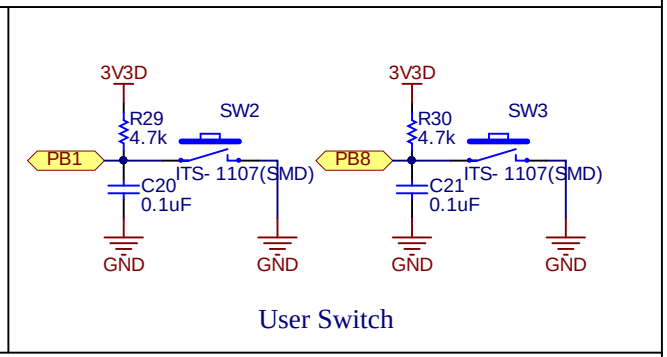

User Switch

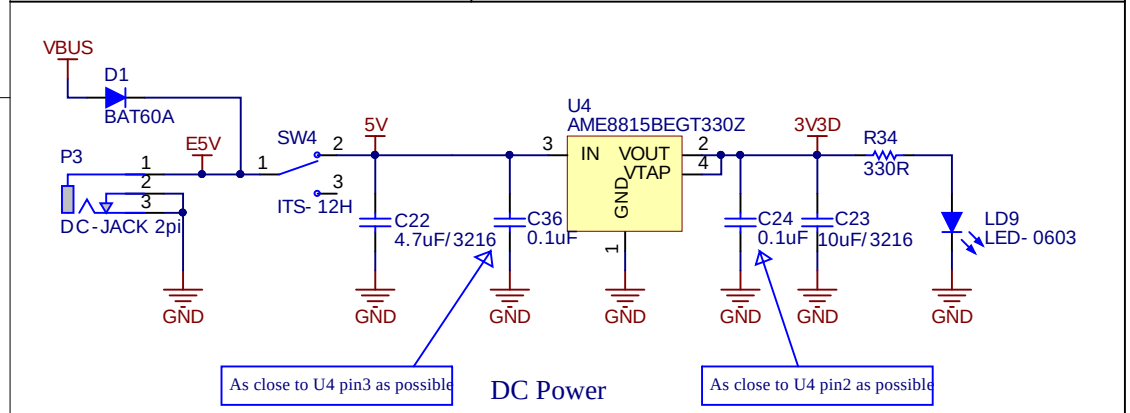

DC Power

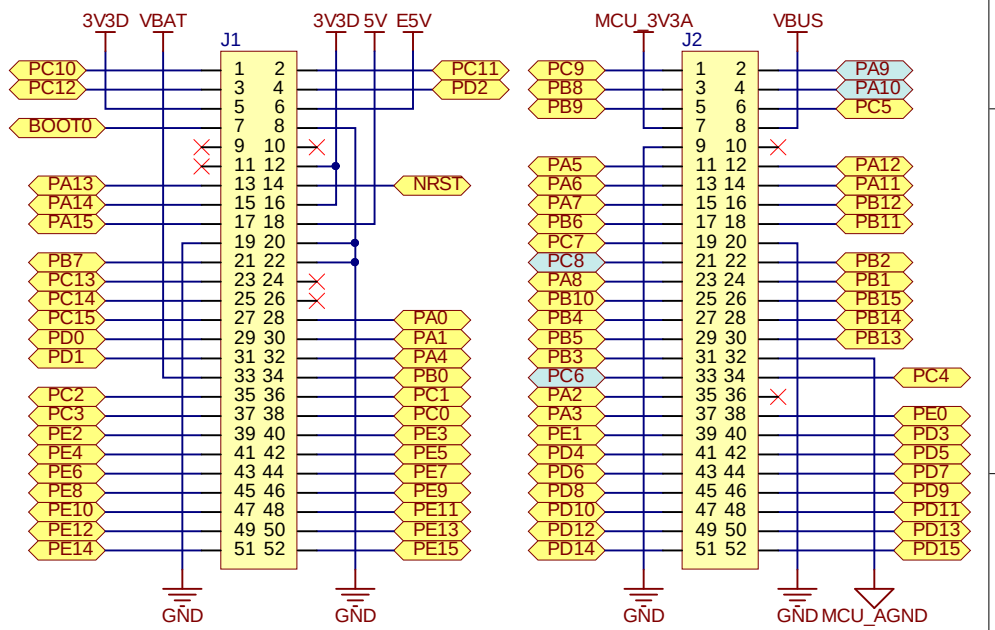

Pinout

Title	W6100-EVB	WIZnet Co., Ltd. 5F, Humax Village Hwangseaul-ro, Bundang-gu Seongnam-si, Gyeongi-do South Korea	WIZnet IOP IoT
Name 03.ETC.SchDoc	Revision: V100		
Date: 2018-09-27	Sheet 3 of 3		
Team Team CS	Drawn By Edward		