UNINTERRUPTIBLE POWER SUPPLY

MASTER HP

100 ÷ 250 kVA three phase output

User Manual

RPS SpA
Viale Europa 7
37045 Legnago (VR) Italy
www.riello-ups.com

Thank you for choosing our product.

RPS S.p.A. is highly specialized in the development and production of uninterruptible power supplies (UPS). The UPSs of this series are high quality products, carefully designed and manufactured to ensure optimum performance.

Symbols used in the manual

In this manual, some operations are shown by graphic symbols to alert the reader to the dangerous nature of the operations:

	Possibility of serious injury or substantial damage to the device, unless adequate precautionary countermeasures are taken.
	This symbol indicates some important information which must be read with care.
	It is recommended to read this part of the manual.

Protective equipment to be worn

No maintenance operations must be carried out on the device without wearing the Personal Protective Equipment (PPE) described below.

Personnel involved in the installation or maintenance of the equipment must not wear clothes with wide sleeves or laces, belts, bracelets or other items that may be dangerous, especially if they are metallic. Long hair must be tied in such a way as to ensure that it is not a hazard.

The following signs show the protective equipment that should be worn. The various items of PPE must be selected and sized according to the nature of the hazard (particularly electrical) posed by the equipment.

	Accident prevention footwear Use: always		**Protective eyewear** Use: always
	Protective clothing Use: always		**Helmet** Use: When there are suspended loads
	Work gloves Use: always		

Definition of “operator” and “specialized technician”

The professional figure responsible for accessing the equipment for ordinary maintenance purposes is defined with the term ***operator***.
This definition covers personnel that know the operating and maintenance procedures for the equipment, and that have been:

1. trained to operate in accordance with the safety standards relating to the dangers that may arise where electrical voltage is present;
2. trained to use Personal Protective Equipment and to carry out basic first aid.

The professional figure responsible for the installation and start-up of the equipment, and for any extraordinary maintenance, is defined with the term ***specialized technician***.
This definition covers personnel that, in addition to the requirements listed above for a general operator, must also:

1. have been suitably trained by the manufacturers or their representative.
2. be aware of installation, assembly, repair and service procedures, and have a specific technical qualification.
3. must have a background of technical training, or specific training relating to the procedures for the safe use and maintenance of the equipment.

Emergency interventions

The following information is of a general nature.

First aid interventions

Company regulations and traditional procedures should be followed for any first aid intervention that may be required.

Firefighting measures

1. Do not use water to put out a fire, but only fire extinguishers that are suitable for use with electrical and electronic equipment.
2. If exposed to heat or fire, some products may release toxic fumes into the atmosphere. Always use a respirator when extinguishing a fire.

GENERAL PRECAUTIONS
This manual contains detailed instructions for the use, installation and start-up of the MASTER HP. Read the manual carefully before installation. For information on using the MASTER HP, the manual should be kept close at hand and consulted before carrying out any operation on the device.

This device has been designed and manufactured in accordance with the standards for the product, for normal use and for all uses that may reasonably be expected. It may under no circumstances be used for any purposes other than those envisaged, or in any other ways than those described in this manual. Any interventions should be carried out in accordance with the criteria and the time-frames described in this manual.

PRECAUTIONS AND SAFETY REGULATIONS
Refer to the **"Safety and Compliance Manual"** supplied with the UPS (0MNA141_NE).

ENVIRONMENTAL PROTECTION

In the development of its products, the company devotes abundant resources to analysing the environmental aspects.
All our products pursue the objectives defined in the environmental management system developed by the company in compliance with applicable standards.
No hazardous materials such as CFCs, HCFCs or asbestos are used in this product.
When evaluating packaging, the choice of material has been made favouring recyclable materials.
For correct disposal, please separate and identify the type of material of which the packaging is made in the table below. Dispose of all material in compliance with applicable standards in the country in which the product is used.

DESCRIPTION	*MATERIAL*
Box	Cardboard
Protective bag	Polythene
Accessories bag	Polythene

DISPOSING OF THE PRODUCT

The UPS contain electronic cards and batteries which are considered TOXIC and HAZARDOUS waste. When the product reaches the end of its operating life, dispose of it in accordance with applicable local legislation.
Disposing of the product correctly contributes to respecting the environment and personal health.

No reproduction of any part of this manual, even partial, is permitted without the RPS S.p.A. authorization. The RPS S.p.A. reserves the right to modify the product described herein, in order to improve it, at any time and without notice.

This page is left blank intentionally

CONTENTS

1. PRELIMINARY OPERATIONS 9

1.1 Removing the packaging and positioning the device 9

1.2 Storage 9

1.3 Handling 9

2. INSTALLATION ENVIRONMENT 10

2.1 Ambient conditions: 10

2.2 Dimensions of the premises 10

2.3 Cooling of the premises 11

2.4 Air change for battery premises 11

3. MASTER HP IN SINGLE CONFIGURATION 12

3.1 Set-up of the electrical system 12

3.1.1 Input 12
3.1.2 Selectivity 13
3.1.3 Differential (RCD) 14
3.1.4 Battery 15
3.1.5 Backfeed protection 15
3.1.6 Emergency power off device (EPO) 15

3.2 Mains, load and battery connections 16

3.3 Connection of signals and remote commands 19

3.3.1 Parallel (optional) 19
3.3.2 EPO connector (emergency power off control) 19
3.3.3 REMOTE COMMANDS AND ALARMS 20
3.3.4 RS232 21
3.3.5 SLOTS 2-1 , the following cards may be inserted (optional): 22
3.3.6 REMOTE ALARMS (2 optional cards) 22
3.3.7 MODEM (optional) 22
3.3.8 MULTI I / O (optional) 23
3.3.9 Battery temperature sensor (optional) 23
3.3.10 Dual Bus System – UGS (optional) 23
3.3.11 SWOUT and SWMB aux 23

3.4 Start-up procedure 25

3.4.1 Battery operation check 26

3.5 Operating modes 27

3.5.1 On - line - factory setting - 27
3.5.2 Standby-on / Smart active 27
3.5.3 Standby-off (with mains present the load is not powered) 28
3.5.4 Stabilizer (operation in on-line mode without battery) 28
3.5.5 Frequency converter (from 50 to 60Hz or vice versa) 28

3.6 Personalizations 29

3.7 Procedure to transfer the load from UPS onto maintenance by-pass. 29

3.8 UPS and load shutdown 30

3.9 Block diagram 31

3.10 Components of the block diagrams 32

4. MASTER HP IN PARALLEL CONFIGURATION 35

4.1 Introduction 35

4.2 Electrical system set-up *36*
4.2.1 Input *36*
4.2.2 Differential *36*
4.2.3 Emergency power off device (EPO) *36*
4.2.4 External maintenance by-pass. *37*
4.3 Mains, load and battery connections. *38*
4.3.1 UPS AC input / output power connection *38*
4.3.2 Power connections battery side. *39*
4.4 Connection of signals *41*
4.5 Start-up procedure *44*
4.6 Operating modes *45*
4.7 By-pass for maintenance *47*

5. MAINTENANCE* *51

6. GENERAL CHARACTERISTICS* *53

7. APPENDIX A - REMOTE COMMANDS AND ALARMS CARD -* *56

1. Preliminary operations

1.1 Removing the packaging and positioning the device

On delivery, the packaging must be inspected to ensure that it is whole and that it has not been crushed or dented. Check in particular that neither of the two impact resistant devices on the packaging is red; if one of them is red, follow the instructions on the packaging.
The essential details of the device are provided on the shipping document. The marking, weight and dimensions of the various items making up the packing list are shown.
Check the state of the device by means of a visual inspection of both the inside and the outside. Any dents seen mean that it has suffered knocks during shipping, which could compromise the normal operation of the device.

1.2 Storage

In the following situations:

- installation not immediately after delivery;
- de-installation and storage while awaiting relocation,

place the device in covered premises that are protected from direct contact with atmospheric agents and dust. The following environmental values are those allowed in the storage area:

Temperature:	-25 ÷ + 70 °C
Relative humidity:	30÷90 % max.

For the installation of a battery cabinet, if provided with the uninterruptible power supply, follow the instructions given in the specific manual.

The list of material provided may vary depending on the order specifications. As a general rule, the packaging should include the following: this manual, the installation drawing, the warranty and eventual accessories.

1.3 Handling

The equipment must only be handled by adequately trained personnel. It can be unloaded from the vehicle and put into place by lifting the box or the wooden deck to which the equipment is secured with a fork-lift truck. A transpallet or fork-lift truck should be used for the permanent positioning of the equipment, in accordance with the instructions provided below.

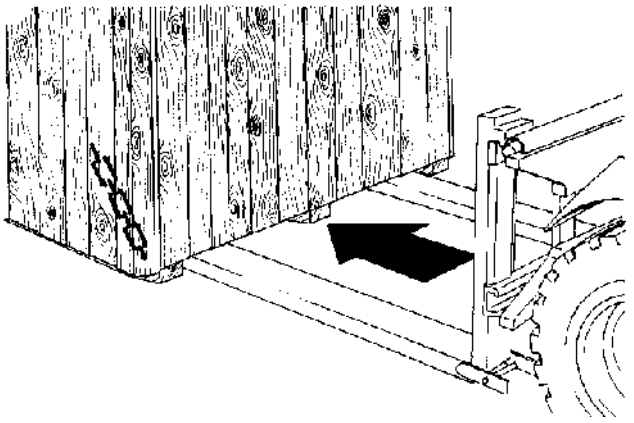

1 Insert the forks of the fork-lift truck in the lower part of the device, from the front or back, and ensure that they stick out about 30 cm on the other side.
If a transpallet is used, raise the device only as much as is strictly necessary.

2 Secure the device to the transpallet or fork-lift before moving it.

Risk of overturning
In order to avoid the risk of the device overturning, ensure that it is firmly secured to the transpallet or fork-lift truck by means of appropriate ropes before moving it.

When being moved the cabinet should be handled with care; knocks or drops can damage it. Once in position, remove the packaging carefully in order not to scratch the device.
The packaging should be removed as follows:

1. Cut the bands
2. Slide away the carton from above.
3. Remove the screws securing the cabinet to the wooden base.
4. If using a transpallet, remove the device from the pallet and set it on the floor, using the same precautions as set out in the section on Handling.

2. Installation environment

The MASTER HPand the battery cabinet have been designed for indoor installation. The choice of premises for installation should comply with the points set out below.

2.1 Ambient conditions:

- ensure that the floor can support the weight of the UPS and of any battery cabinet that may be used;
- avoid dusty environments;
- avoid narrow environments that could hinder normal maintenance operations;
- avoid placing the device in areas exposed to direct sunlight or heat;
- ensure that the ambient temperature conforms to the following:

minimum operating temperature:	*0 °C*
maximum temperature for 8 hours a day:	*+ 40°C*
average temperature for 24 hours:	*+ 35°C*

- max relative humidty: 90 % without condensation
- Max installation height: 1000 m at rated power
  (-1% power for every 100 m above 1000 m) max 4000 m

2.2 Dimensions of the premises

For the mechanical dimensions of the cabinets, refer to the ***"INSTALLATION DRAWINGS"*** supplied with the UPS and with the battery cabinet, if present. These drawings provide the following data:

- the position of the holes in the base to secure the device to the floor, if applicable;
- the view of the floor support for the sizing of a structure to raise the cabinet, if applicable;
- the position of cable entry;
- the position of the fans on the top of the UPS, for the positioning of a structure to convey the warm air discharged by the equipment outside the premises, if applicable;
- the input, output and battery cables section;
- the power dissipated by the equipment (kW).

2.3 Cooling of the premises

The recommended operating temperature for the lifetime of the UPS and of the batteries is between 20 and 25°C. The lifespan of the battery depends on the operating temperature; with an operating temperature of between *20°C and 30°C, the lifespan of the batteries is halved*.
A heat dissipation system is required to keep the temperature of the premises housing the equipment within the field 20÷25°C.

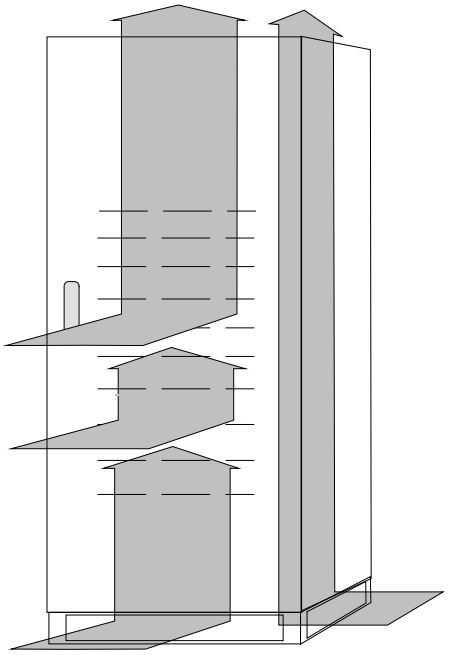

The heat dissipation needed for the correct operation of the UPS is brought about by the air current made by the fans located inside the UPS (forced convection) and by the air around the side panels (natural convection).

In order to ensure proper air circulation, and therefore the correct operation of the UPS, measures must be taken during installation to avoid any obstructions to the free circulation of air. These include the following:

- ensure a distance of at least 60 centimetres from the ceiling, so as not to hinder air extraction,
- leave a free space of at least one metre at the front of the equipment to ensure both the circulation of the air and installation and maintenance operations;
- With natural convection the thermal load is dissipated to the outside through the walls; thus a cabinet placed against a wall or in a hollow dissipates less heat than one located in a free environment.
  The following rule must be observed:

  leave at least one of the three side walls free: right, left or back.
- the side strips must not be mounted for installations where cabinets are placed side by side.

2.4 Air change for battery premises

The premises housing the battery cabinet must have sufficient air circulation to ensure that the concentration of hydrogen issued during battery charging is kept below the danger limit.
The air change in the premises should preferably be provided by natural ventilation, otherwise by forced ventilation.

The standard EN 50272-2 for air change envisages that the minimum opening must satisfy the following equation:

$$\mathbf{A = 28 \times Q = 28 \times 0.05 \times n \times Igas \times C10\ (1/10^3)\ [cm^2]}$$

where:
A = free opening for air intake and outlet
Q = flow of air to be removed [m³/h]
n = number of battery elements;
C10 = battery capacity over 10 hours [Ah]
Igas = current that produces gas [mA//Ah]
in accordance with the standard: Igas = 1 VRLA type battery (*)

(*) for open vase or nickel batteries, contact the battery manufacturer.

When the equation is applied for 240 element (40 battery) hermetically-sealed lead batteries:

$$\mathbf{A = 336 \times C10 / 10^3\ [cm^2]}$$

When using 120Ah batteries, the minimum aperture should be approximately:

$$\mathbf{A = 41\ [cm^2]}$$

The air intake and outlet must be positioned to ensure the best possible circulation; for example:
- apertures on opposite walls,
- a minimum distance of 2 m when they are on the same wall

.

3. MASTER HP in single configuration

3.1 Set-up of the electrical system

3.1.1 Input

The UPS input must have a max. current protection device for the section of line coming from the distribution panel as well as for the two inputs into the MASTER HP: the rectifier line and the by-pass line.
The protection device should be sized according to the situation, as follows:

a) Single power line

The fuse represented with the letter F alone provides the protection for all three lines mentioned above.

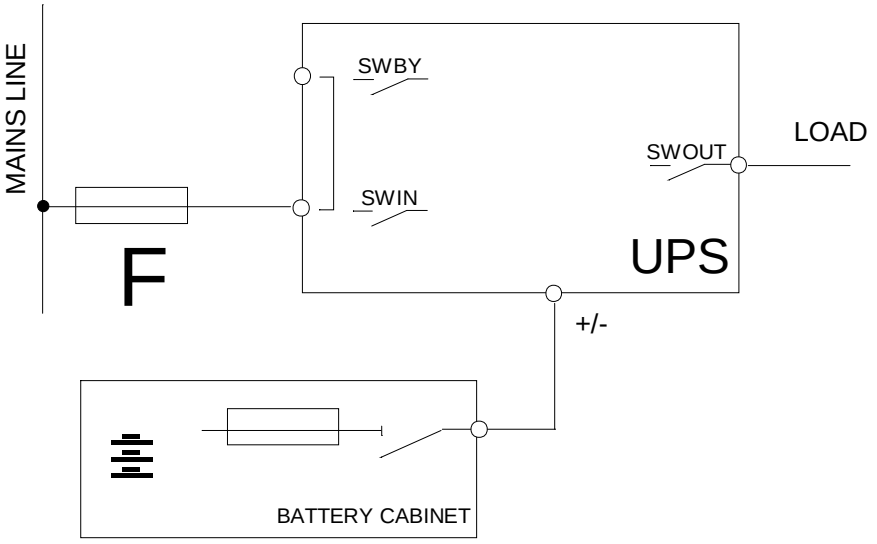

b) main power supply and separate by-pass

When there are two separate power lines, the main power line and the by-pass line, two protection devices must be provided (indicated with the letters **F** and **G** in the drawing b), one for each line.

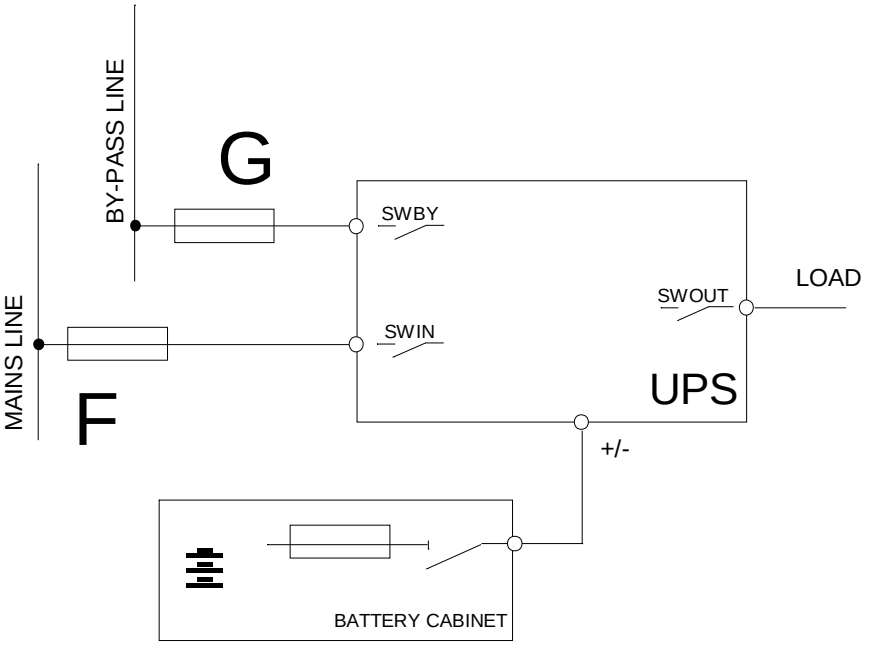

- table of connections-

		100kVA	120kVA	160kVA	200kVA	250kVA
Power line						
Imax (*)	[A]	159	190	254	317	397
External fuse [F] type gG	[A]	160	200	250	315	400
BYPASS (**)						
Current	[A]	145	173	231	289	361
External fuse [G] type gG	[A]	160	200	250	315	400
OUTPUT						
Current	[A]	145	173	231	289	361
BATTERY						
Permanent battery eq. Current	[A]	200	240	320	400	495

(*)100% load, nominal input voltage, battery charging; (**) inside the UPS, no max. current protection device is provided on the by-pass line, this protection must be provided in the system;

3.1.2 Selectivity

The system where the UPS is inserted must be set up in such a way that in the event of a shortcircuit on one of the lines downstream of the UPS, the fuse on the output opens while the upstream fuse normally works. This is known as selectivity, and ensures that the remaining feeders maintain the power supply.

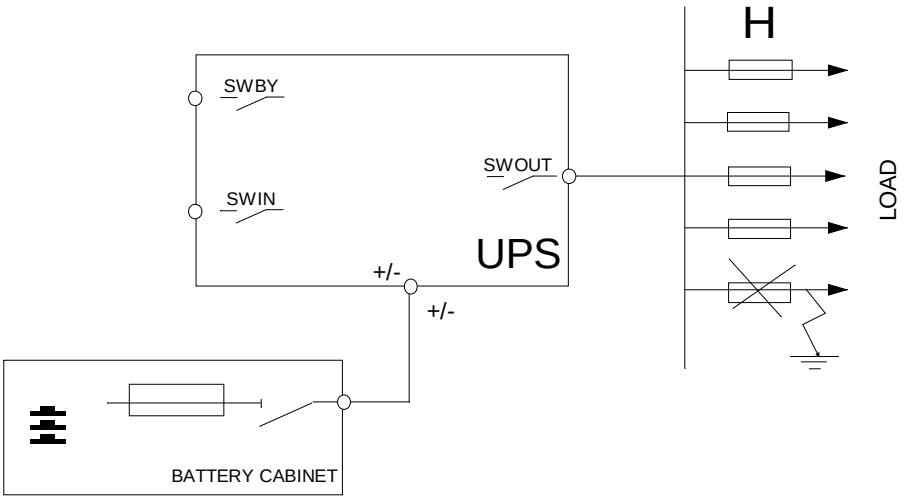

In order to select the correct protection devices to be inserted downstream of the MASTER HP, the following two operating modes have to be taken into consideration: ***mains power supply*** and ***battery power supply***.

With ***mains power supply*** the output fuse must be selective with the input fuse; the condition is verified for the following values:

		100kVA	120kVA	160kVA	200kVA	250kVA
rated output current:	[A]	145	173	231	289	361
type gG fuse used at the UPS input (as shown in the ***table of connections***)	[A]	160	200	250	315	400
maximum fuse at the UPS output for selectivity:						
fuse size for type gG fuse	[A]	100	125	160	200	250
fuse size for type aM fuse	[A]	63	80	125	125	160

At least two feeders are necessary in order to use the UPS at rated load with fuses of type gG.

With ***battery power supply*** ***(*** first fault) in the event of a shortcircuit on one of the outputs (second fault) it must be possible for the fuse to be open before the inverter shuts down.
If the shortcircuit is of the three-phase type, the inverter can supply a current for 1 second that is 1.8 times the value of the rated current of the UPS output (with a single phase shortcircuit the current is around 3 times the value).
In the worst-case scenario, that is a three-phase shortcircuit then a smaller current, the condition occurs if:

	100kVA	120kVA	160kVA	200kVA	250kVA
rated output current: [A]	145	173	231	289	361
shortcircuit current (three-phase)	1.8 times the rated output current for 1 second				
maximum fuse at the UPS output for selectivity:					
fuse size for type gG fuse [A]	40	40	63	63	80
fuse size for type aM fuse [A]	20	25	32	50	50

At least five feeders are necessary in order to use the UPS at rated load with fuses of type gG.

To sum up, when there is a shortcircuit on the output, there are two alternatives if only the line affected by the shortcircuit is to be isolated; let us consider the example of the 200kVA:

selectivity with both mains power supply and battery power supply;

the load has to be shared between at least five feeders, each sized at 20% of the rated power.

selectivity, with mains power supply only:

since it is considered unlikely that after a first fault a second fault will occur in the limited time of operation from the battery, it is sufficient to share the output between two lines, each sized for 50% of the rated power.

3.1.3 Differential (RCD)

If the MASTER HP protection against electric shock uses differential current devices (RCD), these have to have the following characteristics:

- Sensitivity 300mA
- sensitive direct current and unidirectional components (class A or class B)
- insensitive to transient current pulses
- delay greater than or equal to 0.1 s.

neutral

In the standard version without isolating transformer on the by-pass line, the neutral from the mains power supply is connected to the output neutral of the UPS.
THE ELECTRICAL SYSTEMS UPSTREAM AND DOWNSTREAM OF THE UPS ARE EXACTLY THE SAME

When operating in the presence of mains supply, a differential breaker (RCD) installed on the input will intervene as the output circuit is not isolated from the input circuit.
When operating without mains supply (from battery) the input differential breaker will intervene only if it is able to switch as a result of leakage current without any voltage at its poles (for example a differential breaker with an auxiliary relay is not suitable). However it is possible to install additional differential breakers on the output of the UPS, possibly coordinated with those on the input.

3.1.4 Battery

Battery cabinet
For connection to the UPS, the battery cabinet must have an overcurrent protection device and a disconnecting device. The disconnector may be closed ***only when*** the UPS is started up regularly; see the section "Start-up procedure" on page 25.

The function of the fuses is to protect the batteries and the cables from a shortcircuit between the battery cabinet and the UPS. The following rules should be observed for their sizing:

- ***if rapid fuses of the type gl / gG are installed***: the maximum size of fuse to be used is 2 times the battery capacity in Ah.
- ***If ultra rapid fuses of the type aR are installed***: the maximum size of fuse to be used is 2.5 times the battery capacity in Ah.

For example: the following fuses may be used for batteries of the type 150Ah: 250A type gl/gG or 315A type aR.

3.1.5 Backfeed protection

The MASTER HP is provided with a device to prevent voltage backfeed on the input line due to an internal fault. This protection device works by switching off the inverter if the current flow is faulty, thereby causing voltage backfeed on the by-pass line during operation from the inverter. If the fault occurs when the UPS is operating from the battery, the load will not be powered.

Should it be required to avoid the shutting down of the inverter in order to keep the load powered by the inverter even in the event of a double fault, the system can be customized to control the opening coil of a switch located upstream by reprogramming one of the relays on the "REMOTE COMMANDS AND ALARMS" card.

The control logic allows the function of the relay to be reconfigured, for example for the backfeed alarm, and then the free voltage contact can be used to control the triggering of a switch located on the UPS input.

3.1.6 Emergency power off device (EPO)

The UPS is pre-set to be connected to a remote emergency power off device as laid down in standard EN 62040-1-2. If the remote device (not supplied with the equipment) is activated, the inverter output voltage is cut.
The connection procedure is shown below.

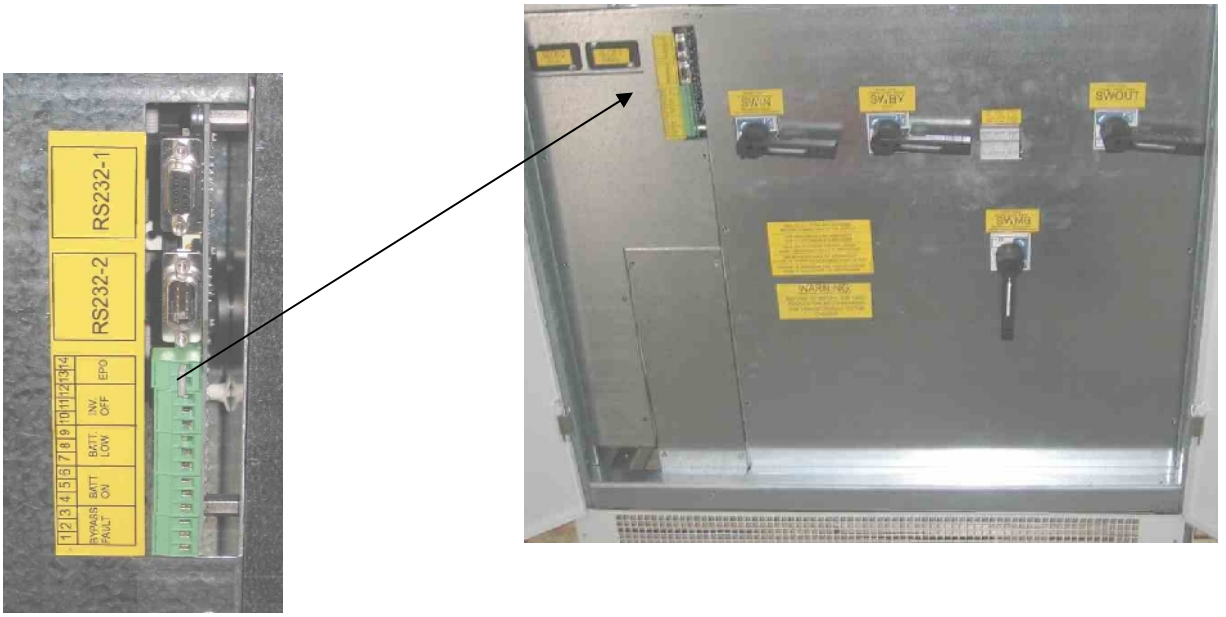

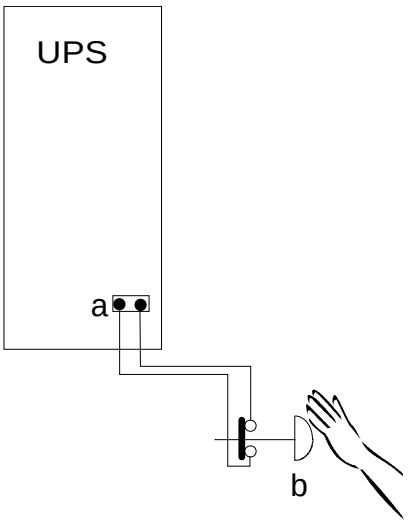

a - EPO terminal board located on the UPS
b - EPO switch (not provided).

On the MASTER HP, the jumper on the EPO terminals (page 19) must be removed, and the wires from the auxiliary contact of the button must be connected in place of the jumper.
The contact must be closed with the button in the rest position and must open when the button is pressed.

3.2 Mains, load and battery connections

The operations described in this chapter must be carried out exclusively by a ***specialized technician***.
The first connection to be made is the earth conductor.
The MASTER HP MUST NOT OPERATE WITHOUT AN EARTH CONNECTION

Before making the connection, open all the switches on the device and ensure that the UPS is completely isolated from the power sources: battery and AC power line. More specifically, check that:

- the UPS input line or lines are completely isolated;
- the battery cabinet disconnector / fuse (if present) is open;
- all the UPS disconnectors - SWIN, SWBY, SWOUT and SWMB - are in the open position (position 0);
- check with a multimeter that there are no dangerous voltages on the terminal board.

For connection of the power cables to the terminal boards, refer to the "INSTALLATION DRAWINGS" provided with the UPS and with the battery cabinet, if present.

Input neutral

The power supply to the MASTER HP input (by-pass line) must be three-phase with neutral.
The neutral conductor is necessary only on by-pass line.

Input line without neutral

The transformer must be inserted either on the mains supply line or on the by-pass line (as shown in the drawings).

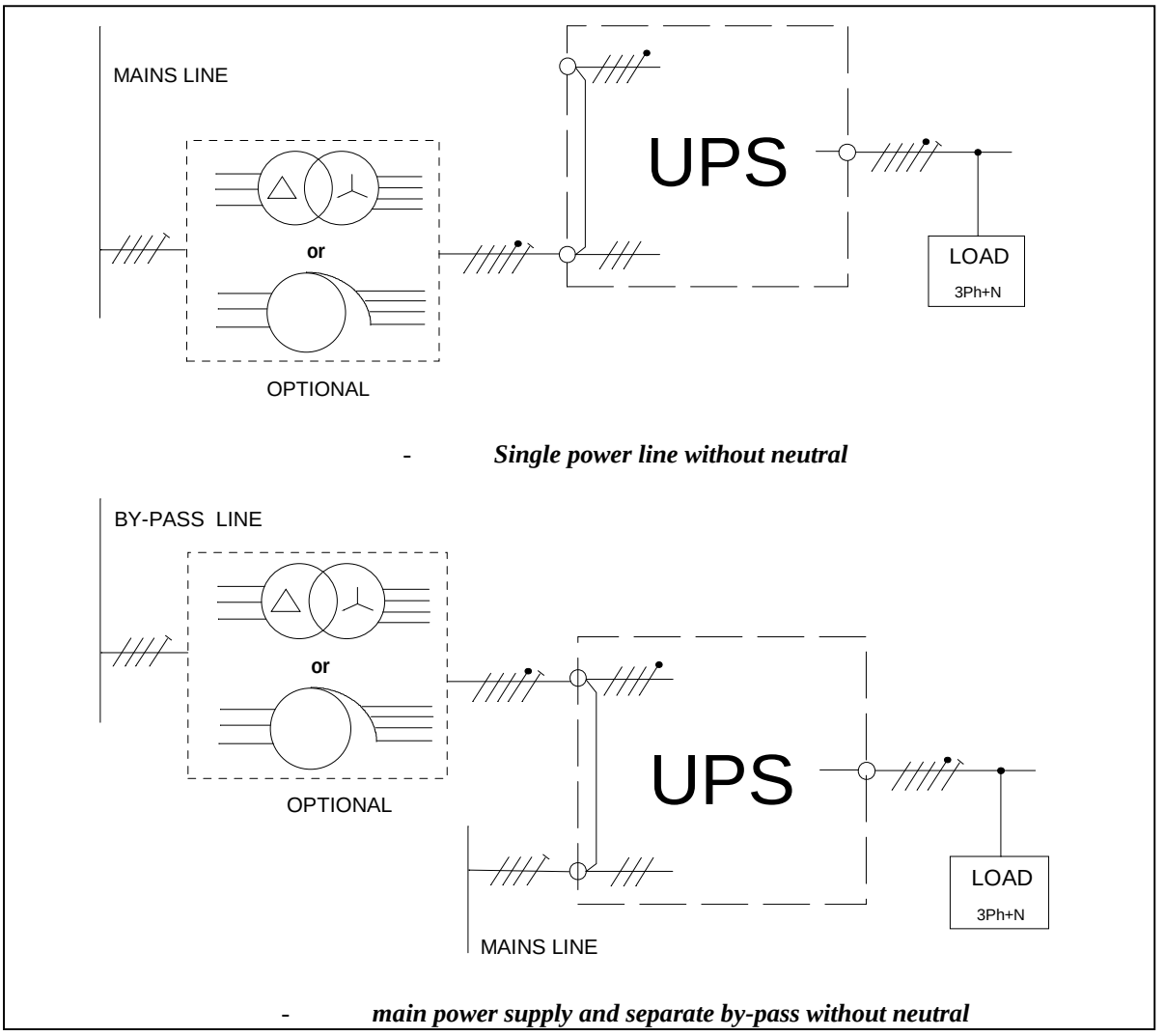

- ***Single power line without neutral***

- ***main power supply and separate by-pass without neutral***

Input and output line without neutral

If the input line and the load are ***three-phase without neutral*** type (and only in this case), a kit to create the signal neutral (optional) may be used. The kit may only be used by a specialized technician.

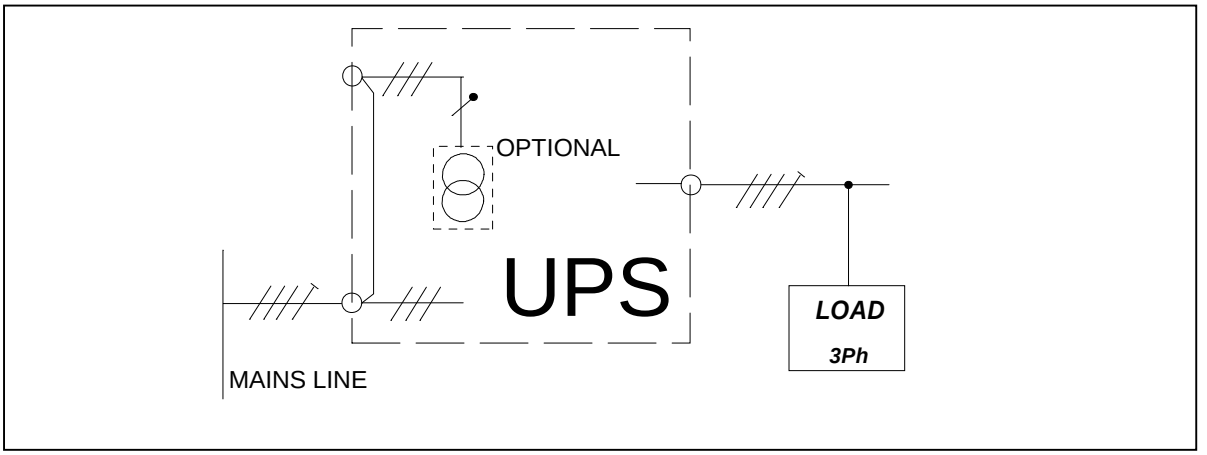

Battery connections

BATTERY CABINET if present:
The battery cabinet ***must*** be provided with a sectioning device to be connected to the UPS. This disconnector ***must*** be closed ***only when*** the UPS is started up regularly. During connection to the UPS the disconnector ***must*** stay in the open position.

Up to 3 battery cabinets can be connected in parallel, in accordance with the diagram below.

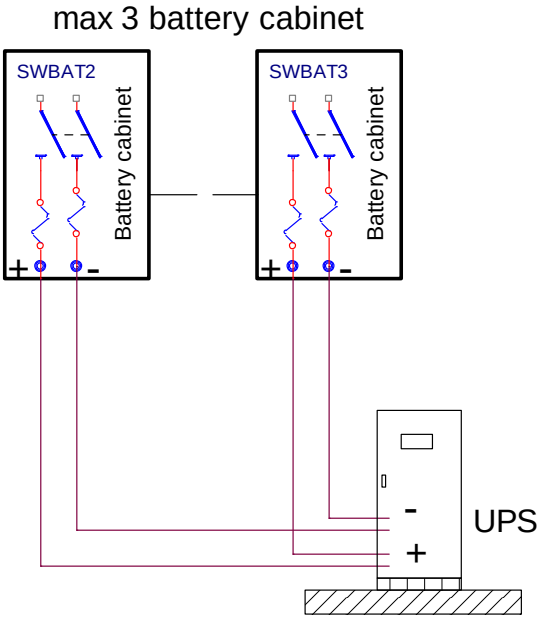

CABINET DISCONNECTOR
For systems with 4 or more battery cabinets, use a ***Battery switch cabinet*** where the cables can be parallel-connected (refer to the marketing department). For the sizing of the cables and connection procedures, refer to the "INSTALLATION DRAWING" attached to the battery cabinet.

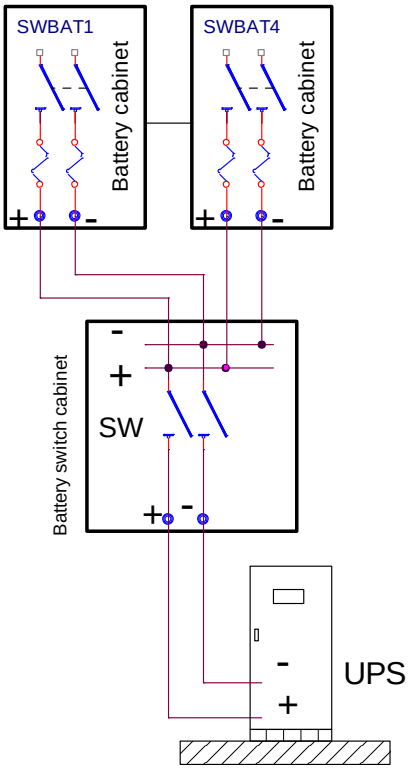

For back-up times requiring a greater number of Battery cabinets, contact the marketing department.

3.3 Connection of signals and remote commands

In order to access the interface cards, open the door and remove the protection panel secured with screws (K) as shown in the drawing:

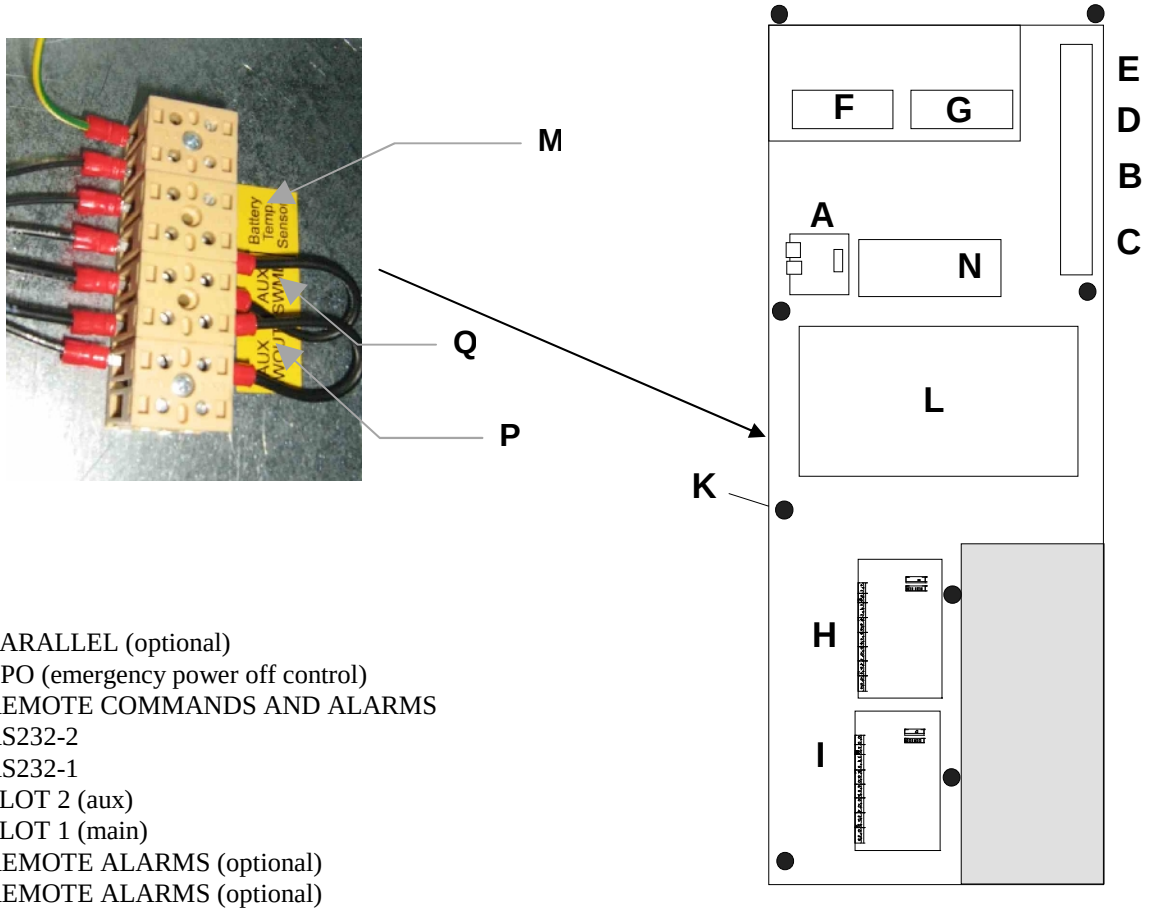

A- PARALLEL (optional)
B- EPO (emergency power off control)
C- REMOTE COMMANDS AND ALARMS
D- RS232-2
E- RS232-1
F- SLOT 2 (aux)
G- SLOT 1 (main)
H- REMOTE ALARMS (optional)
I- REMOTE ALARMS (optional)
L- MODEM (optional) or MULTI I/O (optional)
M- BATTERY TEMPERATURE SENSOR (optional)
N- UGS (optional)
P- SWOUT aux
Q- SWMB aux

3.3.1 Parallel (optional)

-A- To be used for the connection of UPSs in parallel configuration. See the chapter “parallel version” on page 35.

3.3.2 EPO connector (emergency power off control)

-B- If the jumper on the connector is opened, the voltage on the UPS output will be cut.
The UPS is factory-fitted with the EPO terminals shortcircuited. If this input is used, the UPS can be shut down in a hazardous situation from a remote position simply by pressing a button.
If only the power supply is removed, for example by opening the switch of the power supply panel, the UPS will keep the load powered using the energy in the batteries.

3.3.3 REMOTE COMMANDS AND ALARMS

-C- The card is equipped with a terminal board with 12 positions which has the following:

POWER SUPPLY	1 power supply 12Vdc 80mA(max.) [pins 10 and 11];
ALARMS	3 potential-free change-over contacts for alarms;
COMMAND	1 command programmable from the panel [pins 11 and 12];

The functions of the three contacts and the command may be reprogrammed via the display panel. The ALARMS and the COMMAND are factory-set in the following way:

- ALARMS

- RL1	Bypass / fault, the contact changes position when the UPS switches the load onto the by-pass line either during normal operation (e.g. due to overload) or as a result of a fault in the inverter stage;
- RL2	Battery discharging, the contact changes position when the load is powered from the battery due to a mains power failure;
- RL3	End of battery discharge, the contact changes position when, during a mains outage, the remaining time for battery discharge has reached the minimum value defined. Once this time has passed, the load will remain unpowered (the factory-set end of discharge pre-alarm value is 5 minutes);

- COMMAND

IN 1	Inverter OFF. Connect pin 11 to pin 12 (for at least 2 seconds) . - In “NORMAL OPERATION”, if the INVERTER OFF command is received, the UPS switches the power supply of the load onto the by-pass line (load is not protected should there be a mains outage). - In “EMERGENCY OPERATION”, if the STOP INVERTER command is received, the UPS shuts down (load is not powered). With the jumper present, the UPS remains switched on the by-pass line when the mains power supply is restored. With no jumper present, the UPS will restart in NORMAL OPERATION.

The position of the contacts shown is without the alarm present. **The contacts can take a max. current of 1A with 250Vac.**

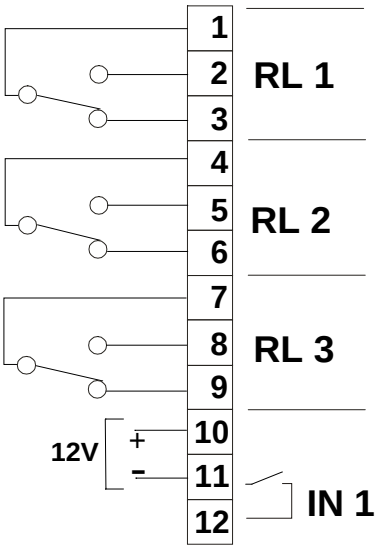

Please refer to APPENDIX A for the list of alarms and commands that can be programmed. The change of function may be made by the technical support personnel.

3.3.4 RS232

2 DB9 connectors are available for RS232 connection. The factory-set transmission protocol is the following:

9600 baud, -no parity, -8 bits, -1 stop bit.

The transmission speed may be varied from 1200 to 9600 baud, using the PERSONALIZATIONS menu on the CONTROL PANEL. Depending on the distance of transmission, the recommended values for the transmission speed are: 9600 baud 50m, 4800 baud 100m, 2400 baud 200m, 1200 baud 300m.
See the diagrams below for the connection procedure.

DB9 female RS232-2

-D- For connection with a computer use a standard RS 232 cable. See the diagram for connection with a modem.

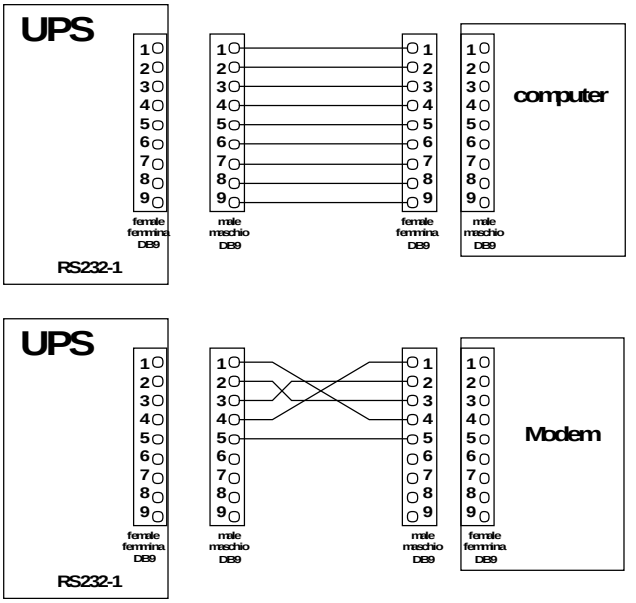

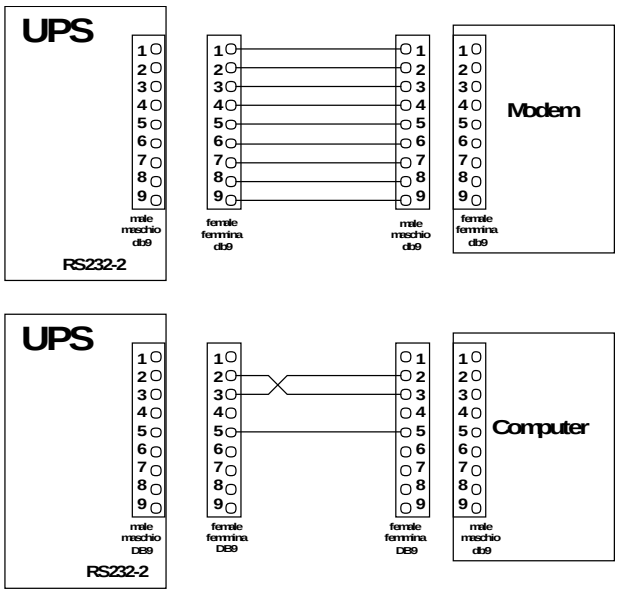

DB9 male RS232-1

- E - For connection with a modem use a cable standard.
See the diagram for connection with a modem.

3.3.5 SLOTS 2-1 , the following cards may be inserted (optional):

-F, G- NetMan 102 Plus (on SLOT 1 main or SLOT 2 aux)
Device for the management of the UPSs on the Ethernet. It can send information on the status of the device with various protocols:

TCP/IP UDP (compatible with Watch&Save);
SNMP (for communications with NMS or with PowerNETGuard);
HTTP (to display the status with a browser);
TFTP (to configure or update the device when connected to the network).

The main function of this device is to integrate the MASTER HP into the LAN network ensuring a high level of reliability of communication with the server to enable full management and control of the MASTER HP.

- MULTICOM card (on SLOT 1 main or SLOT 2 aux)
This device may be used to:

- add a serial port to the UPS;
- monitor the UPS using MODBUS/JBUS protocol on RS485 or PROFIBUS (Multicom 401)

N.B. each card connected precludes the use of a standard RS232 port, as follows.
the use of SLOT 2 (aux) inhibits the use of RS232-2

For the full and updated list of communication accessories, please see the website www.riello-ups.com

3.3.6 REMOTE ALARMS (2 optional cards)

- H, I - 6 outputs: potential-free contacts for alarms (programmable from the display panel), 2 inputs (programmable from the panel) and 1 12V DC maximum 100mA auxiliary input.

3.3.7 MODEM (optional)

-L- Model compatible with the communication standards between the MASTER HP and the software provided.
N.B. the modem must be connected to an RS232 port (D and E), a standard RS232 port may not therefore be used.

3.3.8 MULTI I / O (optional)

-L- The function of this accessory is to convert external signals from the MASTER HP (e.g. temperature of environment, temperature of battery premises, etc.) into signals by means of relay contacts or via serial output RS485 in MODBUS protocol.
It has the following characteristics:

- 8 inputs (e.g. humidity, smoke, etc. sensors)
- communication with the UPS via serial port
- 8 relays configurable with 8 events on the MASTER HP
- RS232 output port with configurable messages
- RS 485 output port MDBUS /JUBUS with configurable messages.

3.3.9 Battery temperature sensor (optional)

-M- The UPS has a connector for connection of the kit, which consists of a sensor to be placed inside the battery cabinet. The use of the temperature sensor allows the UPS control logic to regulate the values of the charge and maintenance voltage according to the working temperature of the battery.

3.3.10 Dual Bus System – UGS (optional)

-N- Two independent systems may be configured with Dual Bus with a single source or a separate source.
The synchronization option (UGS) keeps the outputs of the two systems always synchronized, regardless of the input variations and when the system is running from the battery. Each system may be made up of a maximum of 4 parallel-connected UPSs. This system has been designed for configurations using STSs (Static Transfer Switches) since this guarantees switching from one uninterruptible source to another without affecting the loads.

3.3.11 SWOUT and SWMB aux.

-P, Q- Terminals to be used for the connection of the auxiliary contacts of switches inserted in the MASTER HP system, see also the section on “Insertion of additional system sectioning devices” on page 37.
Inserting additional disconnectors to supplement those already in the UPS means that the whole equipment can be replaced without interrupting the power supply to the load.

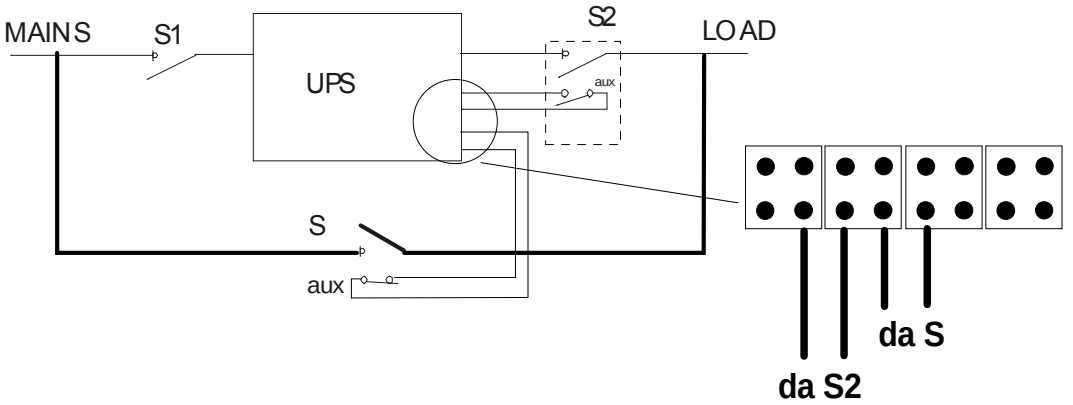

Additional output disconnector S2, additional disconnector S of the external maintenance by-pass.
The auxiliary contacts S2 and S must be connected to terminals P and Q.
For safe removal, place the UPS onto by-pass, close S, open S1 and S2 and disconnect the UPS.
Contact S2 must be in the same position as the switch while S must be in the opposite position (auxiliary open with switch closed, vice versa with switch open)

This page is left blank intentionally

3.4 Start-up procedure

mains power supply

The mains power supply has to be present in order to start up the MASTER HP

The MASTER HP output terminals will be powered in this phase and all applications connected will receive voltages. All users must therefore be warned before carrying out the start-up procedure.

BATTERY CABINET if present:

The battery cabinet ***must be*** provided with a sectioning device for it to be connected to the UPS. This disconnector ***must*** be closed ***only when*** the UPS is started up regularly. During the UPS start-up phase the disconnector ***must*** remain in the open position.

Once the INPUT/OUTPUT and battery cables have been connected to the UPS terminals and before putting the switch cover back in place, check that:

- all the input/output terminals are securely tightened;
- all the fuseholders have the fuse inserted, and are in the closed position;
- the input and output protection conductor is connected correctly (yellow/green earth cable);
- check the polarity of the battery connections.

Replace the switch cover.
For the first start-up, the following operations should be carried out in this order:

1) close input disconnector SWIN,
2) press button 1 twice, select the language and then press button 8 to return to the basic menu,
3) after a few seconds, messages on the status of the UPS will start to be shown on the first line of the display panel; these will include the following message relating to the battery disconnector:
Wait: DO NOT connect the BATTERY
4) close by-pass line disconnector SWBY,
5) close output disconnector SWOUT.
6) do not close the battery cabinet disconnector

Once these operations have been carried out, the humming of the fans and the sound of the buzzer will be heard.

Close the battery cabinet disconnector or fuses ***only when the following message is no longer shown*** on the first line of the display panel**:**

Wait: DO NOT connect the BATTERY

Configure the value of the battery capacity according to the instructions on "Display and control panel" user manual.

battery capacity

It is important to insert the correct battery capacity value, since this value is used by the system logic to calculate the backup time.
If not set otherwise, this value is assumed to be equal to the UPS power. e.g. at 100kVA the value set by default is 100Ah .

After the start-up operations have been completed, perform a manual battery test:
press button 3 and then 2 on the control panel. At the end of the test, after approx. 8 seconds, with the UPS started correctly and with the battery connected on the signals and control panel, the two green input and output LEDs must be on constant.

SWMB

The disconnector SWMB must not be closed during normal operation of the MASTER HP.
SWMB should only be closed during UPS maintenance operations in order to keep the load powered (see the instructions on page 29).

When the UPS is first started up, it is in on-line mode (see page 27). See pages 27 to set Standby-on / Smart active operating mode.

configurations
Contact the technical support personnel for other operating modes.

Once the UPS has been installed, check that the message NORMAL OPERATION appears on the first line of the display panel and that the UPS model is displayed in the left-hand corner of the second line according to the coding shown below:

X000YZZ

X MASTER HP model

000 output power [kVA]

Y output frequency:

Y = _	output 50Hz
Y = A	output 60Hz

Z configuration mode:

Z = __	output frequency = input frequency
Z = _ C	frequency converter with battery
Z = KS	frequency converter without battery
Z = N	standby on
Z = F	stand by off
Z = S	stabilizer
Z= P or p	parallel version
Z= B or b	parallel version with single battery

3.4.1 Battery operation check

Carry out only with battery present.

After installation, a mains outage even of just a few seconds can be simulated to check operation (the battery does not need to be charged).

With the UPS in normal operation, open switch SWIN located at the UPS input (rectifier). The buzzer should sound immediately (with 5=ON) while OUT. (green LED) and BATT. (yellow LED) on the Signals and Commands Panel should be constantly on.
Check that the load connected to the UPS is powered. In this state, the power supplied to the load is the same as the energy that was previously accumulated in the batteries. Close input disconnector SWIN to return to normal operation. The IN. and OUT. LEDs on the CONTROL PANEL will be GREEN.
The batteries will recharge automatically.

Battery backup time
Before a battery discharge test can be carried out, several hours have to pass (at least eight hours for standard backup times or longer for batteries sized for long backup times) to allow the batteries to charge. The backup time obtained on the first discharge may be slightly less than expected; a number of charge and discharge cycles are needed to improve this value. Battery capacity does not remain constant over time, but increases after some charge and discharge cycles; it then remains constant for several hundreds of cycles before decreasing permanently.

3.5 Operating modes

The various equipment operating modes are described below.

setting
The operating mode is set when the MASTER HP is installed; it may be changed subsequently but this should always be done by a ***specialized technician.***

3.5.1 On - line - factory setting -

load always powered by inverter, in the event of an input mains failure the load continues to be powered from the inverter using the energy stored by the batteries.

On – line:

The load is always powered by the inverter, with stabilized voltage and frequency, using the energy from the mains power supply (INPUT). If there is a fault in the INPUT, the UPS will switch to the batteries in zero time and the batteries will supply energy to the inverter to keep the load powered (for the backup time of the batteries). When the INPUT is restored the batteries will be automatically recharged by the rectifier.

3.5.2 Standby-on / Smart active

load powered from the mains, in the event of an input mains failure the load is powered from the inverter using the energy stored by the batteries.

In ***Standby On*** or ***smart active***, the load is powered from the by-pass line (if the power supply line is in the acceptance field); if there is a fault on the power supply line, the load switches automatically onto the inverter, powered by the battery

Standby On:

the switch from inverter to by-pass line may be immediate (time set = 0) or delayed (up to 180 minutes). For the switch to take place, the by-pass line has to remain in the acceptance field for the time set. In ***Standby On*** mode, the rectifier remains powered and keeps the batteries charged. If the by-pass line voltage or the frequency go out of the acceptance field, the load is automatically switched onto the inverter output. With ***Standby On*** operation, the energy dissipated by the system can be reduced, leading to considerable saving. Before using this function it must be ensured that, in the event of a mains outage, the load powered can accept an interruption of the power supply of around 2-5 ms, and that it can support any mains interference.
This operating mode is normally used for loads that are not particularly sensitive.
The letter ***N*** will be displayed on the second line of the BASIC MENU, near the UPS model.

Smart Active:

the UPS autonomously activates ***On-Line*** or ***Standby-On*** operation according to the quality of the power supply (see the "PERSONALIZ. SMART ACTIVE OPERATION" menu). When Smart Active mode is activated, the power supply is monitored for a few minutes, after which, if the voltage has remained within the pre-set values, the output is switched onto the by-pass line; otherwise the load remains powered by the inverter, while the observation time is approx. one hour. After this time, provided there has been no interference, the load switches onto the by-pass line; otherwise the logic starts monitoring again for approx. one hour. The advantage of this operating mode is its efficiency, which is greater than 98%.
SMART A will be displayed on the first line of the BASIC MENU, and the letter ***M*** will appear in the second line of the BASIC MENU, near the MASTER HP model.

3.5.3 Standby-off (with mains present the load is not powered)

load not powered, in the event of an input mains failure the load is powered from the inverter using the energy stored by the batteries.

Standby-Off:

if there is a mains power supply, UPS output is zero. The RECTIFIER remains on and keeps the battery charged. The output voltage is only present when the mains power supply fails. The system remains with output voltage = 0V while the voltage and the input frequency are within the acceptance field. When the power supply line is restored, the UPS is automatically repositioned in ***Standby-Off*** mode.
The letter ***F*** will be displayed on the second line of the BASIC MENU, near the UPS model.

3.5.4 Stabilizer (operation in on-line mode without battery)

load powered from the inverter, if there is a mains failure the load is not powered, the batteries are not present.

Stabilizer:

The load is always powered through the inverter, with stabilized voltage and frequency, using the energy from the input mains. The batteries are not present. In the event of an input mains failure, the output of the STABILIZER is not powered.
The letter ***S*** is displayed on the second line of the BASIC MENU, near the UPS model.

3.5.5 Frequency converter (from 50 to 60Hz or vice versa)

load powered from the inverter with output frequency different from the input frequency; in the event of an input mains failure the load may be powered from the inverter using the energy stored by the batteries, if present.

Frequency converter:

MAINS present, load powered. The load is always powered through the inverter, with stabilized voltage and frequency, using the energy from the input mains. The by-pass line is disabled and must not be connected (the connections between the main supply line and the by-pass line on the input bars must be removed).

SWMB

Do not use disconnector SWMB when the UPS is configured as a Frequency Converter.
N.B.: the disconnector can be padlocked in order to ensure that it is not used.

3.6 Personalizations

Using the CONTROLS PANEL (from the basic menu press keys 3 and 5 and the access code 436215), the following factory-set electrical parameters can be modified within a certain field:

- Language,
- value of the RATED VOLTAGE OUTPUT,
- BATTERY parameters,
- end of battery discharge pre-alarm,
- shutdown due to power lower than a set value,
- daily programmed shutdown,
- acceptance frequency and voltage field on the BY-PASS line,
- by-pass frequency field,
- modem configuration,
- RS232-1 and RS232-2 ports.
- standby-on operation,
- Smart active operation,
- date and time.

3.7 Procedure to transfer the load from UPS onto maintenance by-pass.

Procedure not applicable in the frequency converter

With several MASTER HPs connected in parallel, follow the procedure described in the section on “bypass for maintenance” of chapter “Parallel version”.

The sequences of operations to be carried out to place the UPS in maintenance bypass are shown below. The procedure varies depending on the initial state of the UPS.

- MASTER HP in NORMAL OPERATION

procedure a) *the power supply to the load is not interrupted in any way*;

- MASTER HP with output not synchronized with the by-pass line

procedure b) *the power supply to the load is interrupted*
(therefore this operation should be effected only if absolutely necessary).

Procedure a)

the by-pass line is present and its frequency and voltage are suitable *the UPS display panel indicates* NORMAL OPERATION.

1) close disconnecting switch SWMB (the control logic automatically disables the inverter)
2) open all the switches on the device (SWIN, SWOUT, SWBY and the battery cabinet disconnectors/fuses) and keep only disconnecting switch SWMB (maintenance by-pass line) closed. The control panel remains off.

N.B.: After carrying out the operations indicated above, personnel must wait around ten minutes for the capacitors to discharge before working on the inside of the UPS.

In this situation (during maintenance operations), any disturbance (such as a blackout) on the UPS supply line would have an effect on the equipment powered (since the batteries are deactivated in this state).

Procedure b)

The by-pass line is outside the acceptance field; the following message is seen on the display panel:
BYPASS VOLTAGEFAIL or SWBY OFF and green LED 1 will flash

1) open all the switches on the device (SWIN, SWOUT, SWBY and the battery cabinet disconnectors/fuses). The control panel will remain off.
2) before closing switch SWMB to connect the loads, ensure that both the frequency and voltage of the supply line are sufficient to power the connected loads.

N.B.: After carrying out the operations indicated above, personnel must wait around ten minutes for the capacitors to discharge before working on the inside of the equipment.

After all the maintenance operations, restart the UPS following the instructions in the section on START-UP PROCEDURE (see page 25). Then open disconnector SWMB (if it was previously closed).
The MASTER HP will return to NORMAL OPERATION.

3.8 UPS and load shutdown

This operation will cause the shutdown of the load connected on the output. In parallel versions each procedure must be carried out on all the UPSs:

open the switch of the load;
open SWOUT, output disconnector;
open SWIN, input disconnector;
open SWBY, by-pass line disconnector;
open the battery cabinet switch/fuse.

The load is no longer powered, and after a few seconds the signal panel will also shut down.
Use a multimeter to check that no voltages are present on the terminal board.
N.B.: the neutral is not interrupted by the UPS (the input neutral is also present at the UPS output).

Follow the instructions in the section on START-UP PROCEDURES (see page 25) to restart the UPS.

3.9 Block diagram

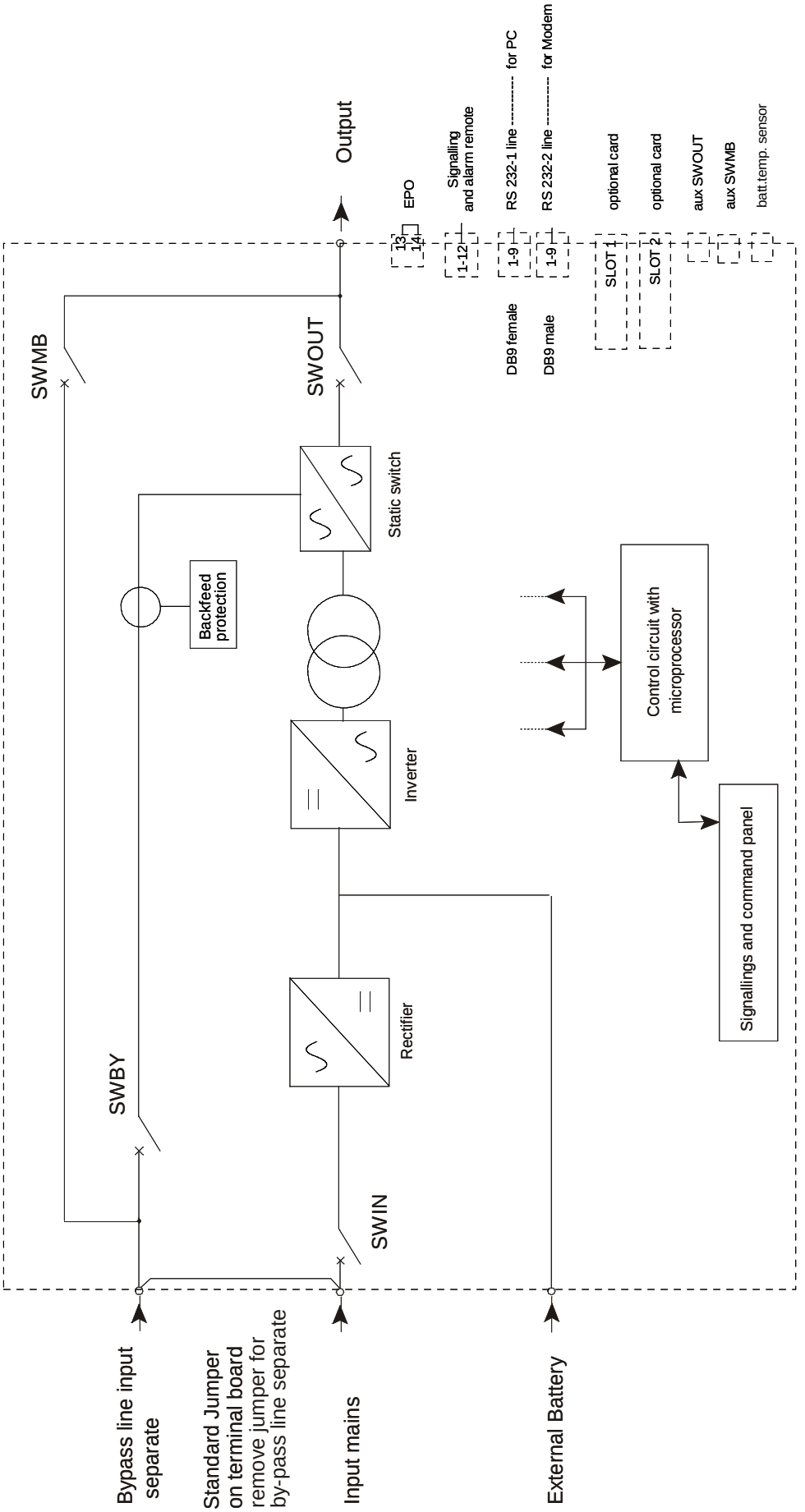

3.10 Components of the block diagrams

The MASTER HP is made up of the following sub-assemblies:

IGBT RECTIFIER

This represents the input stage and its function is to convert the alternating voltage of the power supply line into direct voltage.

Rectifier start-up can be programmed from the display panel. The following in particular can be set:
The delay in start-up t0 –t1;
(this allows a non simultaneous start-up of several UPSs connected to the same mains);
The time for the start-up, t1 – t2;
(this avoids oversizing any generator that may be located at the UPS input).

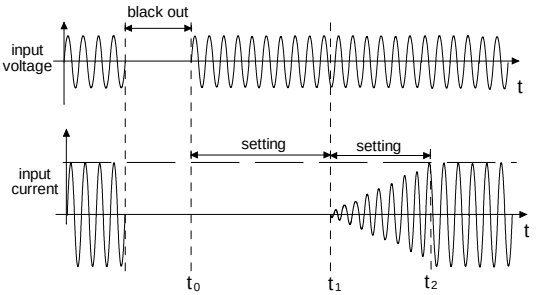

The rectifier carries out the following functions:

- feeds the inverter with direct voltage;
- automatically charges the battery;
- optimizes the input power factor by means of an automatic charging system.

The system for the cyclical recharging of the battery has two phases.
The first phase consists in recharging the battery with limited current and increasing voltage (up to the preset charge value “Vb_max”). This phase is maintained until the battery is fully charged (Batt=100%Ah), which is detected by measuring the current entering the battery.
In the second phase, with the battery fully charged, the battery charger is deactivated so as to remove any residual current in the battery in order to lengthen its lifespan and to prepare the rectifier for the optimization of the input power factor.

A cycle is also automatically effected to check the state of charge and to reintegrate the normal battery auto discharge.

BATTERY

This is the energy reserve to power the load when power is no longer supplied to the UPS. It is housed in one or more additional cabinets. The battery cabinet ***must be provided with*** a sectioning device and a protection device (magneto-thermal switch or disconnector with fuses).

The load is powered with the energy accumulated in the battery when there is no MAINS present (black out), or when the mains goes outside the acceptance field (frequency or voltage). In this phase of operation the energy required by the equipment connected to the UPS output is supplied by the battery, which has previously been charged. The alphanumeric PANEL at the front of the UPS shows the expected residual BACKUP TIME, calculated according to the power supplied and the state of charge of the batteries. The value provided is merely indicative, since the power required by the connected load may change during discharging. The backup time can be increased by disconnecting some of the connected equipment. When the remaining backup time goes lower than the value preset as the END OF BACKUP TIME PRE-ALARM (factory-set at 5 minutes), the buzzer increases the sound frequency while the yellow BATTERY LED starts flashing; in these conditions it is advisable to save any work in progress. After this time the MASTER HP will interrupt the power supply to the loads.
When the MAINS is restored, the UPS automatically restarts and starts recharging the batteries.

INVERTER

This is the output stage, the function of which is to convert the direct voltage from the RECTIFIER or from the BATTERY into stabilized sinusoidal alternating voltage. The inverter output is isolated from the input and from the batteries by a galvanic isolation transformer.The inverter is always working, since the load connected to the UPS output is always powered by the INVERTER (in NORMAL OPERATION)

STATIC SWITCH

This device allows the synchronized switch, automatic or manual, and in zero time, of the power supply to the load from a protected line (inverter output) to an unprotected line (by-pass line) or vice versa.

The MASTER HP is provided with a device to prevent the backfeed of voltage to the input line after an internal fault, known as "***BACKFEED PROTECTION".***

MANUAL MAINTENANCE BY-PASS (SWMB)

This is a maintenance disconnector. The UPS can be excluded by closing SWMB and opening the other disconnectors SWIN, SWBY, SWOUT while keeping the load on the output powered. This operation is necessary when maintenance operations must be carried out inside the equipment without interrupting the power supply to the load.

The disconnector is sized for the rated power of the UPS.

This page is left blank intentionally.

4. MASTER HP in parallel configuration

4.1 Introduction

MASTER HPs may be connected in a parallel configuration to increase both the reliability of the power supply to the load and the power available in output. Up to 8 UPSs can be parallel-connected. It is recommended to connect units of the same power.

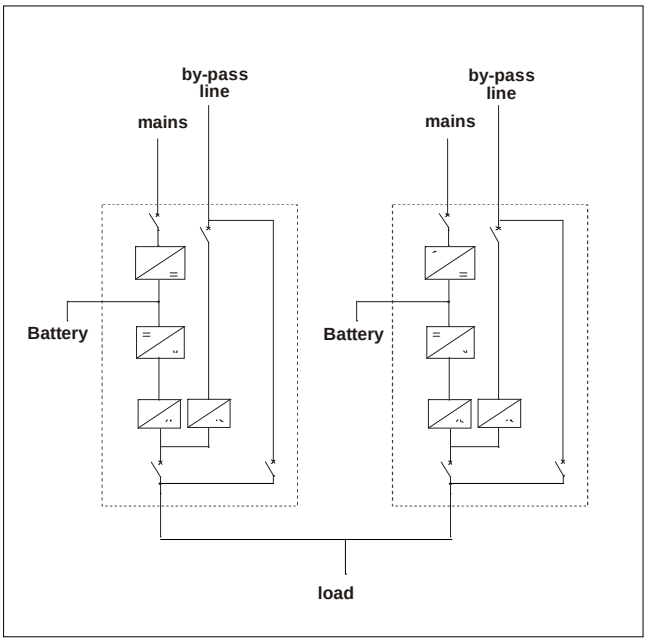

The load that can be applied to a system with several units connected in parallel may be greater than the load that can be supported by each individual unit, thanks to automatic power sharing. The reliability is only increased provided that the total power of the system with one unit deactivated remains greater than the required power. This condition can be achieved by always adding a redundant unit.

Having a redundant unit means having one more UPS than the minimum number of elements required to power the load, so that if a faulty unit is automatically excluded, power is still supplied correctly. The UPSs connected in parallel are coordinated by a card which ensures the interchange of information. The information is exchanged between the UPSs via a cable connecting them in a loop. The loop connection provides redundancy in the connection cable (communication in the cables between the individual units). This is the most reliable means of connecting the UPS and also allows the hot insertion or disconnection of a UPS. Each UPS has its own controller that continuously communicates with the whole system so as to guarantee the operation of the system. The cable transmits the signals from a “Master” UPS to the other “Slaves” using an opto-isolated system in order to keep the control systems electrically isolated from each other. The operating logic envisages that the first unit that is activated becomes the “Master” and takes control of the other “Slaves”. In the event of a fault in the “Master” unit, control is immediately switched to a “Slave” which then becomes the “Master”. The current system provides basic operation, each unit having its own battery. The system may be personalized (by means of a code inserted on the display panel) with all the units connected to a single battery.

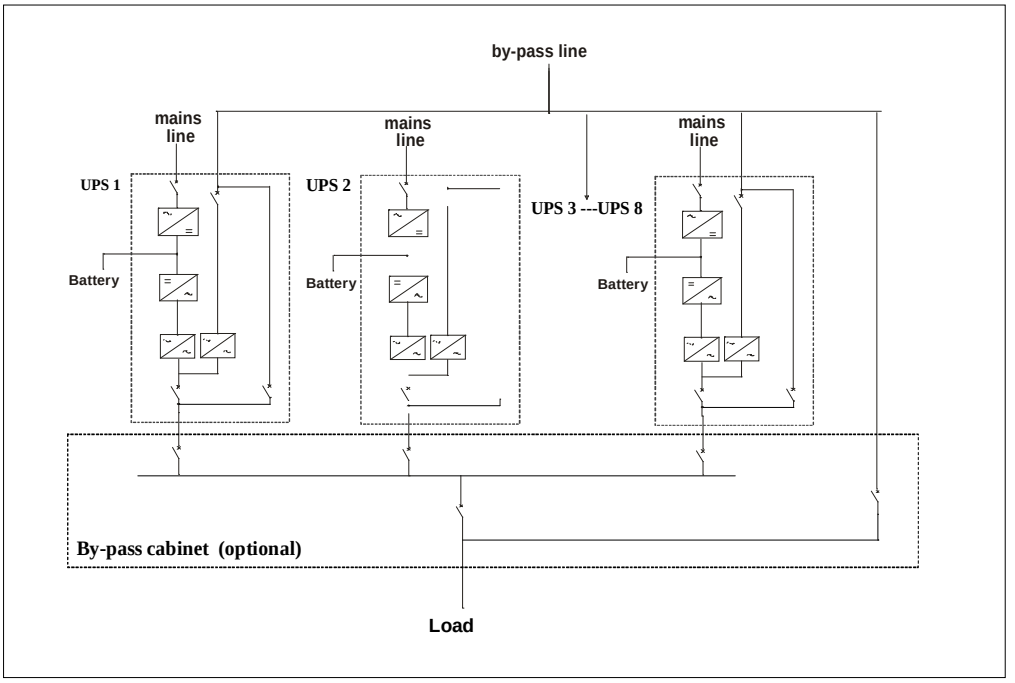

4.2 Electrical system set-up

All the information contained in the section on electrical system set-up in relation to the MASTER HP (page 12) remains valid with the addition of the information set out below.

4.2.1 Input

The instructions seen in the first part of the manual for a single UPS remain valid; each unit must be protected with equivalent fuses or switches.

4.2.2 Differential

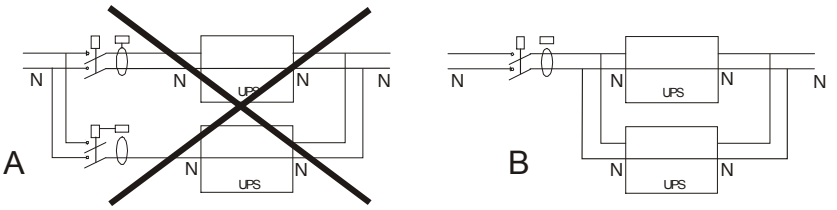

In order to avoid unnecessary interventions, versions with several parallel-connected devices must have a single differential switch inserted at the input of the whole system, as shown in figure B.

4.2.3 Emergency power off device (EPO)

When several devices are connected in parallel, the EPO command must be sent to all UPSs simultaneously, as shown in the figure below:

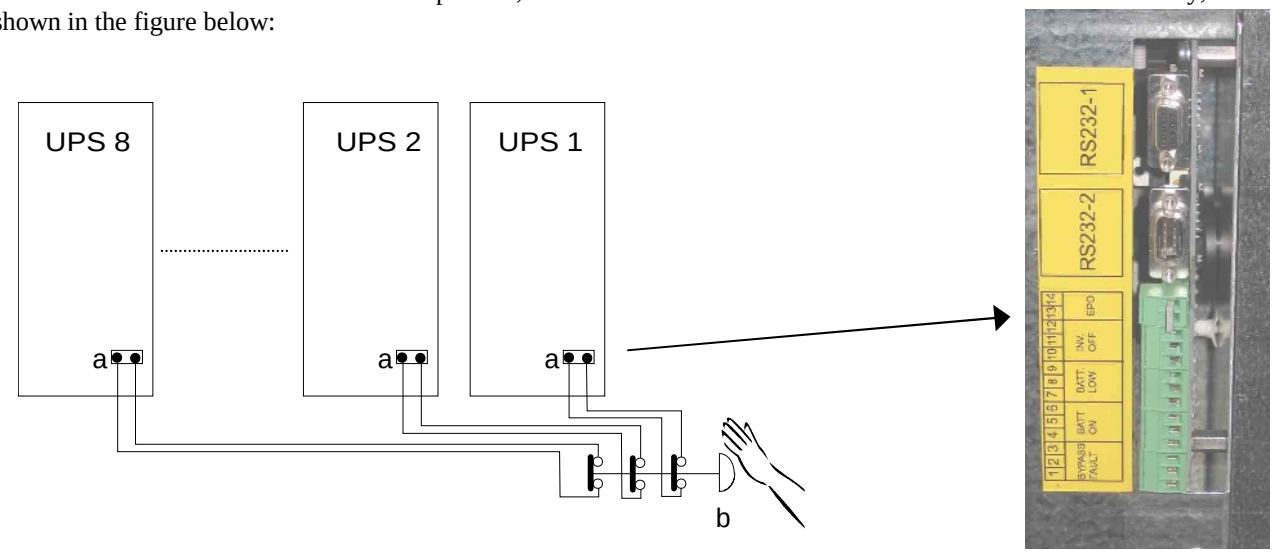

a - EPO terminal board on the UPS
b- EPO switch with auxiliary contacts (not provided).

The button must have the same number of auxiliary contacts as the number of parallel UPSs. Each UPS must have the jumper on the EPO terminals (page 19) removed and the wires from the auxiliary contact of the button must be connected instead of the jumper.
The contact must be closed with the button in the rest position and be opened when the button is pressed.
The connection must be made with the UPSs switched off.

4.2.4 External maintenance by-pass.

In some cases, in order to facilitate maintenance operations of the individual units making up the system, it may be advisable to install an external maintenance by-pass.
This device, which is housed in a cabinet the same height as the UPS, consists of two disconnectors, one for the output and one for the by-pass; these are sized for the total power of the system.

The new disconnector located on the by-pass line (S) must be provided with auxiliary contacts (one for each UPS). The position of the contact is opposite to the position of the switch, thus the contact must be closed when the disconnector is open.

The contacts of each disconnector must be connected to the corresponding UPS terminals, as shown in the diagram.

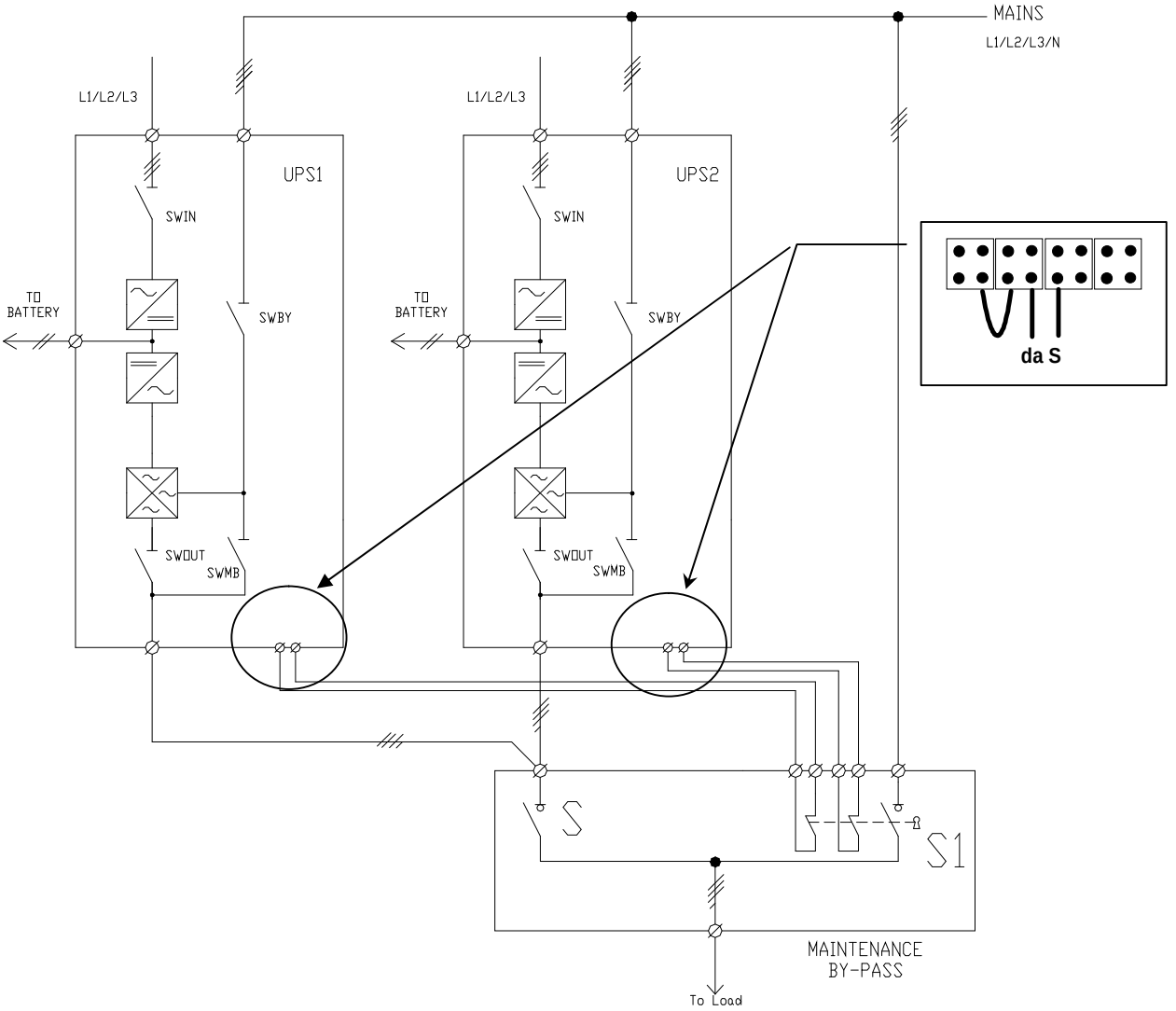

4.3 Mains, load and battery connections.

All the information contained in the section “Mains, load and battery connections” (page 16) in relation to the UPS remains valid with the addition of the information set out below.

4.3.1 UPS AC input / output power connection

Refer to the INSTALLATION DRAWINGS manual for information on how to select the cable sections for **each UPS**.

Observe the phase connections

Phase L1 of the system must be connected to input phase L1 on all the UPSs; all the output phases L1 must be connected together and with phase L1 of the load. The connections must be observed for phases L2, L3 and for the input and output neutral.

parallel connect the MASTER HPs as follows:
- Connect the power supply phases L1,L2,L3,N to the ***corresponding*** input phases of each UPS L1,L2,L3,N.
- Connect the load phases L1,L2,L3,N to the ***corresponding*** output phases of each UPS L1,L2,L3,N.

The figure shows an example of three units connected in parallel.

Power supply line (M)
MASTER HP input terminal boards (B)
MASTER HP output terminal boards (C)
Load (D)
Aux SWOUT ex (A)

a1,a2,a3,c1,c2,c3) length of cables

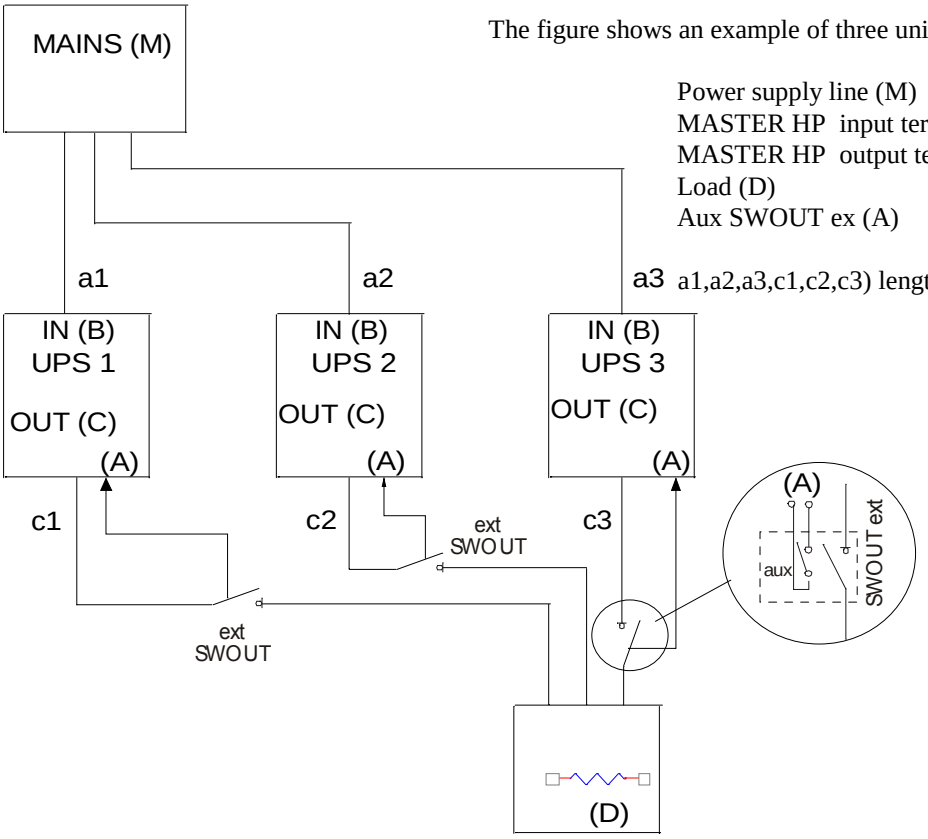

NOTE: “SWOUT ext” must be provided with an auxiliary contact (open with the switch open and closed with the switch closed).

Length of the cables

The sum of the lengths of the power supply and output cables must be the same for all units. With reference to the drawing, these must be: a1+c1 = a2+c2 = a3+c3

a = length of input line cables
b = length of output line cables

The same rule must also be observed with separate power lines: the lengths of the cables of the by-pass line + output line must be the same between all the MASTER HP connected in parallel.

Lack of compliance with this rule may cause a current imbalance between the UPSs when the load is powered through the by-pass line.
An overload on the by-pass line of one UPS will lead to a deterioration of the components on that line, both internal and external to the UPS: that is, the disconnector cables and electronic power components.

4.3.2 Power connections battery side.

BATTERY CABINET if provided:

In order for the battery cabinet to be connected to the MASTER HP, it ***must be*** provided with a sectioning device.
This disconnector ***must*** be closed ***only when*** the UPS is started up regularly. In the phase of connection to the UPS the disconnector ***must*** remain in the open position.

Each UPS with its own battery cabinet

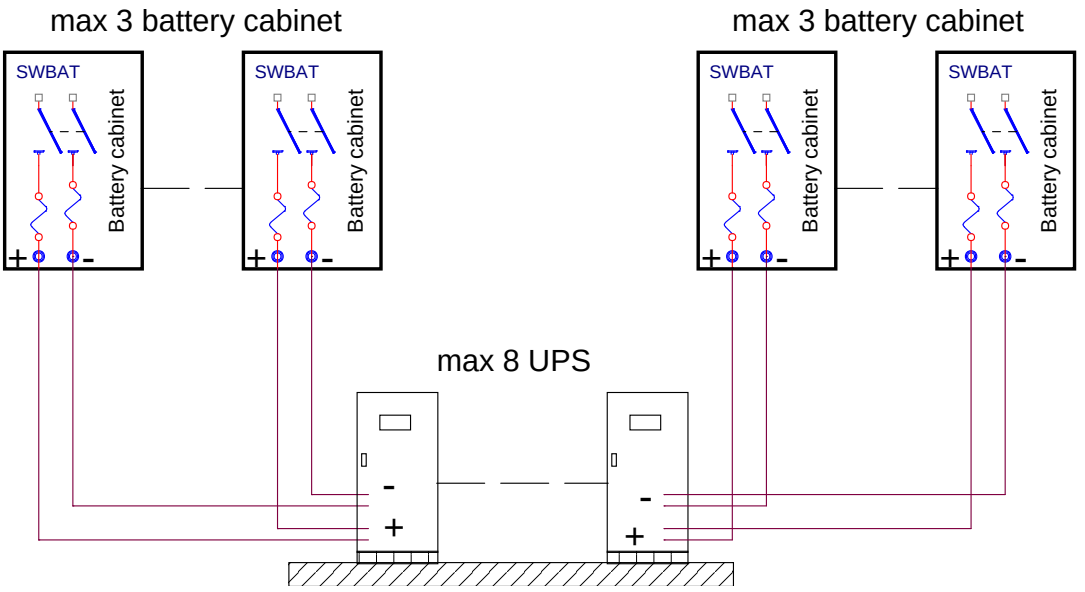

DISCONNECTOR CABINET

For systems with 4 or more battery cabinets, it is necessary to use a ***Battery switch cabinet*** where the cables can be connected in parallel (consult the commercial department). For the sizing of the cables and for the connection procedure refer to the "INSTALLATION DRAWING" attached to the battery cabinet.

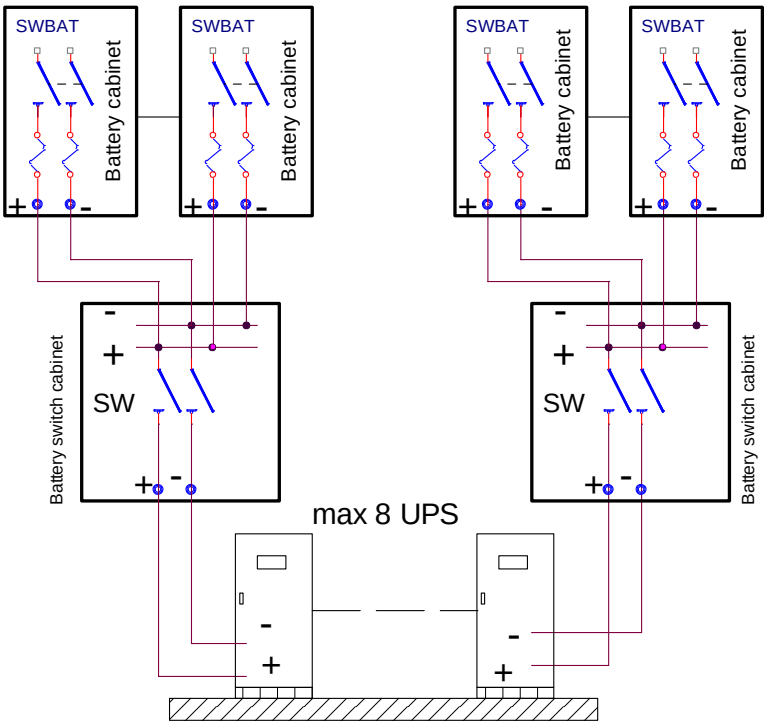

TO CONNECT MORE UPS IN PARALLEL WITH ONLY ONE BATTERY:

Between battery cabinets and the UPS must be positioned a ***Battery switches cabinet*** , to allow the single UPS maintenance, as shows the picture.

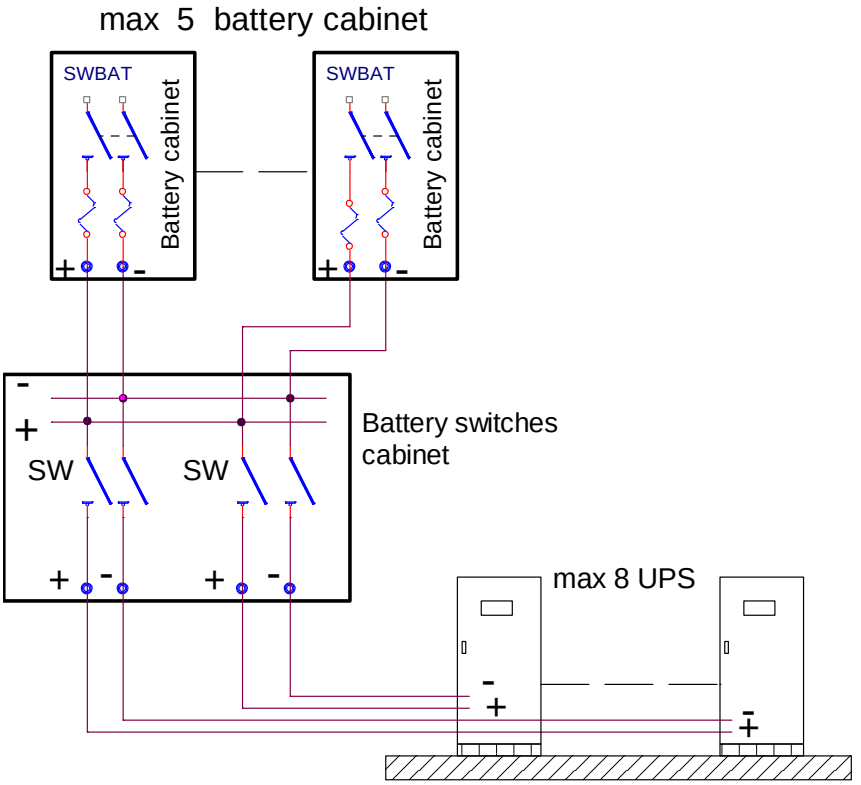

Consult the commercial department for backup times that require a greater number of battery cabinets.

4.4 Connection of signals

The signals of several parallel UPSs are connected in a closed loop configuration; if the loop is interrupted at any point, either due to a fault or for maintenance, operation of the system is not compromised, and the system continues to operate normally, as will be shown repeatedly below.

The various UPSs are connected through the “signals RJ45-flat-adapter” parallel card, located in the lower part of the UPS (in the area for signal and command connections as shown in the section on SIGNALS and REMOTE COMMANDS).

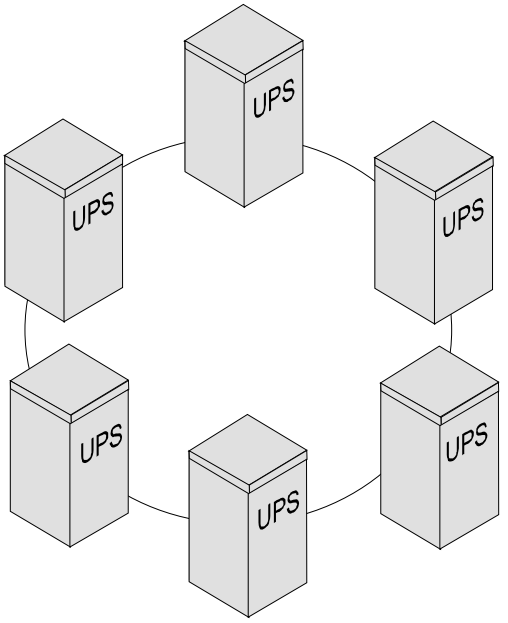

- RJ45-flat-adapter signals parallel card.

N.B.: the MASTER HP may be provided with two versions of parallel card that differ in the type of switch used (type 1 or type 2). The difference between the two switches is the position of the control lever.

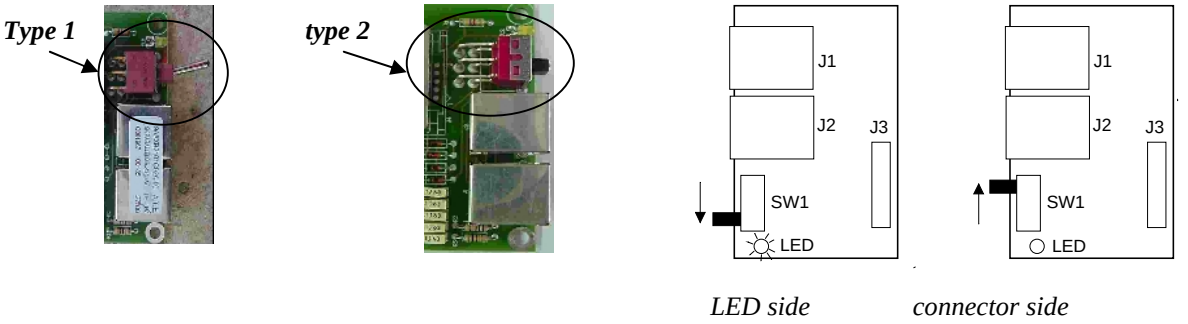

J1 RJ45 type connector
J2 RJ45 type connector

SW1	***start position***	*connector side(type 1)*	*LED side (type 2)*
	Cont position	*LED side (type 1)*	*connector side (type 2)*
LED	*on*	*SW1 start position*	
	off	*SW1 Cont position*	

Firmware update
All the parallel-connected UPSs must have the same firmware version. Press key 7 from the basic menu on the display panel to display the firmware version installed. For the expansion of an existing system, check that the system has the same firmware version as the new MASTER HP.

Using the cable with two RJ45 terminals provided with each UPS (***A***), make the connections as shown below:

single MASTER HP configured in parallel

If it is required to use a UPS that has been configured as a parallel unit on its own, the signal card must be jumpered with the cable provided as shown below.

A UPS PARALLEL CABLE
B RJ45 type connector
C RJ45-flat-adapter signal parallel card
D LED on
E SW1 start position.

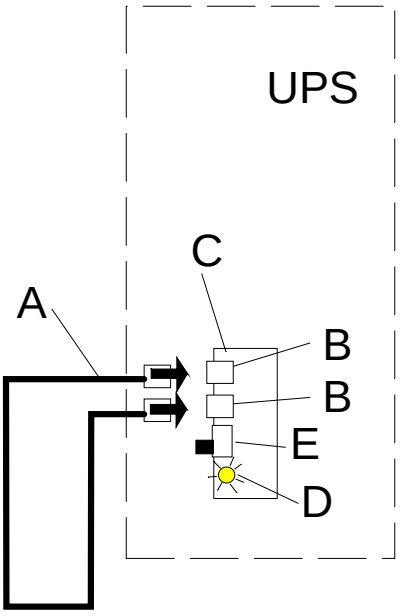

two MASTER HPs in parallel

D UPS1 LED on, UPS2 LED off
E SW1 start position. UPS1, SW1 cont position UPS2.

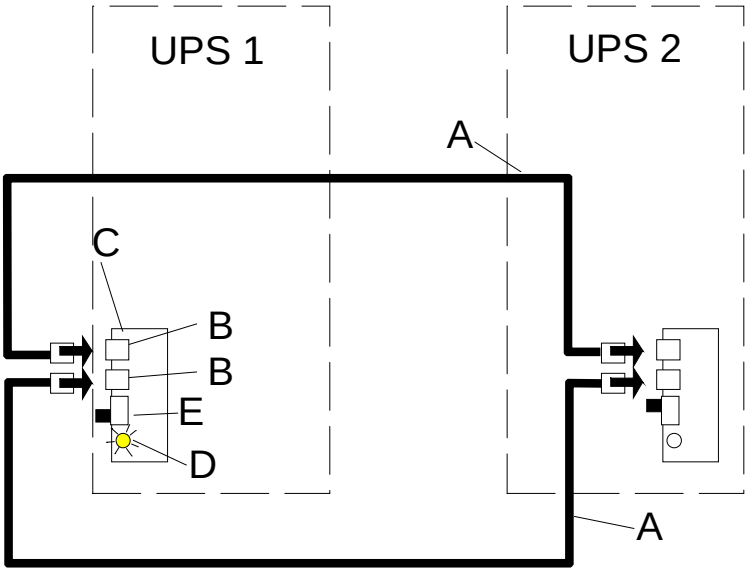

-

<u>three MASTER HP in paralell</u>

D UPS1 LED on, UPS2 LED off, UPS3 LED off
E SW1 start position UPS1, SW1 cont position UPS2, UPS3

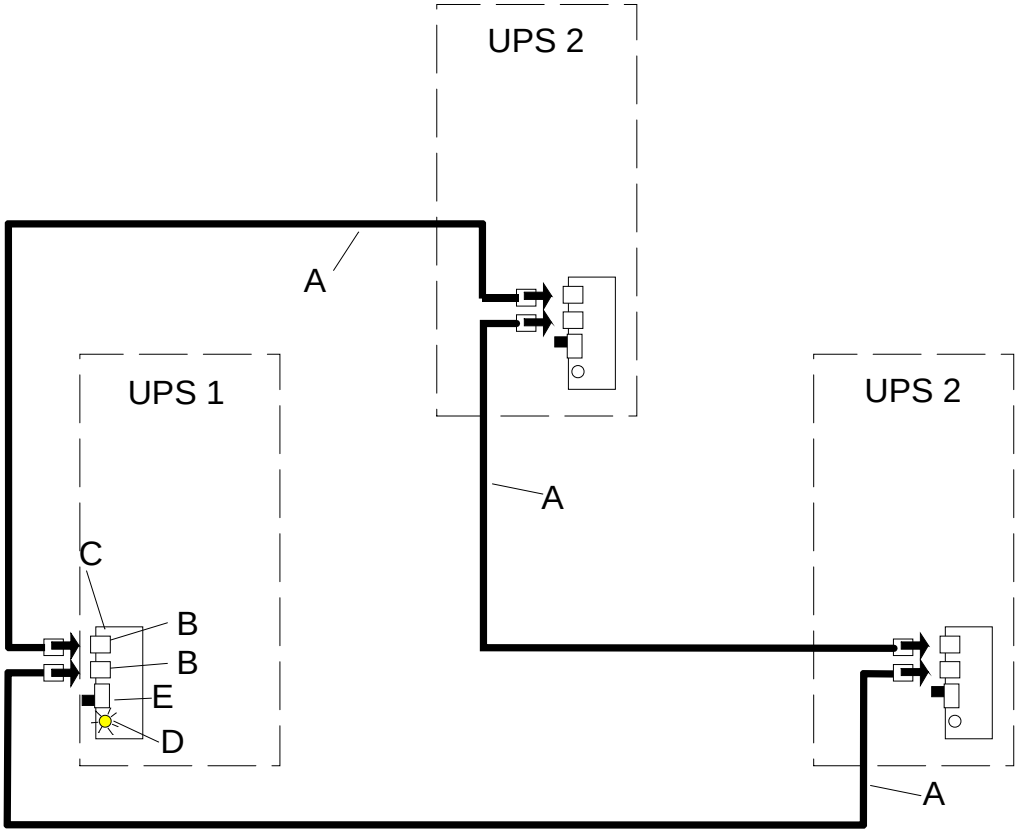

To add other parallel UPSs, a "*UPS PARALLEL CABLE" must be added for each new UPS connected*.

	The signal connection must not be removed when one UPS is shut down

4.5 Start-up procedure

Before starting up the whole system for the first time, some tests have to be performed to check that the UPSs are connected to each other correctly.

A) open all the switches and disconnectors on the UPSs (SWIN, SWBY, SWOUT and SWMB) and on the battery cabinets.

B) Close SWMB on one unit and check that on all the units:

- The voltage present between the corresponding input and output terminals of each UPS is <2Vac. If not, check that the UPSs are connected to each other correctly.
- Once the operation has terminated, open SWMB.

C) Start up UPS1 by closing SWIN, SWBY and SWOUT. Wait until the message "NORMAL OPERATION" appears on the display.
After a few moments, messages on the UPS status will start to scroll across the first line of the display panel. These will include the following message regarding the battery disconnector:

Wait: DO NOT connect the BATTERY

D) Close SWIN, SWBY on all the other UPSs.

E) Check that all the parallel-connected MASTER HPs are on.

close the disconnector or the fuses on the battery cabinets ***only when the following message is no longer shown*** on the first line of the display panel:
Wait: DO NOT connect the BATTERY

FOR OPERATION WITH A SINGLE BATTERY ONLY

Check the letter "X" on the second line of the display panel:
Example: "UPS type", "X" OUT=YYY%VA, BATT=YYY%Ah, 5=ON(or OFF)
N.B.: the UPS with a capital "X" (B or P) is the MASTER unit
The "X" on the MASTER unit may be:

- X= B, the parallel battery code has already been inserted.

Only the battery capacity value has to be inserted (see below).

- X= P the parallel battery code must be inserted by pressing keys 3, 5 in sequence on the control panel and the code 467123 (repeat the same sequence to disable the parallel).

The UPSs connected to the one in which the code is inserted will be automatically configured through the parallel cable (the letter "b" will be displayed on all the UPSs).
This configures the value of the battery capacity only; this value must be inserted on the MASTER UPS, which will send the information to the other units via the signal cable.

G) Close SWMB of UPS 1 and check that the whole system switches onto the by-pass line (the bypass LED on unit1 will flash while it must be on steady on the other UPSs), then open switch SWMB again. Wait a few seconds then check that the UPS1 returns to "NORMAL OPERATION".
Repeat this operation for the other units connected.
If this check is positive, close SWOUT on all the units.
Replace the switch block on all the SWMBs so that they are blocked in the open position.

H) At the end of the start-up phase, all the UPSs must be in the "NORMAL OPERATION" condition.

I) Wait approx. one minute from the insertion of the last UPS, then check that with the load not connected the output power indicated by each unit is <3%.

L) Connect the load in output, wait approx. one minute and then check that the power shared between the various units is within ±2%.

4.6 Operating modes

Several MASTER HP units connected in parallel share the current absorbed by the load between them.
In a system with several UPSs connected in parallel, there is a single MASTER unit and the remaining units will be SLAVES. The UPSs are all exactly the same and the MASTER is chosen on start-up. The MASTER unit is shown on the display panel by the capital letter “P” (or “B” in the case of a single battery). The MASTER and SLAVE units may exchange roles. If a unit goes out of service, e.g. due to an inverter fault, it will automatically be excluded. The load at this point is shared between the units that are still active; if the power in output is excessive for the remaining UPSs, the system logic switches all the units, including the UPS that was excluded, onto the by-pass line.

All the information contained in the section on “operating modes” (page 27) in relation to the UPS remains valid with the addition of the information set out below.

ON LINE OPERATION
The message: “NORMAL OPERATION” is shown on the display panel of each UPS and the letter “P” appears in the bottom left-hand corner near the indication of the model. This letter is in upper case if the equipment in question is the MASTER, while a lower case character is displayed if the UPS is a SLAVE.

STAND-BY ON OPERATION
The sharing of the load between the UPSs is linked to the length of the cables, and the rules on the length of the connections indicated in the section “connections” must be observed. In the event of a mains power failure, the load is passed onto all the parallel-connected UPSs.

STAND-BY OFF OPERATION
In this mode, if there is a mains power outage, the devices share the load equally; the load is not powered with the mains present.

STABILIZER WITHOUT BATTERY OPERATION
In this mode, the devices share the load equally.

BATTERY OPERATION

One battery for each UPS
Each unit draws the energy from its own battery. At the end of its backup time each UPS excludes itself. The load remains unpowered if the duration of the mains outage is greater than the backup time of the whole system. When the mains is restored the system will restart automatically. Each MASTER HP recharges its own battery.

One battery for all the UPSs.
Each unit draws the energy from the common battery. At the end of the backup time, the whole system excludes itself. The load remains unpowered if the duration of the mains outage is greater than the backup time of the whole system. When the mains is restored the system will restart automatically. Each UPS recharges the common battery.

OVERLOAD
In this mode too, the devices share the overload equally.
If the load applied to the system is not reduced, the whole system will switch onto the by-pass line. When the overload is removed, all the units will automatically return to normal operation. If the overload persists, however, it triggers the external protection devices located at the UPS input on the by-pass line. In this case the load would remain unpowered.

Example of parallel operation

For the sake of simplicity, the instructions shown below refer to a system with three UPSs, but are equally valid for more complex systems.

Let us assume that the signal cable is not damaged and that the UPSs are in the following state:

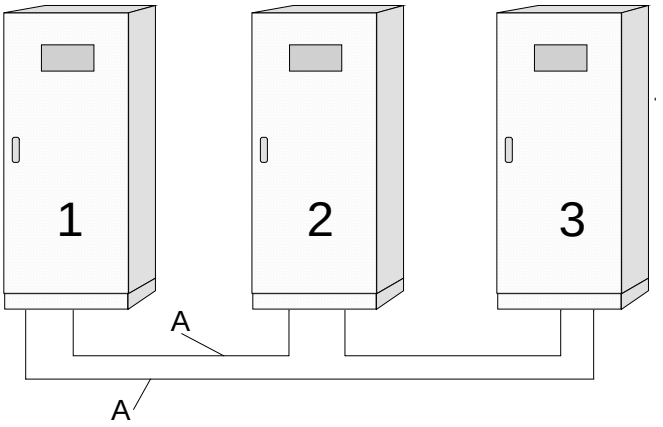

UPS STATUS
1) Normal operation, Master unit
2) Normal operation, Slave unit
3) Normal operation, Slave unit

A UPS PARALLEL CABLE type RJ45
1,2,3 Parallel-connected UPSs

If the signal cable between UPSs 1 and 3 is open (UPS PARALLEL CABLE type RJ45).

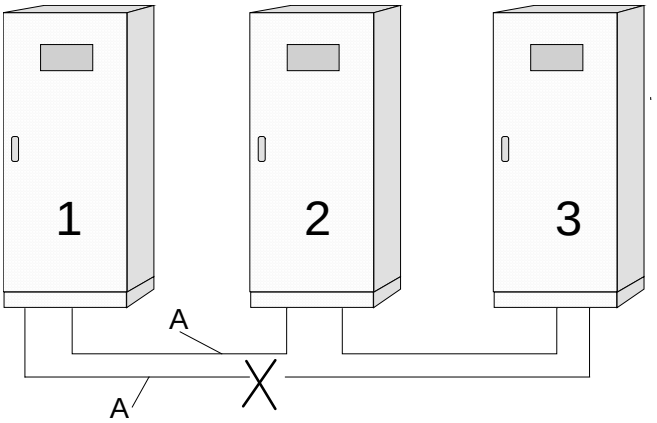

UPS STATUS
1) Normal operation, Master unit with message "Parallel signal cable fault" appears on the panel
2) Normal operation, Slave units with message "Parallel signal cable fault" on the panel
3) Normal operation, Slave units with message "Parallel signal cable fault" on the panel

N.B.: in this situation the load is powered correctly. All the MASTER HP supply power to the load.

Let us assume that the signal cables between UPSs 1, 3 and 2,3 are opened.

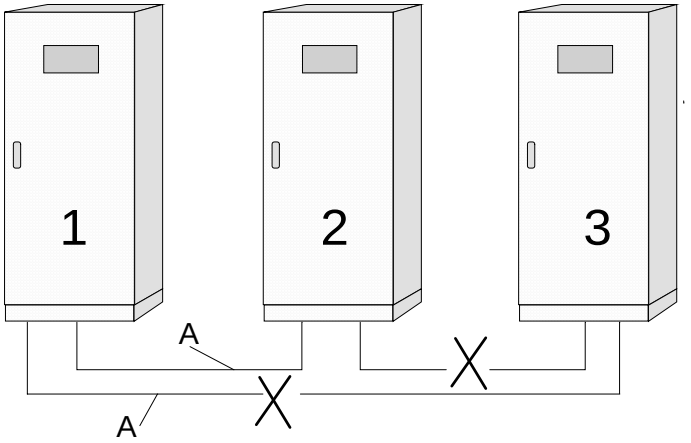

UPS STATUS
1) Normal operation, Master unit with message "Parallel signal cable fault" on the panel
2) Normal operation, Slave units with message "Parallel signal cable fault" on the panel
3) Disconnected (TLI open, SCRs off), Slave units with message "INTERNAL FAULT 10" on the panel
N.B.: In this situation the load is only powered correctly by UPSs 1 and 2.

To restore the broken signal cable, first the UPS with the message "INTERNAL FAULT 10" on the panel has to be shut down.

4.7 By-pass for maintenance

observe the following precautions when operating SWMB
SWMB must not be closed on a UPS that is off and that is connected in parallel with other units operating normally. This operation may cause a fault on the UPSs which may create a dangerous voltage at the output. SWMB may be closed with the MASTER HP operating by following the procedure described in the section "Operating modes" .

operation not to be executed
If disconnector SWMB is closed on any unit, the whole system switches onto by-pass. If all the switches are then opened to allow maintenance operations to be carried out, all the power required by the load will switch onto the maintenance by-pass line of the unit in which SWMB has been closed. ***WARNING: both the automatic and the maintenance by-pass line of each UPS is sized for the rated power of the single unit.*** ***N.B. To carry out maintenance on all the UPS, the switches SWMB of all the units must be closed.***

maintenance on a single unit

This is the procedure to carry out maintenance operations **on a single unit** (e.g. UPS1):
open switches SWBY, SWOUT, SWIN and the battery cabinet disconnector on unit 1 only.
If the active UPSs can power the load, the system remains in normal operation, and the maintenance can be carried out on UPS1.

maintenance on the whole system

The sequences of operations to be carried out to place the system in maintenance bypass are described below. The procedures vary depending on the initial state:

- All the UPS are in NORMAL OPERATION
  procedure a) *the power supply to the load is not interrupted in any way*;
- whole system with output not synchronised with the by-pass line
  procedure b) *the power supply to the load is interrupted*
  (therefore this operation should be effected only if absolutely necessary).

Procedure a)

the by-pass line is present and its frequency and voltage are suitable *the UPS display panel indicates* NORMAL OPERATION.

1. close all the disconnectors SWMB (the control logic automatically disables the inverter)
2. open all the switches on the device (SWIN, SWOUT, SWBY and the battery cabinet disconnectors/fuses) and keep only disconnectors SWMB (maintenance by-pass line) closed. The control panel remains off.

N.B.: After carrying out the operations indicated above, personnel must wait around ten minutes for the capacitors to discharge before working on the inside of the MASTER HP.

In this situation (during the maintenance operations), any disturbance (such as a blackout) on the UPS supply line would have an effect on the equipment powered (since the batteries are deactivated in this state).

Procedure b)

The by-pass line is outside the acceptance field; the following message is seen on the display panel:

BAD BYPASS VOLTAGE or SWBY OFF

1. open all the switches on the device (SWIN, SWOUT, SWBY and the battery cabinet disconnectors/fuses). The control panel will remain off.
2. before closing switches SWMB and connecting the loads, ensure that both the frequency and voltage of the supply line are sufficient to power the connected loads.

N.B.: After carrying out the operations indicated above, personnel must wait around ten minutes for the capacitors to discharge before working on the inside of the MASTER HP.

After the maintenance operations have finished, restart the UPS by following the instructions in the section on START-UP PROCEDURE (see page 44) and then open disconnector SWMB (if closed).
The MASTER HP will return to NORMAL OPERATION.

Insertion and removal with UPSs operating (hot swap)

The hot insertion and removal of the UPS can only take place if the system is configured with the **RJ45 female/RJ45 female shielded adaptor cable** (as shown in the figures below).

The hot insertion and removal of the UPS makes technical support easier and improves the reliability of the system.
With this procedure it is not necessary to shut down all the UPSs in order to add or remove a unit.
Hot insertion and removal can only be done on systems comprising UPSs with the following characteristics:
The UPS system must be prearranged with a distribution panel (for power connections)
The UPS system must be prearranged with a RJ45 female/RJ45 female shielded adaptor cable (not provided with the UPS). All the UPSs in the system must have the same firmware version.

Example of hot insertion

I

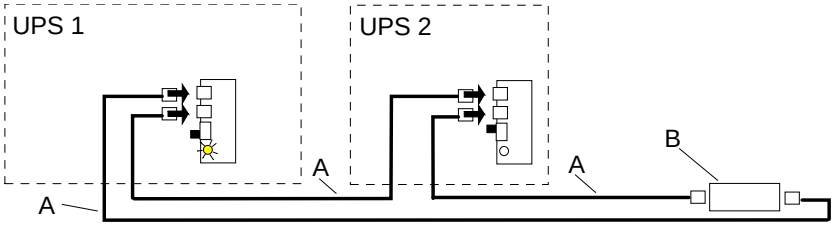

A)UPS parallel cable type RJ45
B) RJ45 female/RJ45 female shielded adaptor cable *UPS BY-PASS CABLE*

II

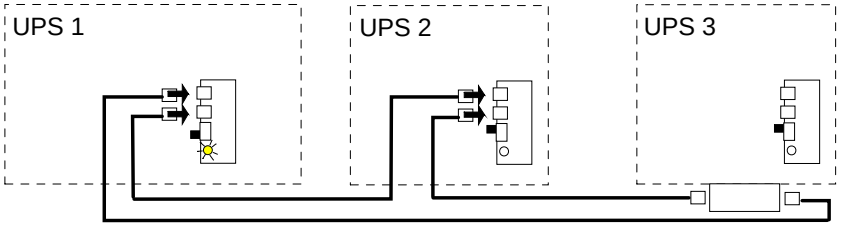

phase II Insert the new UPS (power connections in the distribution panel) and keep it switched off.
UPS 3: SW1 cont position.

III

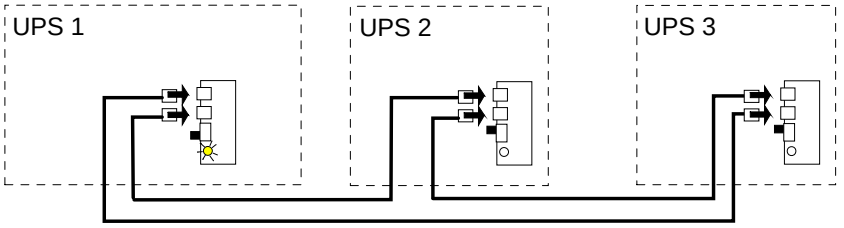

Phase III Remove adaptor B and insert the new UPS instead of the adaptor.

Now switch on UPS 3 (the added UPS).

With the lever of SW1 in the start position in one UPS only and the lever in the cont position on all the others, check that all the UPSs are operating normally and that the system is sharing the output power.

Example of hot removal

With hot removal, it is not necessary to shut down all the UPSs of the system in order to remove one.

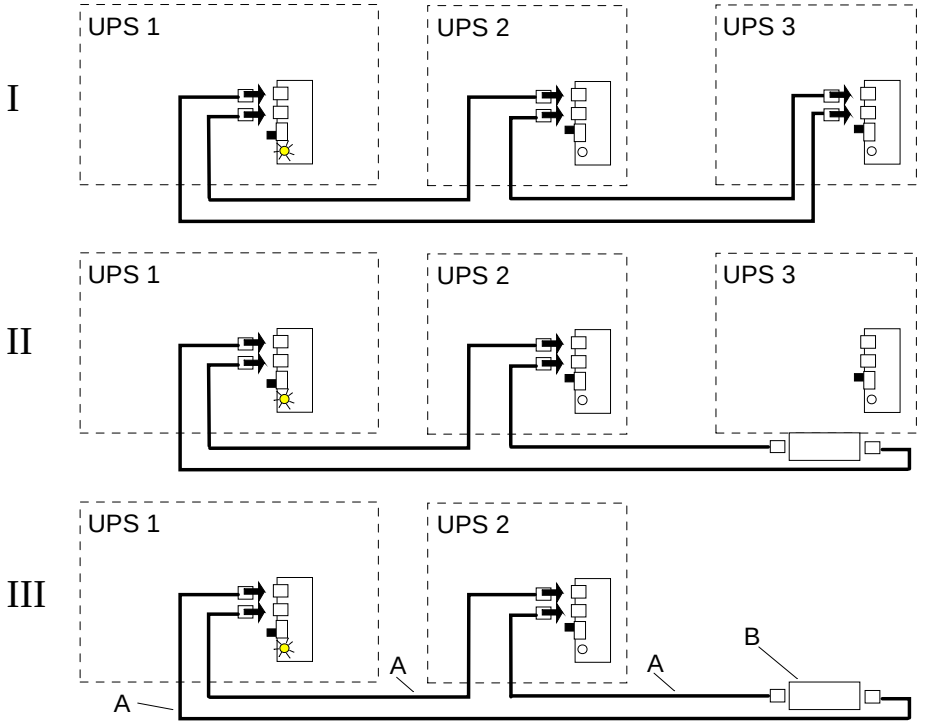

A)UPS parallel cable type RJ45
B) RJ45 female/RJ45 female shielded adaptor cable *UPS BYPASS CABLE*

N.B.: if the UPS to be removed has SW1 in the start position, one of the other UPSs (UPS 1 or UPS2) must be in the start position.

One UPS in the system must have SW1 in the start position and LED

Phase I Shut down the UPS (3) that is to be removed. Remove the signal cables of the UPS to be removed.

Phase II-III Connect the RJ45 female/RJ45 female shielded adaptor cable (not provided) between cables A.
Check that all the UPS are operating normally and that the system is sharing the output power.

This page is left blank intentionally.

5. Maintenance

The uninterruptible power supply is designed and produced to last a long time even in the most severe service conditions. It should be remembered however that this is electrical power equipment, which requires periodic controls. Moreover, some components have a limited lifespan and as such must be periodically checked and replaced should conditions so dictate: in particular the batteries, the fans and in some cases the electrolytic condensers. It is therefore recommended to implement a preventive maintenance programme, which should be entrusted to specialized personnel authorized by the manufacturers.
Our Technical Support Service will be happy to recommend the various personalized options for preventive maintenance.

Periodic operations (to be carried out by trained personnel and with doors closed)
The following operations (which must be done with the doors closed) should be carried out periodically (e.g. once a month, or more frequently in particularly difficult environmental conditions):

- Ensure that the air intake slots (located on the front door and at the back of the cabinet) and the output grilles located on the top of the cabinet are clean;
- Ensure that the UPS is working properly (the message "NORMAL OPERATION" will appear on the display panel). If an alarm message is displayed, check the meaning in the manual before contacting the technical support service;
- Perform a battery test with the display panel.

Maintenance inside the UPS (trained personnel only)

Maintenance inside the UPS may only be carried out by trained personnel. The UPS is designed to power the load when it is disconnected from the power supply line.
High voltage is present inside the UPS even when the power supply and the battery have been disconnected

After disconnecting the power supply line and the battery cabinet, the trained personnel must wait around ten minutes for the capacitors to discharge before working on the inside of the equipment.

Ordinary maintenance for batteries (trained personnel only)
The system automatically controls the efficiency of the batteries every 24 hours, and sounds an alarm when the efficiency is lower than that calculated according to the stored capacity value.
The lifespan of the batteries is linked to the operating temperature and to the number of charge and discharge cycles effected.
The capacity is not constant, but increases after some charge and discharge cycles; it then remains constant for several hundreds of cycles before decreasing permanently.
Preventive maintenance of the battery entails:

- keeping the operating temperature within the field 20 - 25°C;
- performing two or three discharge and charge cycles during the first month of use;
- carrying out this operation every six months after the first month of use.

Since the batteries are a source of energy, opening the battery disconnector does not eliminate the voltage inside the batteries. DO NOT TRY TO ACCESS THE INSIDE OF THE BATTERY CABINET. THERE ARE ALWAYS DANGEROUS VOLTAGES AROUND THE BATTERIES. If the batteries are thought to be faulty in any way, please contact the technical support service.

If the batteries need to be replaced, this must be done by a ***specialized technician***. The replaced parts must be sent to a specialized company for disposal by means of recycling. Batteries are classified by law as "toxic waste".

This page is left blank intentionally.

6. General characteristics

Mechanical Data	MASTER HP Power (kVA)				
	100	120	160	200	250
Width (mm)	800			1000	
Depth / height (mm)	850 / 1900				
Ventilation	Forced				
Max current dispersion	300mA max				
Noise at 1m from front (0÷100% load)(dBA)	65	65	68	68	68
Applicable Standards	Refer to the "Safety and Compliance Manual " supplied with the UPS (0MNA141_NE).				

Electrical Data	MASTER HP Power (kVA)				
	100	120	160	200	250
INPUT					
Rated voltage	400Vac 3-phase				
Rated voltage tolerance with battery recharge	+20%, -10% (100% load) +20%, -20% (85% load) +20%, -30% (75% load) +20%, -40% (65% load)				
Rated frequency [Hz]	50/60				
Input frequency tolerance	from 45 to 65Hz				
Rated current absorbed (400 V) [A]	141	169	226	281	352
Rated power absorbed (400 V) [kVA]	98	117	156	195	244
Maximum current absorbed at full load and with battery recharging [A]	159	190	254	317	397
Power factor at rated voltage (400 V) and battery charge from 25% to 100% of the load	>0.99				
Current Harmonic Distortion (THDi) (with mains THDV ≤1%) % load > 25% > 50% > 75%	 ≤ 8 ≤ 5 ≤ 3				
Progressive start of rectifier (Power Walk-in)	configurable (0÷120s)				
Delay of progressive start of rectifier (Power Walk-in delay timer)	configurable (0÷120s)				

Electrical Data	MASTER HP Power (kVA)				
	100	120	160	200	250
INTERMEDIATE D.C. CIRCUIT					
Monoblocks/ Number of Pb elements	40 / 240				
Ripple voltage with recharged battery (%)	Approx. 0				
Max recharge current [A]					
Full load	22	25	35	45	55
Load 90%	40	48	60	80	100
Load 80%	50	65	90	110	140
Load ≤ 70%	70	85	110	130	165

Electrical Data	*MASTER HP Power (kVA)*				
	100	120	160	200	250
INVERTER					
Rated power Pf 0.9 inductive (kVA)	100	120	160	200	250
Active power Pf 1 (kW)	90	108	144	180	225
Rated voltage	400Vca 3-phase + N (configurable from 380V to 415V)				
Rated frequency	50 or 60Hz (configurable)				
Rated voltage adjustment field	from 360 to 420V				
Static variation	± 1%				
Dynamic variation	± 5%				
Recovery time within ± 1%	20ms Conforms to standard EN 62040-3, class 1				
Current peak factor (Ipeak/Irms as per EN 62040-3)	3:1				
Voltage distortion with linear load	1% (typical), 2% (max)				
Voltage distortion with non linear load (EN 62040-3)	< 3%				
Stability of frequency with Inverter synchronized with the by-pass mains	± 2% (adjustable from ± 1% to ± 6% from control panel)				
Stability of frequency with Inverter not synchronized with the by-pass mains	± 0.05%				
Speed of frequency variation	1Hz/sec				
Dissymmetry of the phase voltages with balanced and unbalanced load	≤ 1%				
Voltage phase shift with balanced and unbalanced load	120 ± 1 °el				
Overload with reference to the rated power: Three phase	110% for 60’ , 125% for 10’ , 150% for 1’				
Mono phase	200% for 6 s				
Short circuit current Phase / Phase	180% for 1 second with current limiting				
Phase / Neutral	300% for 1 second with current limiting				
Inverter from battery efficiency (%)	94%				

Electrical Data	*MASTER HP Power (KVA)*				
	100	120	160	200	250
BY-PASS					
Rated voltage	400Vca 3-phase + N (configurable from 380V to 415V)				
Rated voltage tolerance	± 20% (adjustable from ± 5% to ± 25% from control panel)				
Rated frequency	50 or 60Hz (auto-sensing)				
Frequency tolerance	± 2% (adjustable up to ± 6% from control panel)				
Switching onto by-pass with synchronized Inverter (UPS in “Normal Mode”)	< 1				
Switching onto by-pass with Inverter out of sync (UPS in “Normal Mode”)	100 ms				
Switching from by-pass to Inverter (UPS in “Stand-by On mode”)	from 2 to 5ms				
Delay in transfer onto Inverter after switching onto by-pass	4 s				
Power overload capacity of the by-pass line	110 % for 60 minutes, 125 % for 10 minutes, 150 % for 1 minute				
i^2t SCR bypass (25°C, 8÷10ms) [A^2s]	20K	145K	145K	405K	405K
Short circuit capacity of the by-pass line (x rated current)					
1 second	4,5	10	7,5	9,5	7,5
500 ms	5	11	8	10,5	8,5
200 ms	6	13	9,5	12,5	10
100 ms	6,5	14	10,5	13,5	10,5
10 ms	9,5	20	15	19,5	15,5

7. Appendix A - remote commands and alarms card -

Technical support personnel may give the COMMAND and the three ALARMS functions that are different to the standard configuration of the alarms card (see page 20) .

The options available are listed below:

ALARMS:

- DISTURBANCES ON BYPASS LINE
- MANUAL BYPASS, SWMB ON
- BYPASS LINE VOLT. FAIL OR SWBY, FSCR OFF
- MAIN LINE VOLTAGE FAIL OR SWIN OFF
- PREALARM, LOW BATTERY VOLTAGE
- LOW BATTERY CHARGE OR CLOSE SWB
- LOW INPUT VOLTAGE OR OUTPUT OVERLOAD [W]
- OUTPUT OVERLOAD
- BYPASS FOR OUTPUT POWER “VA” < AUTO-OFF VALUE
- INTERNAL FAULT: number
- TEMPORARY BY-PASS, WAIT
- BYPASS FOR OUTPUT OVERLOAD
- BYPASS COMMAND ACTIVE; 8=COM. OFF
- REMOTE BYPASS COMMAND ACTIVE 8=OFF
- OVERTEMPERATURE or FAN FAILURE
- INPUT VOLTAGE SEQUENCE NOT OK
- OUTPUT OFF, CLOSE SWOUT OR SWMB
- BLOCK COMMAND ACTIVE; 8=OFF
- REMOTE BLOCKING COMMAND: ACTIVE 8=OFF
- MEMORY CHANGED: CODE = number
- AUTO-OFF Timer: Toff= 0: 0', Ton= 0: 0'

See the section on “Display and control panel” user manual for an explanation of the alarms.

COMMAND:

name	***description***	***Typical application***
Bat tery charge inhibition	Disables the recharging of the battery, keeping the recharge current to a minimum, independently of the load. *This is done with the contact kept closed; if reopened, the command is cancelled.*	When there is a generator, this allows its output power to be used only to supply the load and not also to recharge the battery.
Inhibition of synchronization with backup mains	Disables the use of the by-pass line and the synchronization of the inverter. In the event of an overload or fault, the UPS blocks and the load remains unpowered. *This is done with the contact kept closed; if reopened, the command is cancelled.*	To be used when the frequency of the generator or of the backup mains is highly unstable and it is thus preferred to inhibit the synchronization of the inverter.
Battery disconnector contact	Activates the battery discharging or disconnected alarm. To be used to indicate the opening of a battery switch located external to the UPS. *A closed contact must be provided when the external switch is opened.*	Displays the status of the battery disconnector.

Standby ON	Forces the selection of the UPS Standby-ON operation. *This is done with the contact kept closed; if reopened, the command is cancelled.*	To be used when the load may support mains interference or frequency variations and it is thus preferred to improve system efficiency. The load is powered if there is a mains power failure.
Battery test	Starts the automatic battery test when the UPS is in normal operation. Any automatic battery test underway is terminated immediately. *This is achieved by switching the contact from open to closed.*	Checks state of the battery.
Battery test (with rectifier on)	Starts the manual battery test that continues until a block command is received or until the full discharge of the battery. Terminates any manual battery test underway. *This is achieved by switching the contact from open to closed.*	Checks state of the battery. N.B.: During this test the rectifier remains on with output voltage low in order to allow the supply of current by the battery and to prevent inverter shutdown after battery discharge.
Manual battery charging	Starts the "single first time recharge". Terminates the first time charging underway. *This is achieved by switching the contact from open to closed.*	Activates manual remote battery charging
Activation of block on Bypass	Bypass command by means of blocking the inverter as a result of switching onto the by-pass line. N.B.: The command is only executed if the by-pass line is present with correct values. *This is achieved by switching the contact from open to closed.*	Load unpowered in the event of a mains outage. To be used for non-critical loads, the battery does not discharge during a mains power failure.
Inhibition of block on bypass	Resets the bypass command. *This is achieved by switching the contact from open to closed.*	Cancels the previous action and disables the inverter block.
Inverter ON/OFF	UNCONDITIONAL inverter block command (the command is executed even if there is no by-pass line). The UPS only switches onto by-pass if the by-pass line is present (otherwise the load remains unpowered). *This is done with the contact kept closed; if reopened, the command is cancelled.*	Load unpowered in the event of a mains outage. To be used for non-critical loads, the battery does not discharge during a mains power failure.
Rectifier off	UNCONDITIONAL rectifier block command. *This is done with the contact kept closed; if reopened, the command is cancelled.*	Shuts down the rectifier and discharges the battery.