MULTI SENTRY

MST 60 - 80 - 100 - 125

RIELLO ELETTRONICA
riello ups

INTRODUCTION

Thank you for choosing our product.

Our company is highly specialised in the development and production of uninterruptible power supplies (UPS).

The UPS device described in this manual is a high quality product that has been carefully designed and manufactured to guarantee optimal performance.

This manual contains detailed instructions for product use and installation.
This manual must be stored in a safe place and CONSULTED BEFORE DEVICE USE for proper usage instructions as well as maximum performance from the device itself.

NOTE: Some images contained in this document are for information purposes only and may not faithfully demonstrate the parts of the product they represent

ENVIRONMENTAL PROTECTION

Our company devotes abundant resources to analysing environmental aspects in the development of its products. All our products pursue the objectives defined in the environmental management system developed by the company in compliance with applicable standards.

Hazardous materials such as CFCs, HCFCs or asbestos have not been used in this product.

Packaging is composed of RECYCLABLE MATERIALS. Dispose of all material in compliance with applicable standards in the country in which the product is used. Refer to the following table to identify materials:

DESCRIPTION	MATERIAL	
Pallet	Wood (FOR)	50 FOR
Package box	Corrugated cardboard (PAP)	20 PAP
Protective bag	High density polyethylene (PE-HD)	02 PE-HD
Adhesive buffers	Low density polyethylene (PE-HD)	04 PE-LD
Bubble wrap		

DISPOSING OF THE PRODUCT

The UPS contains internal material which (in case of dismantling/disposal) are considered TOXIC AND HAZARDOUS WASTE, such as electronic circuit boards and batteries. Treat these materials according to the laws in force, contacting qualified centres. Proper disposal contributes to respect for the environment and human health.

© The reproduction of any part of this manual, even in part, is prohibited unless authorised by the Manufacturer.
The manufacturer reserves the right to change the product described at any time without prior notice for improvement purposes.

CONTENTS

PRESENTATION 6

MULTI SENTRY 60 – 80 – 100K – 125 KVA 6

UPS VIEWS 7

FRONT VIEW 7

COMMUNICATIONS AREA VIEW 8

SWITCHES VIEW 9

REAR VIEW 10

CONTROL PANEL VIEW 11

UPS CONNECTIONS VIEW 12

MST 60-80-100 CONNECTIONS 12

MST 125 CONNECTIONS 13

SEPARATE BYPASS INPUT (OPTIONAL FOR MST 60-80-100) 14

INSTALLATION 15

INSTALLATION SET-UP 15

UPS STORAGE 15

PRELIMINARY INFORMATION 15

ELECTROMAGNETIC COMPATIBILITY 16

INSTALLATION ENVIRONMENT 16

REMOVING THE UPS FROM THE PALLET 17

CONTENT CHECK 18

UPS POSITIONING 18

ELECTRICAL CONNECTIONS 19

CONNECTION CABLES SECTION 19

ARRANGEMENT OF THE CABLES AND INSERTION OF THE FERRITE TOROIDS 19

PRELIMINARY OPERATIONS FOR CONNECTION 20

HOOKUP INSTRUCTIONS 21

ELECTRICAL SYSTEM CONNECTION DIAGRAMS 22

PROTECTION DEVICES 25

SHORT-CIRCUIT PROTECTION 25

PROTECTION AGAINST BACK-FEED 25

INPUT LINE THERMAL MAGNETIC SWITCHES 25

BATTERY LINE 25

DIFFERENTIAL 26

OUTPUT LINE FUSES/THERMAL MAGNETIC SWITCHES 27

R.E.P.O. 27

EXTERNAL SYNC 28

AUXILIARY CONTACTS 28
EXTERNAL TEMPERATURE SENSOR (OPTIONAL) 29
REMOTE PANEL (OPTIONAL) 29
AUXILIARY SOCKETS (OPTIONAL) 29
ENERGYSHARE 29
AUX OUTPUT 29
REMOTE MAINTENANCE BYPASS 30
USE 31
DESCRIPTION 31
FIRST START-UP AND ADDITIONAL SETTINGS 32
SWITCHING ON FROM THE MAINS 34
SWITCHING ON FROM THE BATTERY 34
SHUTDOWN 34
GRAPHIC DISPLAY 35
DISPLAY MENU 37
OPERATING MODE 38
MANUAL BYPASS (SWMB) 38
REDUNDANT AUXILIARY POWER ADAPTER FOR AUTOMATIC BYPASS 39
POWER WALK-IN 39
DERATING OF POWER FOR 200/208V NEUTRAL-PHASE LOADS 39
UPS CONFIGURATION 40
COMMUNICATION PORTS 42
RS232 AND USB CONNECTORS 42
COMMUNICATION SLOT 42
AS400 PORT 43
ACOUSTIC SIGNAL (BUZZER) 44
SOFTWARE 45
MONITORING AND CONTROL SOFTWARE 45
CONFIGURATION SOFTWARE 45
TROUBLESHOOTING 46
STATUS / ALARM CODES 50
TECHNICAL DATA 54

PRESENTATION

MULTI SENTRY 60 – 80 – 100K – 125 KVA

MST 60 – 80 – 100 – 125 series UPS have been designed using currently available state of the art technology to ensure maximum performance. The use of new control boards based on multiprocessor architecture (DSP + μP) and of special circuit solutions employing the latest generation of components has enabled us to achieve high performance such as:

- ZERO IMPACT SOURCE: ensures low input distortion, power factor close to one and maximum compatibility with the generator
- BATTERY CARE SYSTEM: allows custom handling of batteries for different topologies and continuous monitoring of the same, thus increasing efficiency and duration
- SMART INVERTER: provides extraordinary efficiency even at low load rates and a stable output voltage and low distortion even in the most extreme operating conditions

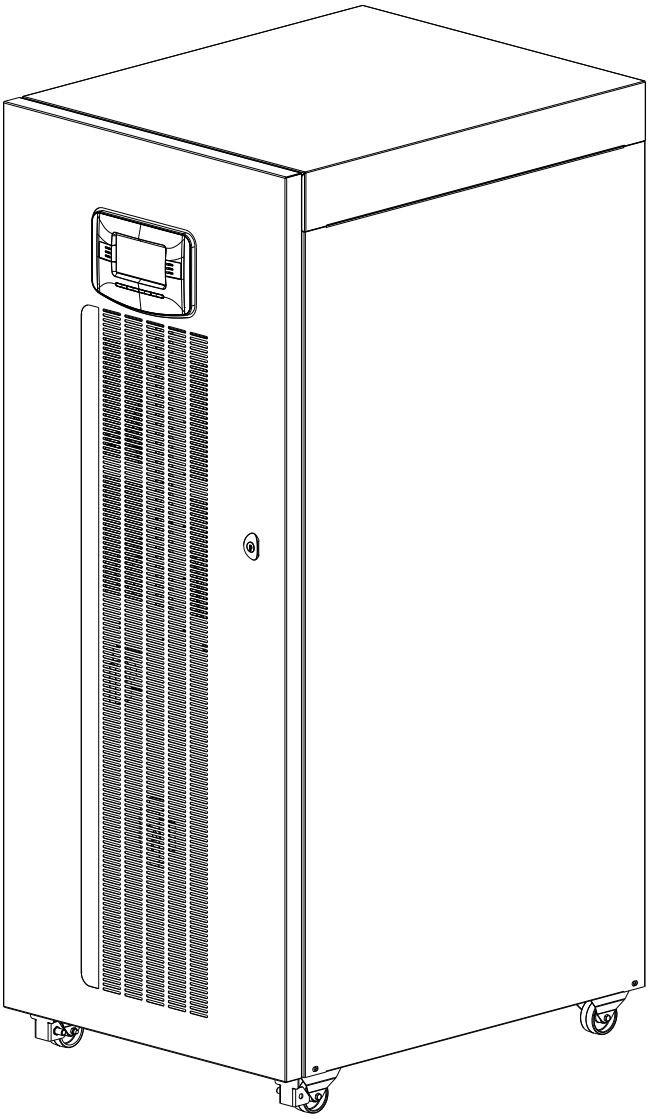

UPS VIEWS

FRONT VIEW

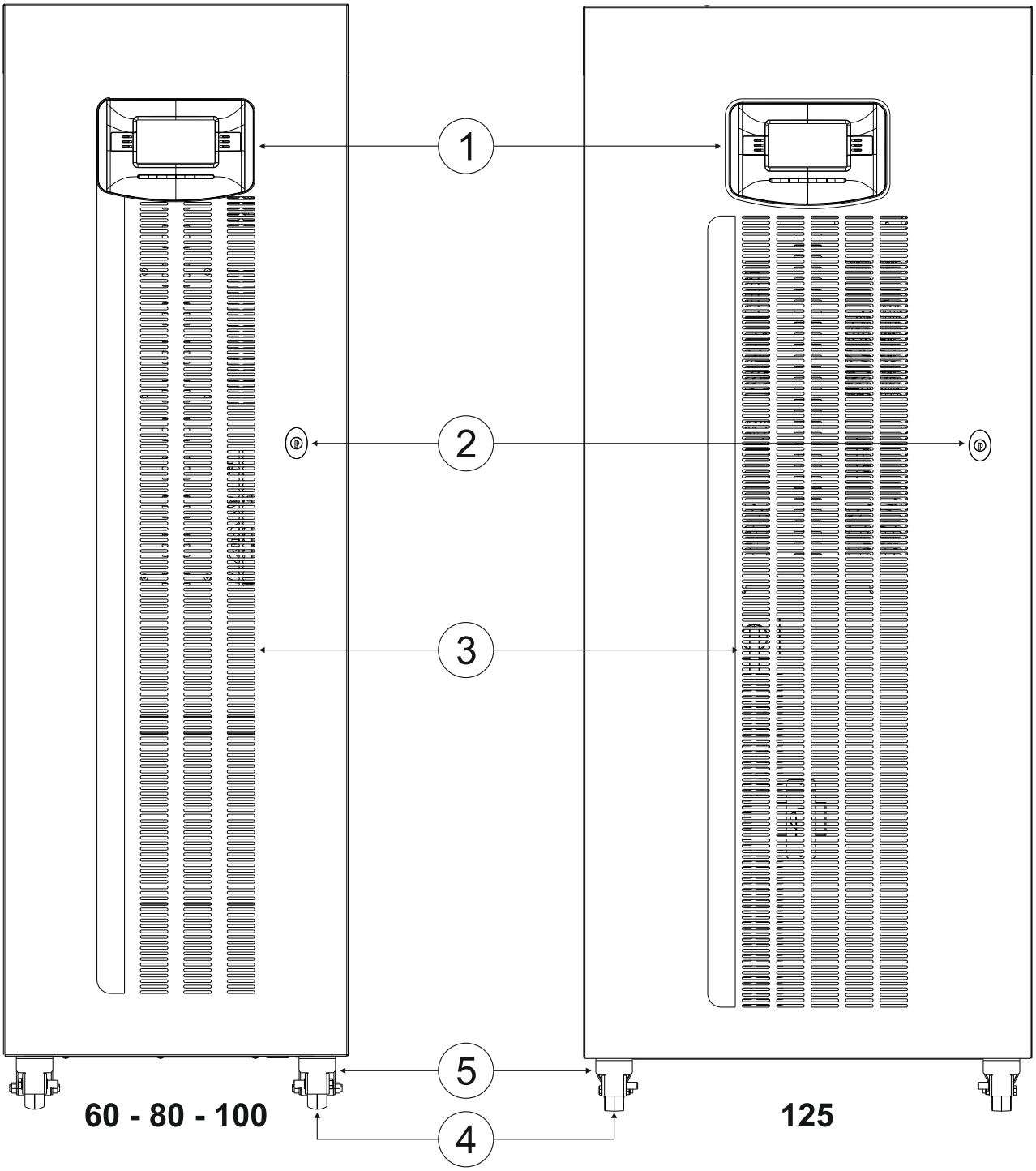

1. Control panel with graphic display
2. Front door with lock
3. Ventilation grille
4. Wheels for UPS handling
5. Parking brakes

COMMUNICATIONS AREA VIEW

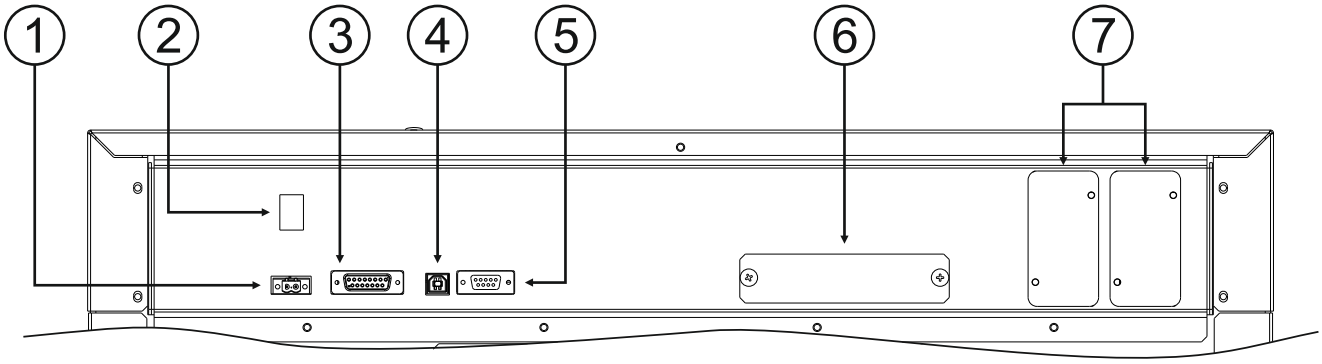

1. "**R.E.P.O.**" Remote Emergency Power Off
2. "**COLD START**" battery start-up button
3. "**AS400**" Contacts port
4. "**USB**" communication port
5. "**RS232**" communication port
6. "**UPS Parallel Board**" housing (optional)
7. Slot for communication accessory boards

SWITCHES VIEW

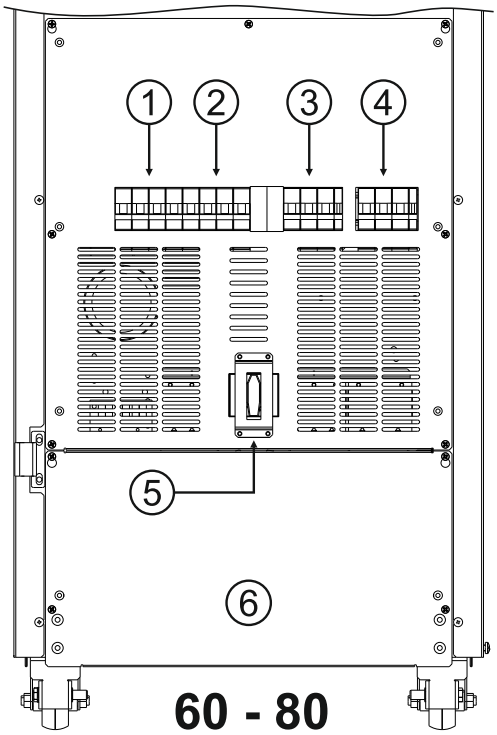

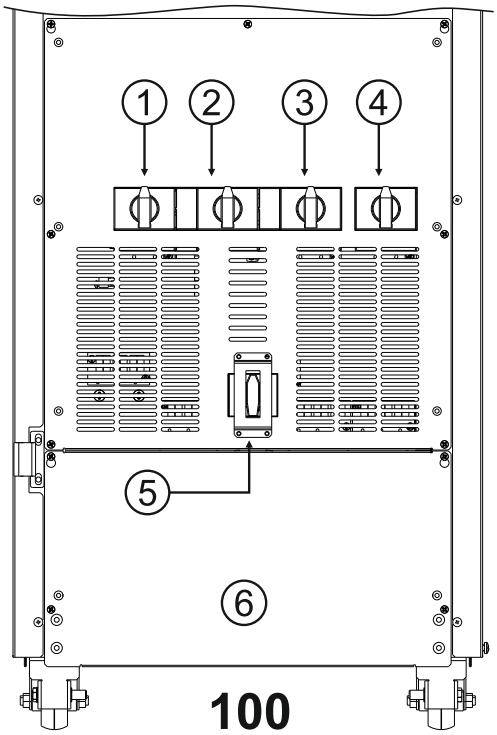

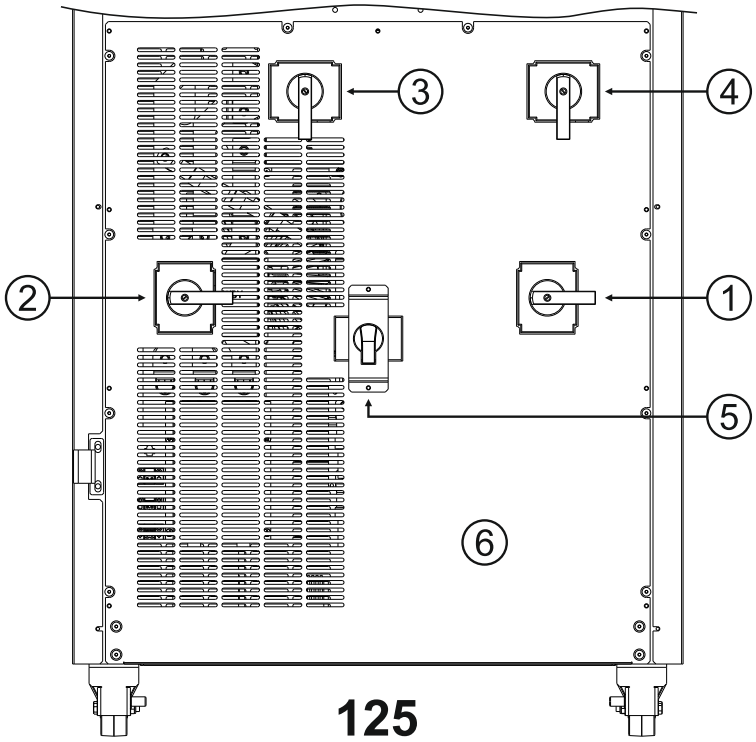

1. "**SWIN**" Input switch
2. "**SWBYP**" Separate bypass switch (optional)
3. "**SWMB**" Manual bypass switch
4. "**SWOUT**" Output switch
5. "**QN**" Switch for service personnel use only
6. Terminal cover (MST 60-100) / bar cover (MST 125)

REAR VIEW

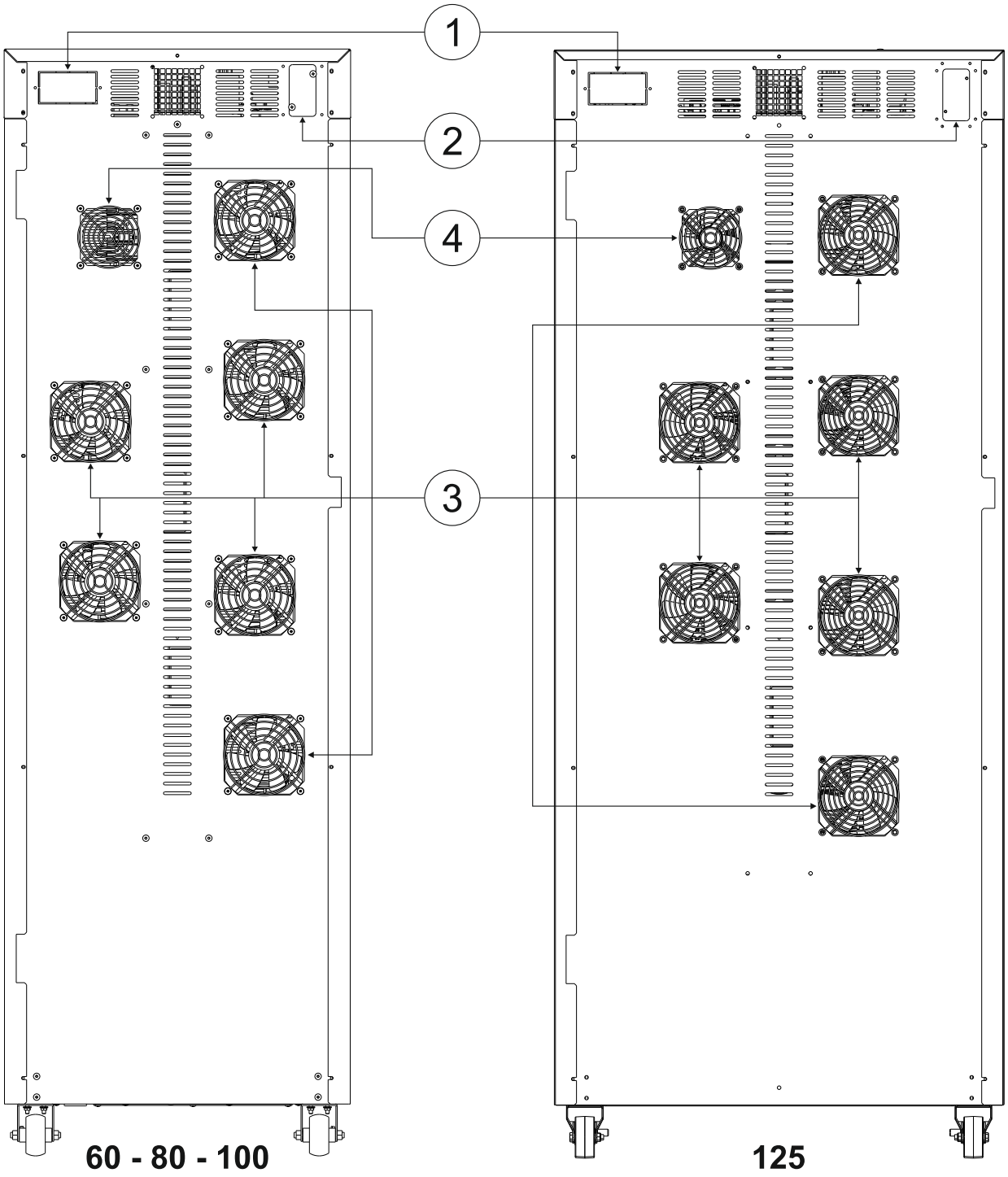

① "**EnergyShare / Aux Output**" sockets (10A max.) and relative protection (optional)

② "**MultiCOM 382 contacts board"** accessory housing

③ Power board fans

④ Battery charger fan

CONTROL PANEL VIEW

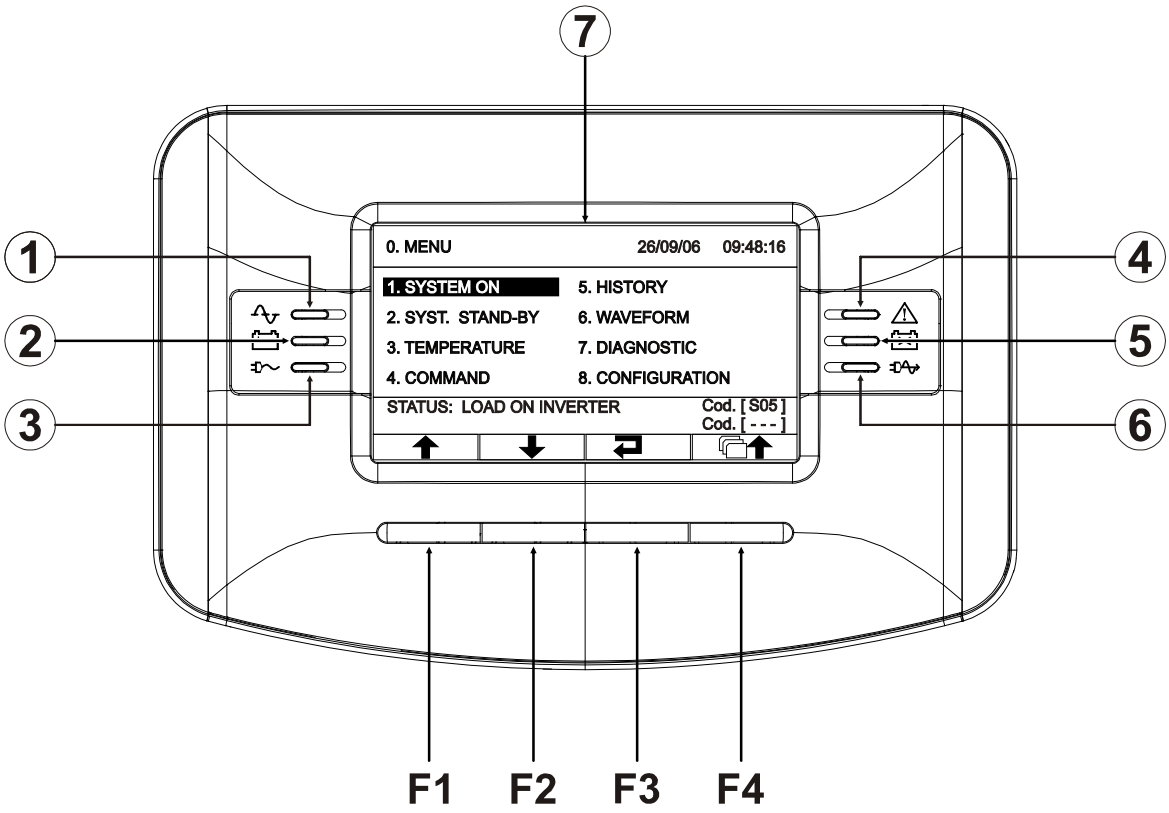

1 **Mains operation LED**
- On *steady:* mains operation with good bypass line and synchronised inverter
- *Flashing:* mains operation with bad or disabled bypass line and/or non-synchronised inverter
- *Flashing in standby*: programmed restart function active and mains present

2 **Battery operation LED**
- *On steady*: battery operation
- *Flashing*: battery operation with early low battery or imminent shutdown warning
- *Flashing in standby*: programmed restart function active and mains absent

3 **Load on bypass LED**
- *On steady*: load powered from bypass line

4 **Standby/alarm LED**
- *On steady*: alarm present
- *Flashing*: standby mode

5 **Replace batteries LED**
- *On steady*: replace batteries
- *Flashing*: batteries overvoltage alarm

6 **ECO mode LED**
- *On steady*: ECO mode configuration active

7 **Graphic display**

F1, F2, F3, F4 = FUNCTION KEYS. Each key's task can be found on the lower part of the display and varies according to menu.

UPS CONNECTIONS VIEW

MST 60-80-100 CONNECTIONS

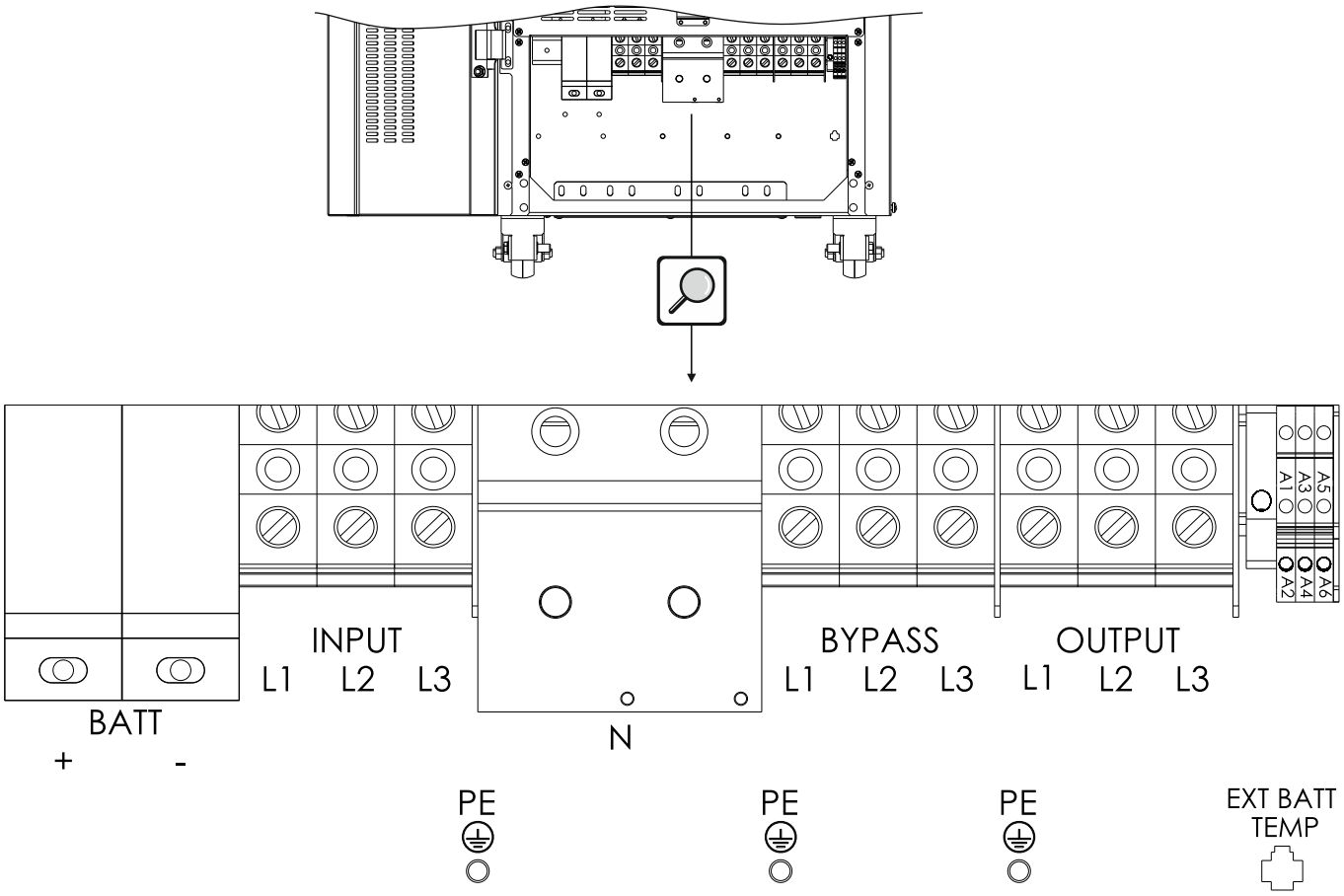

Removing the terminal cover panel to access the UPS terminal board:

BATT (+ -)	Power connections: (+) and (-) BATTERY
INPUT (L1 L2 L3)	Power connections: INPUT PHASES
BYPASS (L1 L2 L3)	Power connections: SEPARATE BYPASS PHASES (optional)
OUTPUT (L1 L2 L3)	Power connections: OUTPUT PHASES
N	Power connections: N BATTERY, N INPUT, N BYPASS, N OUTPUT
PE	Power connections: GROUND
A1 - A2	Connection for external synchronization signal
A3 - A4	Connection for remote auxiliary maintenance bypass
A5 - A6	Connection for remote auxiliary output switch
EXT BATT TEMP	Connection for external battery temperature probe

MST 125 CONNECTIONS

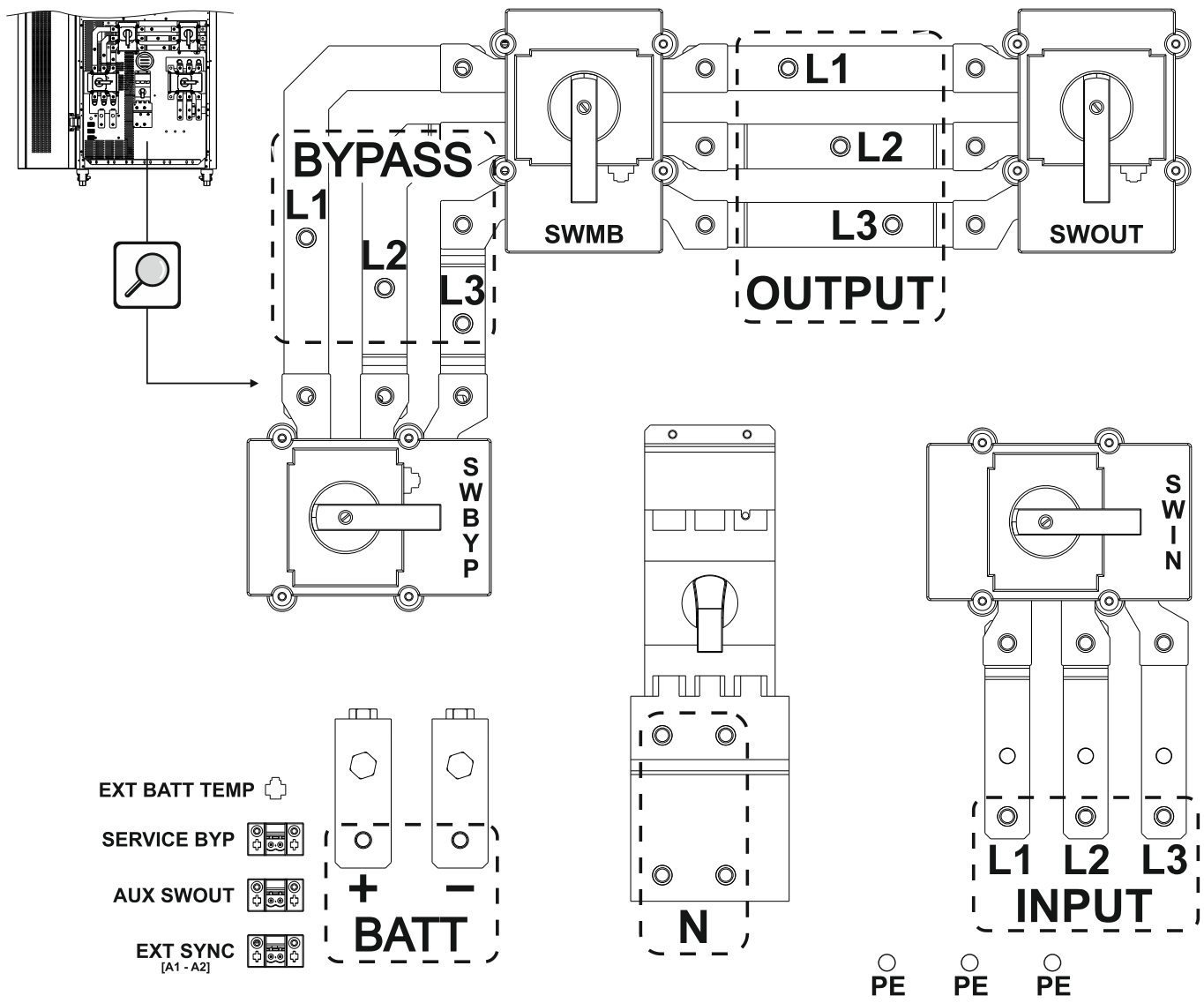

Remove the bar cover to access the UPS's connections:

BATT (+ -)	Power connections: (+) and (-) BATTERY
INPUT (L1 L2 L3)	Power connections: INPUT PHASES
BYPASS (L1 L2 L3)	Power connections: SEPARATE BYPASS PHASES
OUTPUT (L1 L2 L3)	Power connections: OUTPUT PHASES
N	Power connections: N BATTERY, N INPUT, N BYPASS, N OUTPUT
PE	Power connections: GROUND
EXT SYNC [A1 – A2]	Connection for external synchronization signal
SERVICE BYP	Connection for remote auxiliary maintenance bypass
AUX SWOUT	Connection for remote auxiliary output switch
EXT BATT TEMP	Connection for external battery temperature probe

SEPARATE BYPASS INPUT (OPTIONAL FOR MST 60-80-100)

THE "DUALINPUT" UPS SERIES VERSION PRESENTS THE BYPASS LINE SEPARATE FROM THE INPUT LINE.

The UPS series with Separate Bypass allows a separate connection between the input line and the bypass line.
The UPS output will be synchronized to the bypass line in such a way that there will not be any incorrect switching between push-pull voltages in the event of automatic bypass intervention or manual bypass (SWMB) closing.

THE MST 125 CAN BE CONFIGURED EITHER AS DUAL INPUT OR WITH BYPASS CONNECTED TO THE INPUT LINE.

See the following images for how to hook it up in either case

MST 125 - BYPASS CONNECTED TO INPUT LINE

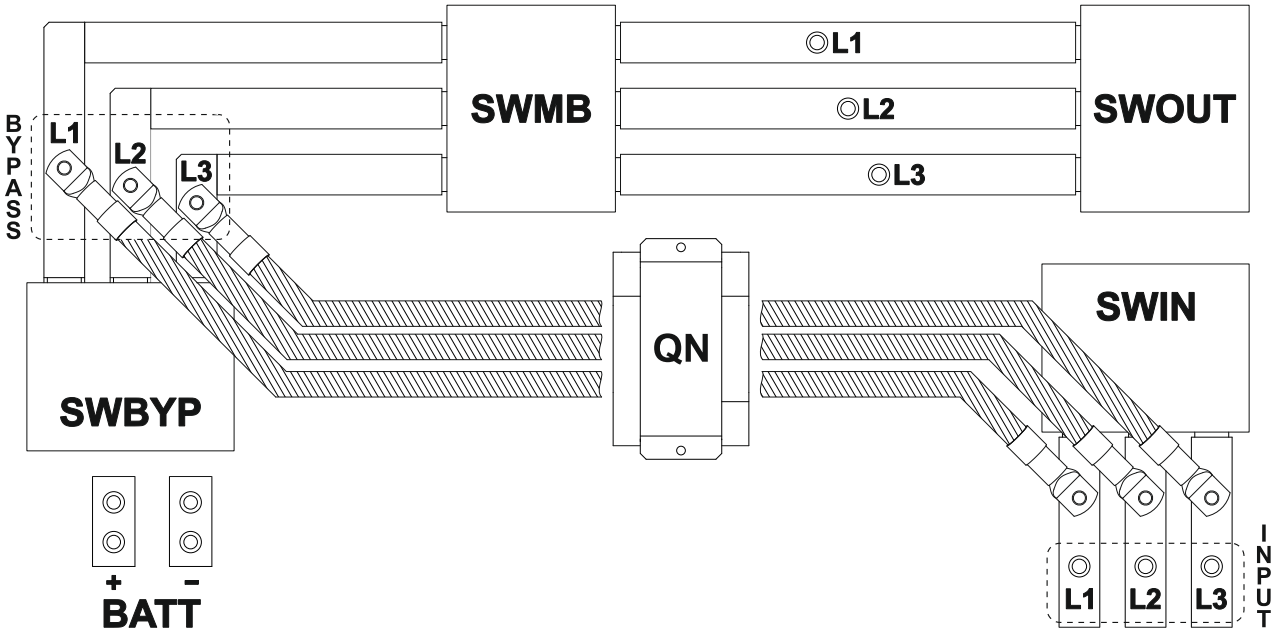

MST 125 – DUAL INPUT

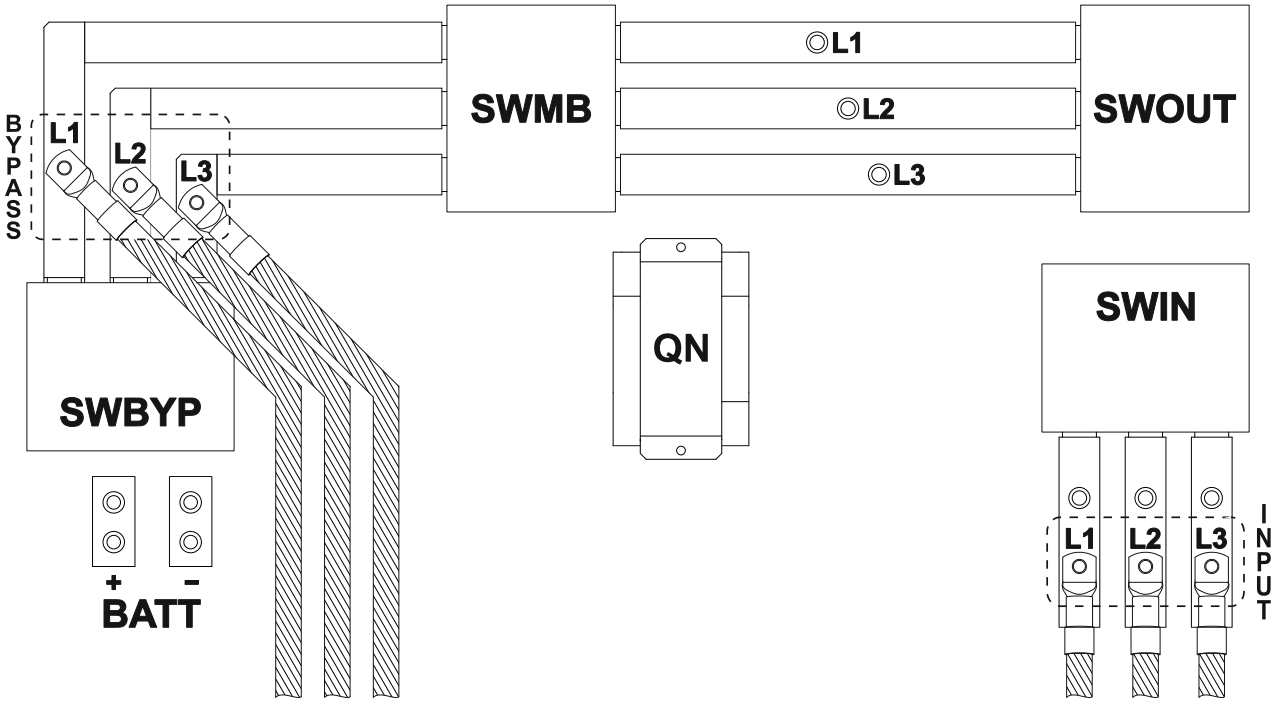

INSTALLATION

INSTALLATION SET-UP

ALL OPERATIONS DESCRIBED IN THIS SECTION MUST BE PERFORMED BY QUALIFIED PERSONNEL ONLY.

Our Company assumes no liability for damages caused by incorrect connections or operations not contained in this manual.

UPS STORAGE

The storage site must meet the following requirements:

Temperature:	-25°÷60°C
Degree of relative humidity:	30÷95% max

PRELIMINARY INFORMATION

UPS Models		MST 60	MST 80	MST 100	MST 125
Nominal power		60kVA	80kVA	100kVA	125kVA
Operating temperature		0 - 40 °C			
Max relative humidity in operation		90 % (without condensation)			
Max installation height		1000 m at nominal power (-1% power for every 100 m above 1000 m) max 4000 m			
Net dimensions	**(W x D x H)**	500 x 850 x 1600 mm			650 x 830 x 1600 mm
Shipping dimensions	**(W x D x H)**	625 x 900 x 1720 mm			780 x 945 x 1745 mm
Net weight		190 kg	200 kg	220 kg	250 kg
Shipping weight		214 kg	224 kg	244 kg	274 kg
Power loss at nominal resistive load (pf=0.9) and with charged batteries (1)		2.61 kW 2245 kcal/h 8910 B.T.U./h	3.65 kW 3140 kcal/h 12460 B.T.U./h	4.75 kW 4074 kcal/h 16170 B.T.U./h	5,32 kW 4575 kcal/h 18160 B.T.U./h
Installation site fan flow rate for heat removal (2)		1400mc/h	2000 mc/h	2600mc/h	3100 mc/h
Current dispersed to ground (3)		< 300 mA			
Degree of protection		IP20			
Cable input		at bottom rear			

(1) 3.97 B.T.U./h = 1 kcal/h

(2) Use the following formula to calculate air flow: Q [mc/h] = 3.1 x P_{diss} [kcal/h] / (t_a - t_e) [°C]
P_{diss} is power dissipation expressed in kcal/h in the installation site for all installed equipment.
ta= room temperature, te=external temperature. Increase the value derived by 10% to account for losses.
An example of flow is shown in the table, with (t_a - t_e)=5°C and with nominal resistive load (pf=0.9).
Notes: The formula applies when ta > te ; if not, the installation requires a conditioner).

(3) The load dispersion current is added to that of the UPS on the ground protection conductor.

ELECTROMAGNETIC COMPATIBILITY

This UPS complies with applicable EMC (Category C3).

ATTENTION:
This product is designed for second environment* commercial and industrial applications - it may be necessary during installation to introduce certain restrictions and take additional measures to prevent disturbances.

Connection to USB and RS232 connectors must be made with the supplied cables or, however, with shielded cables that are no longer than 3 metres.

(*) Type of environment defined in EMC regulations

INSTALLATION ENVIRONMENT

When selecting the installation site of the UPS and any Battery Boxes, observe the following notes:

- avoid dusty environments
- ensure that flooring is flat and able to sustain the weight of the UPS (and Battery Boxes)
- avoid environments that are too narrow which might prevent normal maintenance operations
- relative humidity must not exceed 90%, without condensation
- verify that the room temperature, with the UPS in operation, is maintained between 0 and 40°C

  The UPS is able to operate at a temperature between 0 and 40°C. The recommended operating temperature for the UPS and the batteries is between 20 and 25°C. The actual operating life of the batteries is 5 years on average at an operating temperature of 20°C. If the operating temperature reaches 30°C, the operating life is halved.

- avoid positioning the UPS in places which are exposed to direct sunlight or to hot air

To maintain installation room temperature in the above indicated range, waste heat disposal should be provided for (the value of kW/kcal/h/ B.T.U /h dissipated by the UPS is shown in the table on the previous page). Methods which can be used include:

- *natural ventilation*
- *forced ventilation*, recommended if the external temperature is lower (e.g. 20°C) than the temperature at which you want to operate the UPS and/or the Battery Box (e.g. 25°C)
- *air conditioning system,* recommended if the external temperature is higher (e.g. 30°C) than the temperature at which you want to operate the UPS and/or the Battery Box (e.g. 25°C)

REMOVING THE UPS FROM THE PALLET

ATTENTION: FOLLOW THE INSTRUCTIONS BELOW TO AVOID PERSONAL INJURY AND/OR EQUIPMENT DAMAGE.

SOME OF THE FOLLOWING OPERATIONS REQUIRE THE INTERVENTION OF TWO PEOPLE

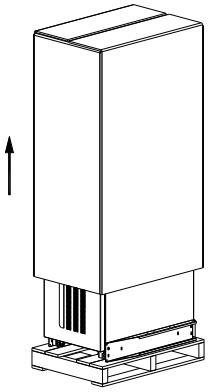

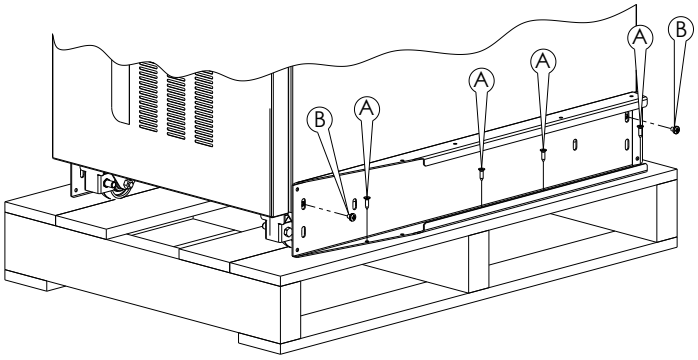

- Cut straps and remove from the cardboard box. Remove the packaging material.
- Remove the accessories container. NOTE: the accessories box may be located inside the packaging or behind the UPS door.

- Remove the 2 brackets fastening the UPS to the pallet, unscrewing the type A and B screws.

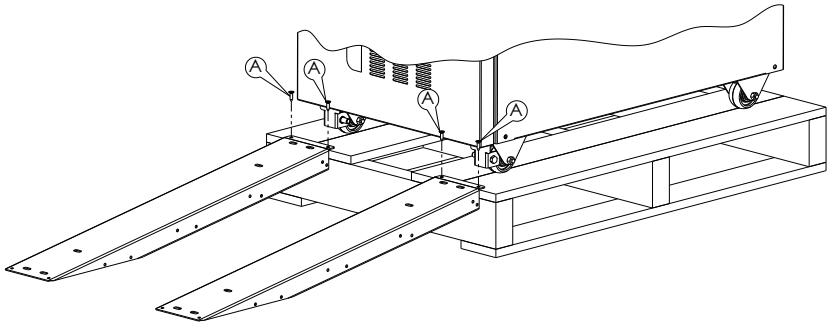

- The previously removed brackets can also to be used as slides. Fasten the slides to the pallet with the use of type A screws, taking care to align the two wheels.

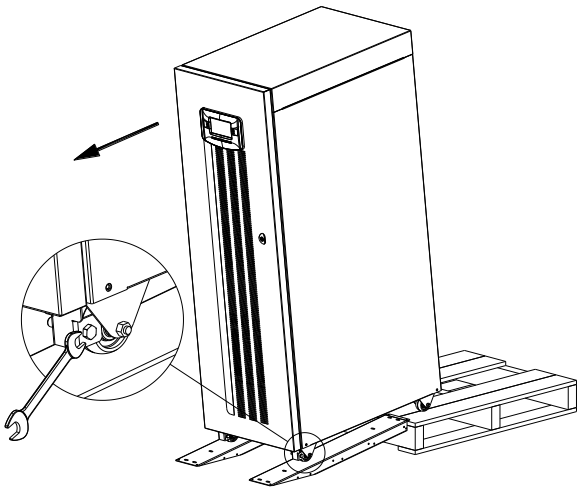

- **If necessary, unblock the front wheel brakes**
- **Ensure that the door is fully closed.**
- **<u>ATTENTION:</u> it is advisable to bring the UPS down by pushing from the rear, using great care and accompanying it as it moves down. Given the weight of the equipment, this requires the work of two people.**

NOTE: retain all packaging materials for future use

CONTENT CHECK

It is first necessary to check the contents after the packaging has been opened:

steel slide, warranty card, instructions manuals, safety manual, inspection certificate, serial connection cable, keys for door lock.

UPS POSITIONING

When positioning, take into account that:

- the wheels are only to be used for accurate positioning, so for short trips
- plastic parts and the door are not able to act as pushing points or handles
- you will need to ensure at least enough free space in front of the equipment to allow for start/stop operations and maintenance (≥ 1.5 m)
- the upper part should be at least 50cm from the ceiling to allow for maintenance operations
- the rear of the UPS must be placed at least 30 cm from the wall for proper air flow blown from air vents
- no objects should rest on the upper part of the UPS

After positioning, block the device by means of the front wheel brakes (see *"Removing the pallet"*).

In earthquake zones or on mobile systems, it is possible to reuse the brackets for pallet fastening (slides) to anchor the UPS to the floor (see figure below). These brackets are not necessary in normal conditions.

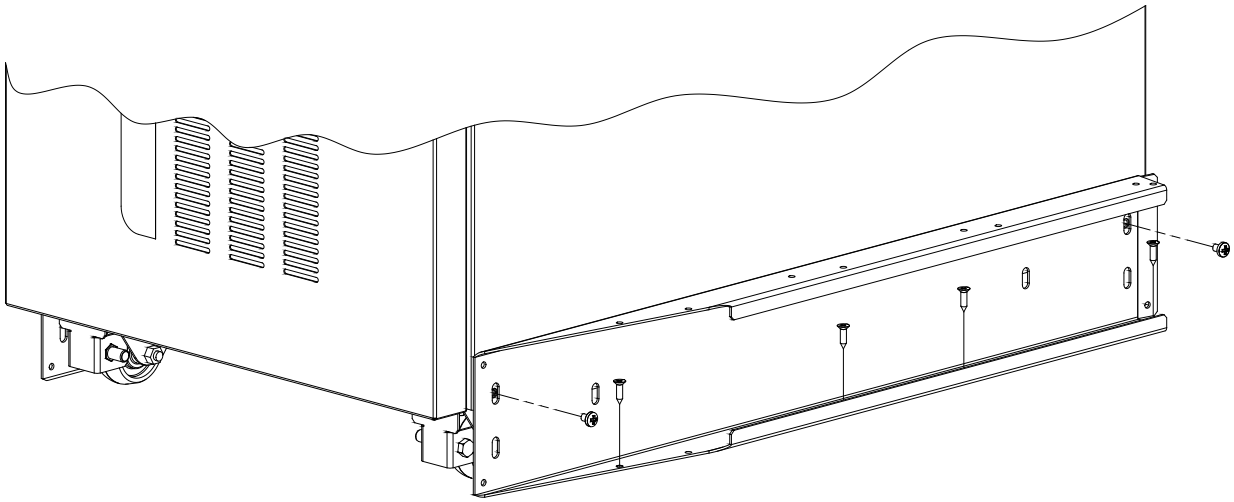

ELECTRICAL CONNECTIONS

CONNECTION CABLES SECTION

Refer to the following table for the sizing of input, output and battery cables:

	Sezione cavi (mmq) (1)								
	INPUT network / separate bypass (optional)			OUTPUT			EXTERNAL BATTERY (2)		
kVA	PE	L1/L2/L3	N (3)	PE	L1/L2/L3	N (3)	PE	+/-	N
60	25	35	35	25	35	35	25	50	50
80	35	50	50	35	50	50	35	70	70
100	50	70	70	50	70	70	50	120	120
125	50	95	95	50	95	95	50	150	150

(1) *The sections contained in the table refer to a maximum length of 10 m (cable type N07V-K in clear air)*

(2) *The maximum length of the connection cables to the Battery Box is 10 metres*

(3) *In the case of non-linear loads, oversize neutral line N by 1.7 times the phase line*

Note MST 60: the maximum section of the cables that can be inserted in the terminal board is equal to 50 mm2 (flexible and rigid cables)
MST 80: the maximum section of the cables that can be inserted in the terminal board is equal to 95 mm2 (flexible and rigid cables)
MST 100 : the maximum cross-section of the cables to insert into the terminals is 95 mm² for the PHASES and 150 mm² for the batteries (flexible and rigid cables).
MST 125: the cables must be fitted with crimp headers for M8 bolts.

ARRANGEMENT OF THE CABLES AND INSERTION OF THE FERRITE TOROIDS

It is recommended to wire the power cables routing them from the back, under the UPS, to the front of the machine, ensuring they come up in the terminal area.
Insert the ferrite toroids supplied as shown below (NOTE: ferrites cannot be fitted to the MST 125)

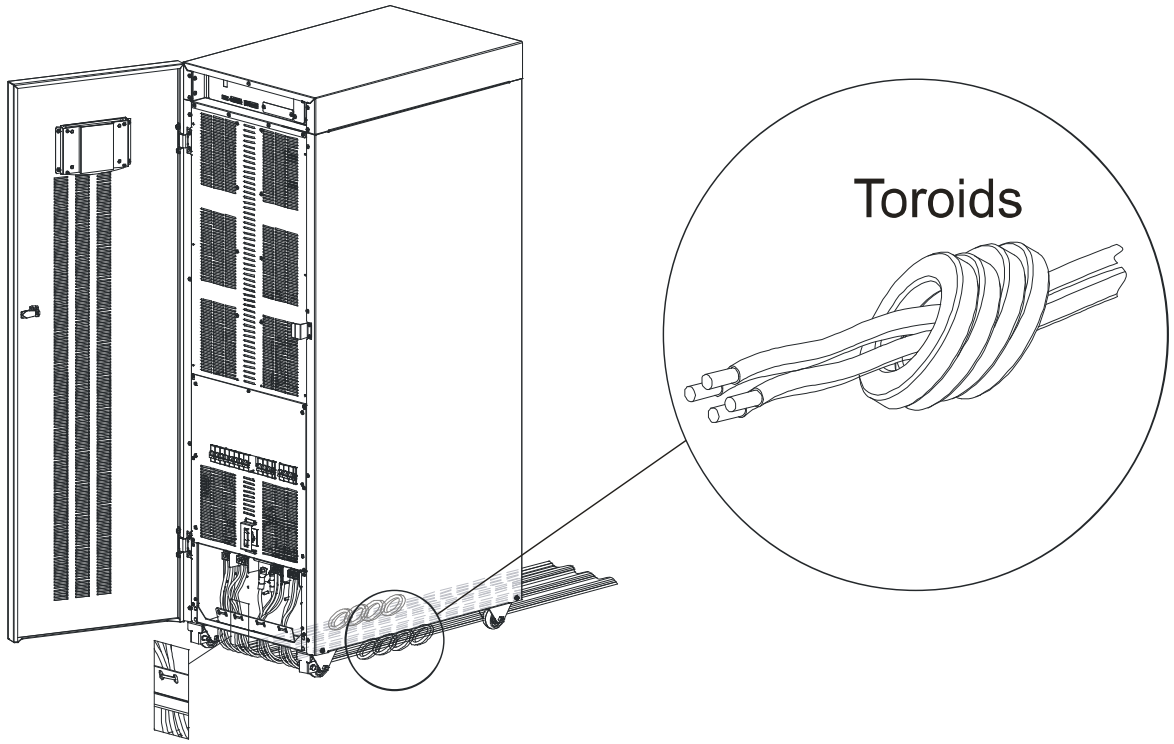

MST 60	MST 80 – MST 100
▪ Insert 3 toroids into the cable bundle [L1, L2, L3, N] INPUT ▪ Insert 3 toroids into the cable bundle [L1, L2, L3, N] OUTPUT. ▪ Arrange the cables so that the toroids are positioned under the base of the UPS or close to it.	▪ Insert 4 toroids into the cable bundle [L1, L2, L3, N] INPUT. ▪ Insert 4 toroids into the cable bundle [L1, L2, L3, N] OUTPUT. ▪ Arrange the cables so that the toroids are positioned under the base of the UPS or close to it.

At the bottom of the units is a holed bar that can be used for a steady anchor for the cables by means of appropriately sized clamps.

Notes:

- Tighten down the clamp only after securing the cables to their terminals/bars.
- Preform the cables so that the terminals/bars are not stressed when you tighten down the clamp.

PRELIMINARY OPERATIONS FOR CONNECTION

The following operations are to be performed with the UPS disconnected from the power mains, off and with all equipment switches open. Before making the connection, open all machine switches and verify that the UPS is completely isolated from power sources: battery and AC power line. In particular, check that:

- the UPS input line is completely disconnected

- the external UPS battery line switch/fuses are open

- all UPS switches: SWIN, SWBYP, SWOUT and SWMB in the open position

- check with a millimetre that there are no dangerous voltages

The first connection to be made is the protective conductor (earth wire), to be connected to the screw marked PE. The UPS must operate while connected to the earthing system.

The input Neutral must always be connected.

ATTENTION: a three-phase four-wire distribution system is required.
The standard UPS version must be connected to a 3 Phase + Neutral + PE (ground protection) TT, TN or IT type power line. Comply with phase rotation
TRANSFORMER BOXES (optional) are available to convert distribution systems from 3-wire to 4-wire.

ATTENTION: in the event of non-linear three-phase loads, the Neutral conductor (N) current can reach a value up to 1.7 times that of the phase current. Properly size the Input/output Neutral line keeping this fact in mind.

Carefully read instructions contained in the Battery Box manual before connecting batteries.

Check that battery voltage is the same as allowed by the UPS (consult the Battery Box data plate and the UPS manual)

ATTENTION: the maximum length of the connection cables to the Battery Box is 10 metres

HOOKUP INSTRUCTIONS

Follow the instructions below in order:

- open the door
- Depending on model: remove the terminal/bar cover (*see "Switches view"*)

MST 125: to remove the bar cover, first remove the handles of the SWIN, SWOUT, SWBYP and SWMB switches by undoing their screws as shown in the image.

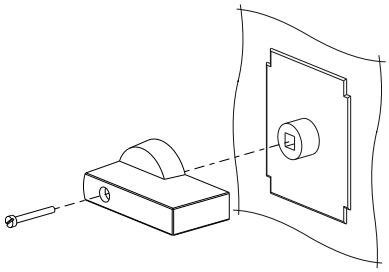

- connect the protective conductor (ground cable) to the PE marked screw.
- Depending on model: connect the input, bypass (if present), output and battery cables to the terminals/bars; follow the hookup indications in *"UPS connections view"*. Connect the N BATT, N INPUT, N BYPASS (if present) and N OUTPUT cables to the neutral bar.

Note: PE M6 screw, N M8 screw

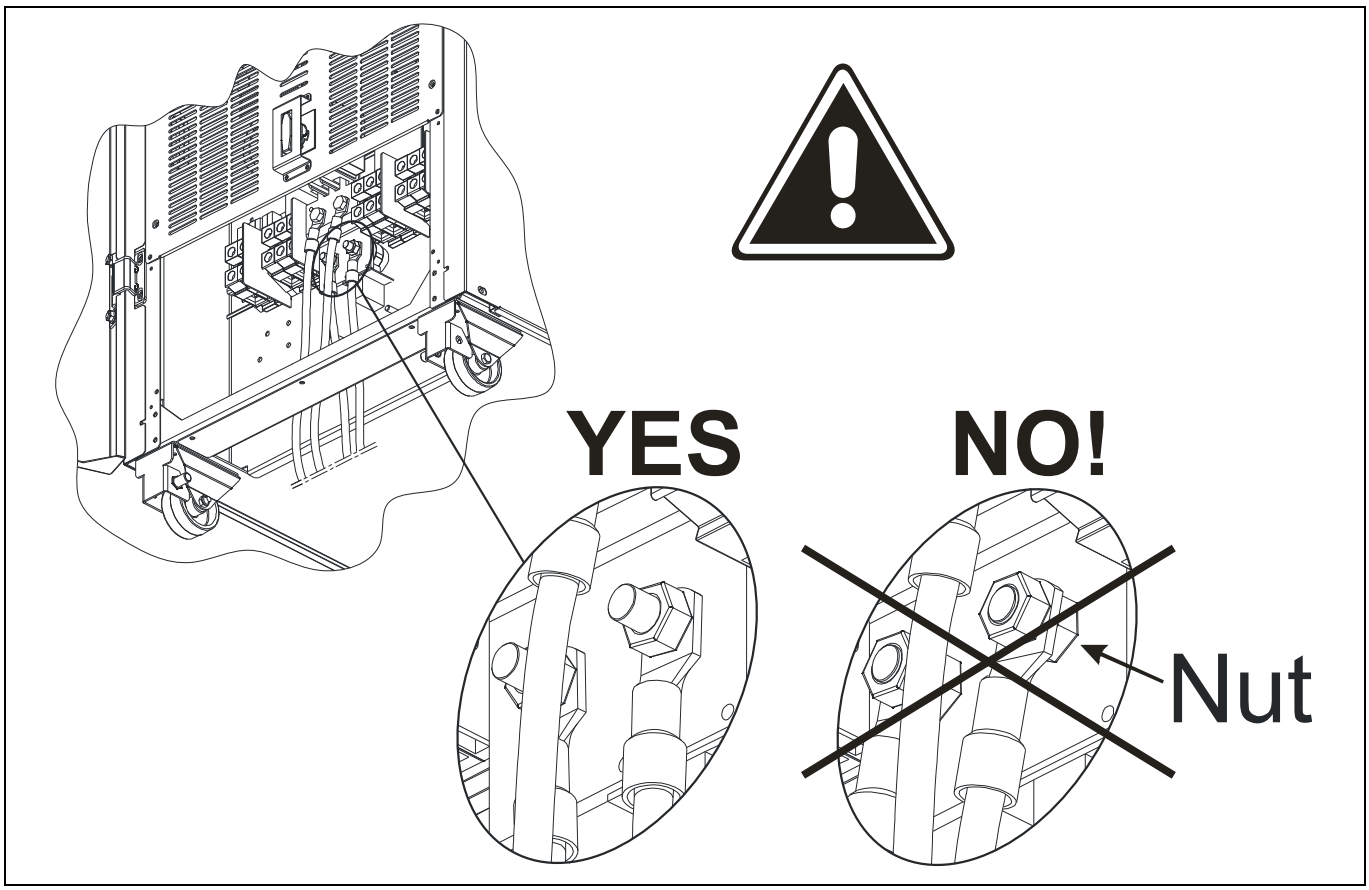

Example image (purely illustrative)

The input and bypass Neutral must always be connected.
The input and bypass lines must be connected to the same potential as of the Neutral.

- Once you have completed the installation and checked the connections (see “First power on and initial settings”), restore the terminal/bar cover.
  MST 125: Restore the switch handles.
- Close the door.

Once installation operations have been completed and connections verified (see paragraph "*First start-up and initial settings*"), restore the terminal cover panel and close the door.

ELECTRICAL SYSTEM CONNECTION DIAGRAMS

UPS without neutral connectivity variation

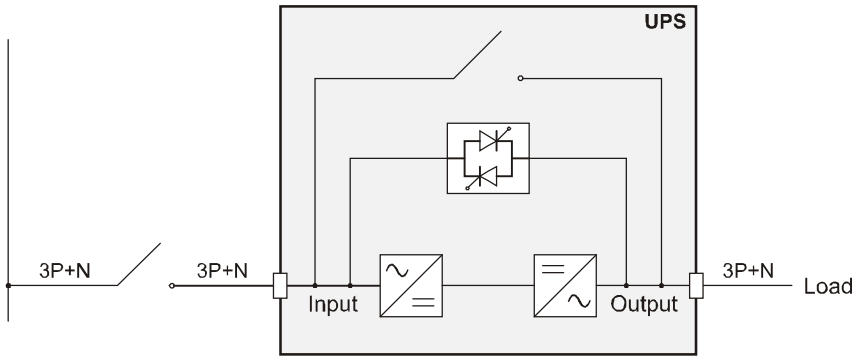

UPS with galvanic input insulation

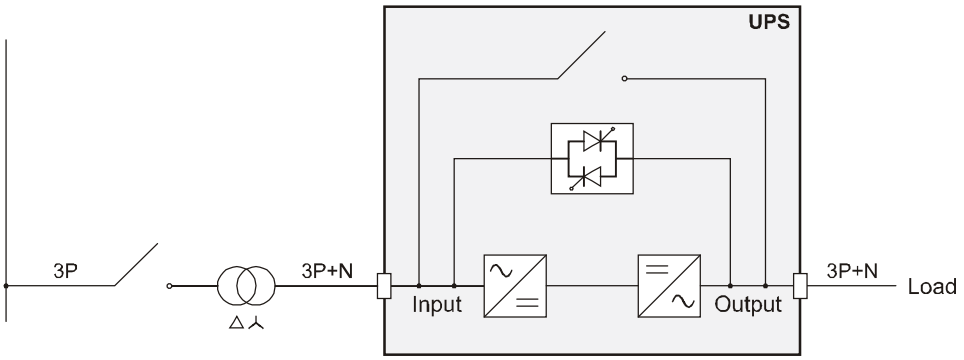

UPS with galvanic output insulation

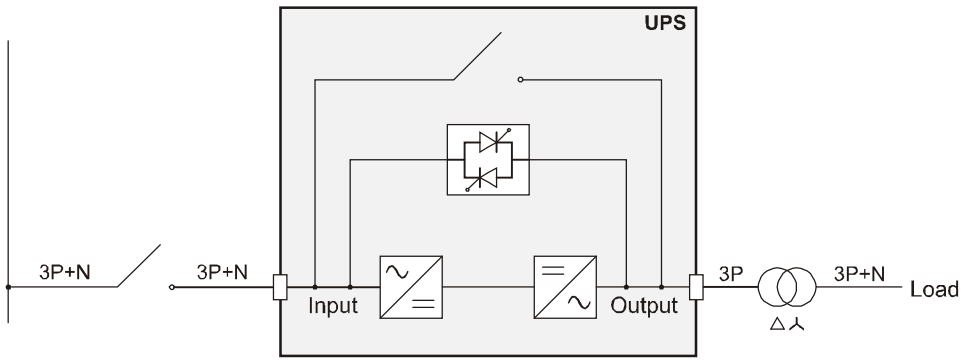

UPS without neutral connectivity variation and with separate bypass input

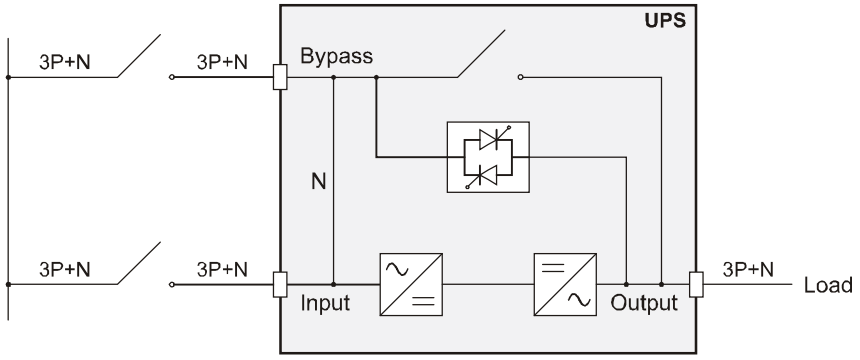

UPS with galvanic input insulation and with separate bypass input

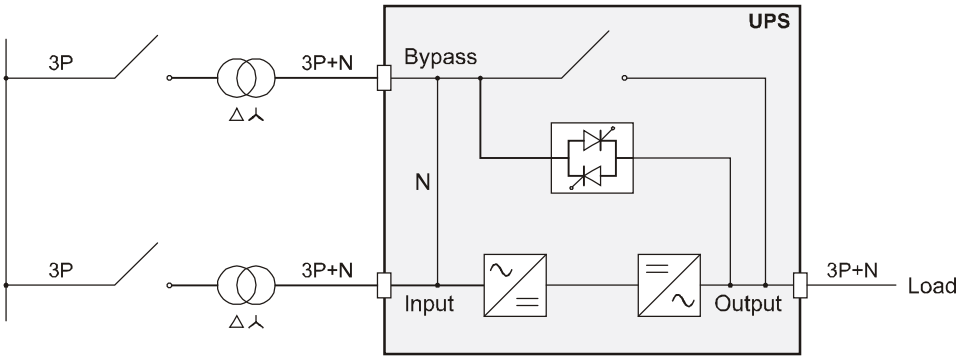

UPS with galvanic output insulation and with separate bypass input

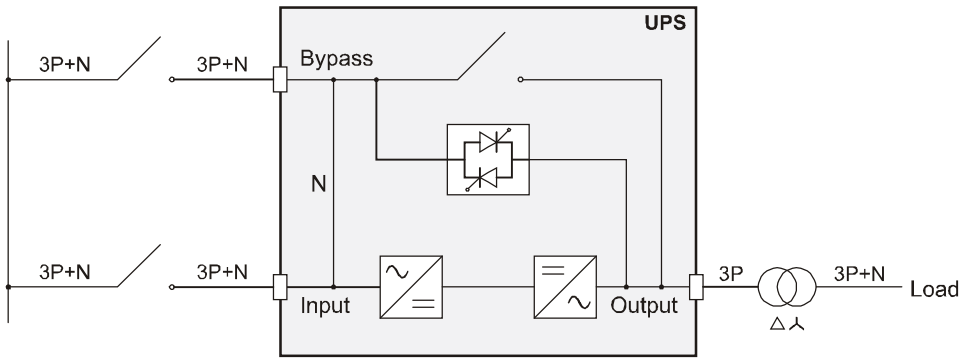

Separate bypass on separate lines:
if the separate bypass option is present, all protective devices will have to be placed both on the main supply line and on the line dedicated to the bypass.
Note: the input line and bypass line neutral are shared inside the device; therefore, they will have to be connected to the same potential. If the two power supplies are different, you must use an isolation transformer on one of the inputs.

UPS without neutral connectivity variation and with separate bypass input connected on an independent power line

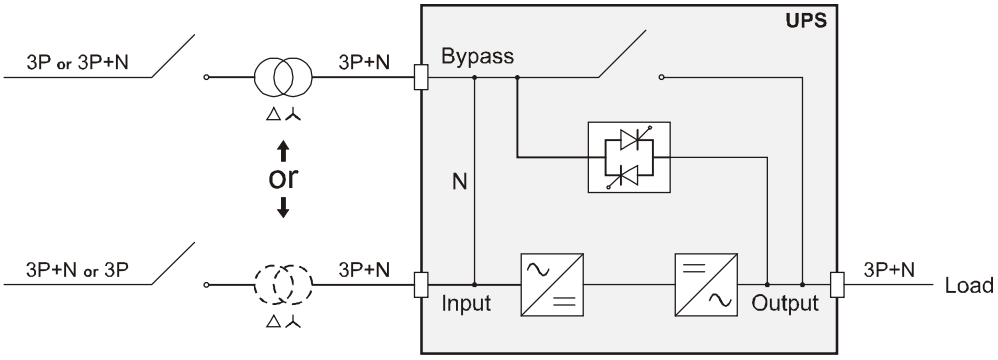

UPS with separate bypass input connected on an independent power line and with galvanic input insulation

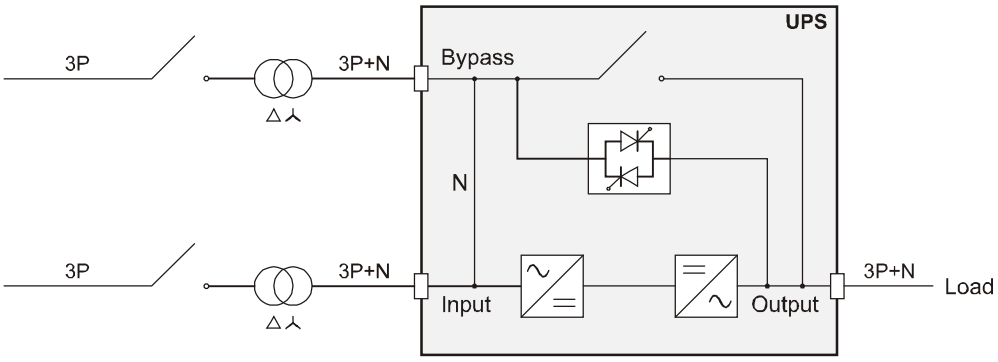

UPS with separate bypass input connected on an independent power line and with galvanic output insulation

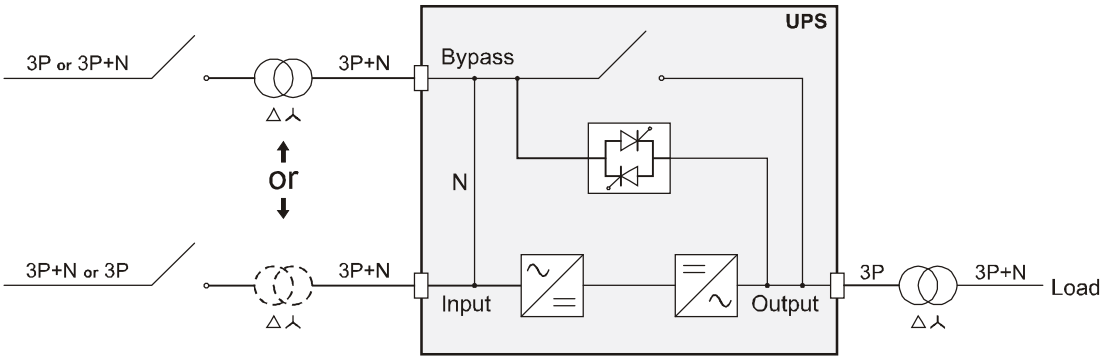

PROTECTION DEVICES

SHORT-CIRCUIT PROTECTION

In the presence of a fault on the load, the UPS limits the value and duration of the output current (short circuit current) for protection. These values are also functions of unit status at the time of the fault. Two different cases can be distinguished:

- UPS in NORMAL OPERATION: load is switched instantly on the bypass line (UPS 60kVA $I^2t=25000A^2s$; UPS 80kVA $I^2t=110000A^2s$; UPS 100kVA $I^2t=145000A^2s$; UPS 125kVA $I^2t=145000A^2s$): the input line is connected to the output without any internal protection (blocked after t>0.5s)
- UPS in BATTERY-LED OPERATION: The UPS protects itself by supplying a current of about 1.5 times the nominal current in output for 0.5s, switching itself off after this amount of time

PROTECTION AGAINST BACK-FEED

The UPS is equipped with internal protection against backfeed via internal metal separation devices (*Inverter contactor*, see *"UPS block diagram"*).

INPUT LINE THERMAL MAGNETIC SWITCHES

Install a trip switch a with C (or D based on the type of load) trip curve on the power supply line upstream of the UPS, following the information given in the table below:

	Automatic external AC protections *	
Mod. UPS	Network input	Separate bypass input (optional for MST 60-80-100)
60kVA	100A	100A
80kVA	125A	125A
100kVA	160A	160A
125kVA	250A	250A

** In the case of non-linear loads, properly oversize neutral line N after on-site assessment*

If the protection device upstream to the UPS interrupts the neutral conductor, all phase conductors must also be interrupted at the same time (4-pole switch).

BATTERY LINE

Surge protector and a cut-off device must be provided on the UPS external battery line.
The size and type of fuses must be selected on the basis of the capacity of the installed battery box, referring to the table below.

	External DC protections	
Mod. UPS	Fuse type	Fuse size [A]
60kVA	gl / gG	2 x capacity in Ah of the battery up to max 150A
	aR	2.5 x capacity in Ah of the battery up to max 150A
80kVA	gl / gG	2 x capacity in Ah of the battery up to max 200A
	aR	2.5 x capacity in Ah of the battery up to max 200A
100kVA	gl / gG	2 x capacity in Ah of the battery up to max 250A
	aR	2.5 x capacity in Ah of the battery up to max 250A
125kVA	gl / gG	2 x capacity in Ah of the battery
	aR	2.5 x capacity in Ah of the battery

Example: the following fuses can be used with UPS 60kVA and 65Ah batteries: 125A (130A) gl/gG or 150A type aR

Ensure that the UPS has been fully switched off before handling the external UPS battery line switch/fuses

DIFFERENTIAL

In the absence of an input separating transformer, the neutral from the mains power supply is connected to the neutral of the UPS output. This way the neutral regime of the equipment is not modified.

THE INPUT NEUTRAL IS CONNECTED TO THE OUTPUT NEUTRAL
THE DISTRIBUTION SYSTEM THAT POWERS THE UPS IS NOT MODIFIED BY THE UPS

WARNING: make sure that the equipment is connected correctly to the input neutral, or else damages to the UPS may be caused.
The neutral regime is modified only in presence of an isolation transformer or when the UPS operates with a neutral isolated upstream.

DUAL INPUT versions: *the neutral for the input line and bypass line are shared inside the device.*
A single differential switch must be fitted upstream of the point at which the line divides to supply the trip switch-protected rectifier and bypass inputs for the UPS. See following diagram:

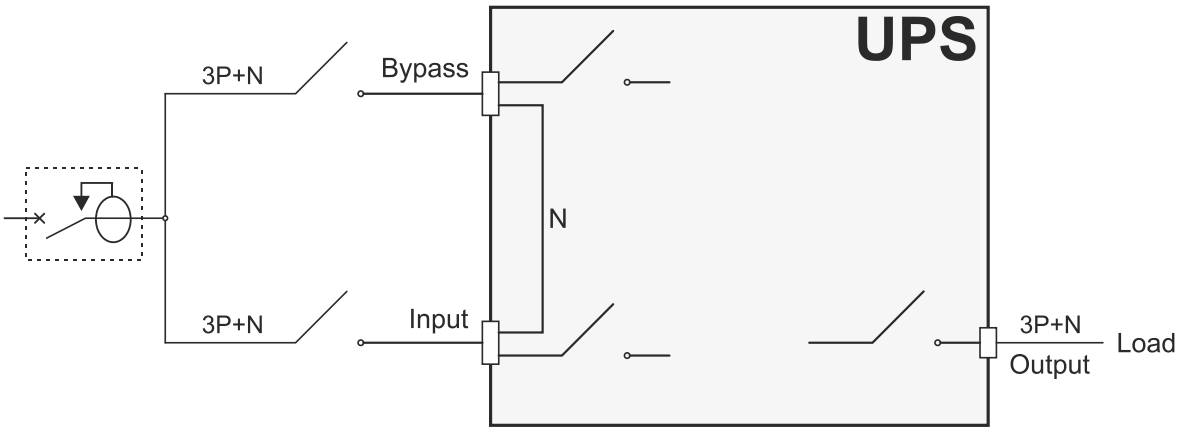

PARALLEL versions: *In order to prevent false activations where several machines are connected in parallel, a single differential switch should be fitted upstream of the entire system. See following diagram:*

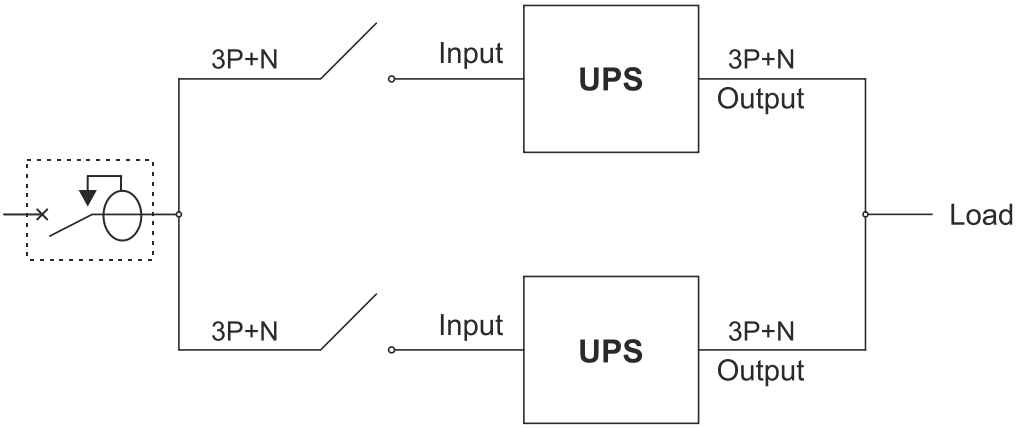

When operating from mains power, a differential switch located at the input can intervene as the output circuit is not isolated from the input circuit. Anyhow, other differential switches can be inserted at the output, possibly coordinated with the switches at the input.
The differential switch located upstream must have the following features:

- Differential current adjusted to the sum of the UPS load. It is strongly recommended to keep an adequate margin in order to avoid delayed interventions (100mA min. - 300mA recommended)
- type B
- delay greater than or equal to 0,1s

OUTPUT LINE FUSES/THERMAL MAGNETIC SWITCHES

Output protections (recommended values for selectivity)		
	MST 60 – MST 80 – MST100	**MST 125**
Normal fuses (gL-gG)	In (Nominal current)/7	In (Nominal current)/4
Thermal magnetic switches (C Curve)	In (Nominal current)/7	In (Nominal current)/4

R.E.P.O.

This isolated input can be used to remotely switch off the UPS in case of emergency.
The UPS is supplied with "Remote Emergency Power Off" (R.E.P.O.) terminals short-circuited by a jumper (see "*Communications area view*"). To manage emergency shutdown, replace the jumper with the selected normally closed stop device contact. Connect using double insulation wiring.
In case of an emergency, the stop device opens the R.E.P.O. control and the UPS goes into stand-by mode (all power stages off) and the load is completely disconnected.

The R.E.P.O. circuit is self-powered with SELV circuits. Therefore, an external voltage supply is not required. When closed (normal condition), a current of 15mA max circulates.

EXTERNAL SYNC

This non-isolated input is used to synchronize the inverter output with a suitable signal coming from an external source.
To install:

- use an isolation transformer with isolated single-phase output (SELV) within range 12-24V AC with ≥ 0.5VA power
- connect the transformer primary to the external synchronization source, respecting the polarity indicated in the following image
- connect the transformer secondary to terminals **A1-A2 "EXTERNAL SYNC"** (see *"UPS connections view"*) by means of a double insulation cable with 1 mm2 section. Attention: respect polarisation as indicated in the following image:

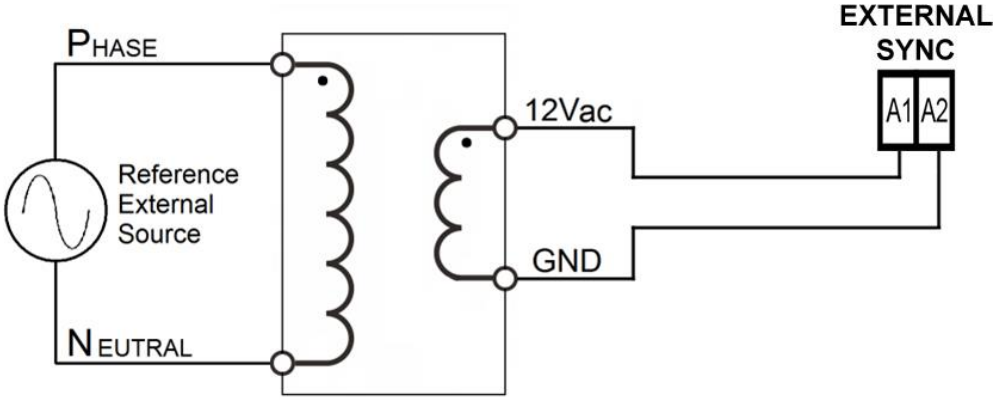

A special optional kit is available for external synchronization connection.

After installation, enable this option by means of the configuration software.

AUXILIARY CONTACTS

Terminals for connecting auxiliary contacts of the remote maintenance and remote output bypass switches are available in the UPS connection zone. These are identified, respectively, by the words "SERVICE BYPASS" and "AUX SWOUT".
For installation, refer to paragraphs "*UPS connections view*" and "*Remote maintenance bypass*"

A3-A4 SERVICE BYPASS

- Before connecting, remove the pre-assembled jumper
- When the remote maintenance bypass switch is closed, the relative auxiliary contact should open

A5-A6 AUX SWOUT

- When the remote output switch is closed, the relative auxiliary contact should open

Use a double insulation cable with 1 mm2 section for terminal connection

ATTENTION: in the case of parallel systems, each single UPS must have its own independent external auxiliary contact

EXTERNAL TEMPERATURE SENSOR (OPTIONAL)

This NON-ISOLATED input is used to detect temperature inside a remote Battery Box.

Only use the special kit (optional) supplied by the manufacturer: any uses which do not conform to specifications may cause malfunction or equipment breakage.

For installation, connect the cable contained in the special kit (optional) to the "EXT BATT TEMP" connector (see "*UPS connections view*") following instructions contained in the relative manual.
After installation, enable this external temperature measuring function by means of the configuration software.

REMOTE PANEL (OPTIONAL)

The remote panel (optional) allows you to monitor the UPS from a distance and thus have a detailed, real-time overview of machine status. Using this type of device, network, output, battery measurements etc. can be viewed and any alarms detected.

For details related to use and connections, refer to the appropriate manual.

AUXILIARY SOCKETS (OPTIONAL)

ENERGYSHARE

Programmable output socket (optional) which allows automatic disconnection of the load applied to it under certain operating conditions. Events that determine automatic disconnection of the EnergyShare socket can be selected by the user through the configuration software. It is possible, for example, to select detachment after a certain period of battery operation, or when the pre-alarm threshold for battery discharge has been reached, or when an overload occurs.

AUX OUTPUT

Output socket (optional) directly connected to the UPS output; It caters auxiliary power supply (230V / max 10A)

Notes regarding safety: *if the output switch (SWOUT) is opened while the UPS is on, both sockets remain powered.*
If a manual bypass switch (SWMB) is inserted, the output switch (SWOUT) is opened and the UPS switches off and both sockets will no longer be powered.

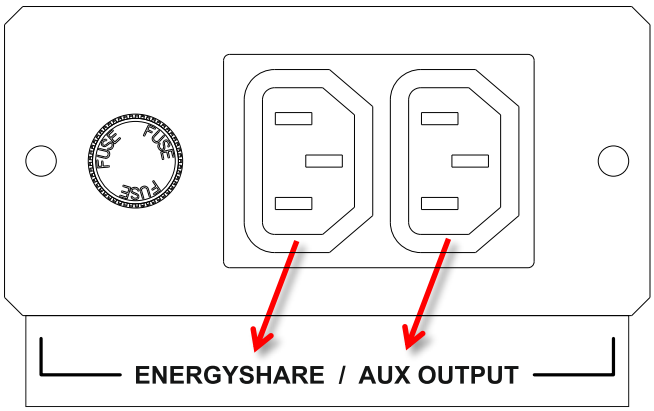

REMOTE MAINTENANCE BYPASS

Attention: carefully read the “Manual bypass (SWMB)” paragraph
A maintenance bypass (manual bypass) can be installed additionally on a peripheral electrical board (see following diagram). This allows, for example, UPS replacement without interrupting power to the load.

The "SERVICE BYPASS" (see "UPS connections view") terminal absolutely must be connected to the auxiliary contact of the REMOTE MAINTENANCE BYPASS SWITCH (3). When this switch closes, an auxiliary contact signalling insertion of the remote bypass to the UPS must open. Failure to perform this connection can cause power cut-off to the load and UPS damage.

- Use switches and power cables suitable for UPS currents.
- Use a double insulation cable with a 1mm2 section for connecting "SERVICE BYPASS" and "AUX SWOUT" terminals to relative REMOTE MAINTENANCE BYPASS (3) and OUTPUT (2) switch auxiliary contacts.
- Verify compatibility between the "Remote maintenance bypass" and neutral connectivity of the system.

REMOTE MAINTENANCE BYPASS INSTALLATION DIAGRAM

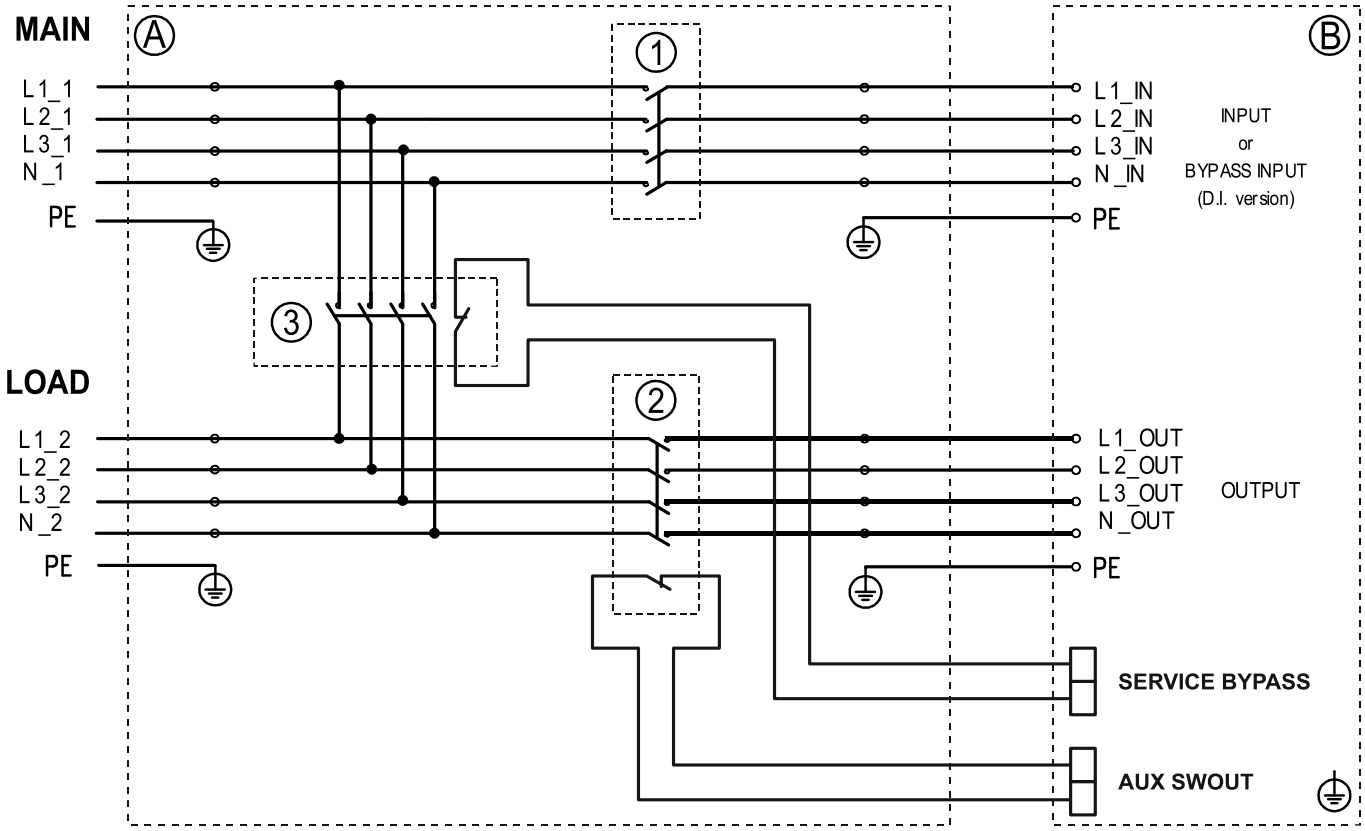

Ⓐ Peripheral electrical board

Ⓑ Internal UPS connections

① Electrical board INPUT SWITCH

② Electrical board OUTPUT SWITCH: equipped with normally closed auxiliary contact (advanced)

③ Electrical board REMOTE MAINTENANCE BYPASS SWITCH: equipped with normally closed auxiliary contact (advanced)

USE

DESCRIPTION

The purpose of the UPS is to ensure perfect supply voltage to the equipment connected to it, both in the presence and absence of mains power. Once connected and powered, the UPS generates alternating sinusoidal voltage with stable range and frequency, regardless of sudden changes and/or variations on the mains power. As long as the UPS draws power from the mains, the batteries are kept charged under the control of a multiprocessor board. This board constantly monitors mains voltage range and frequency and the range and frequency of voltage generated by the inverter, applied load, internal temperature and battery efficiency conditions.
The following is a block diagram of the UPS which describes the individual components that it is composed of.

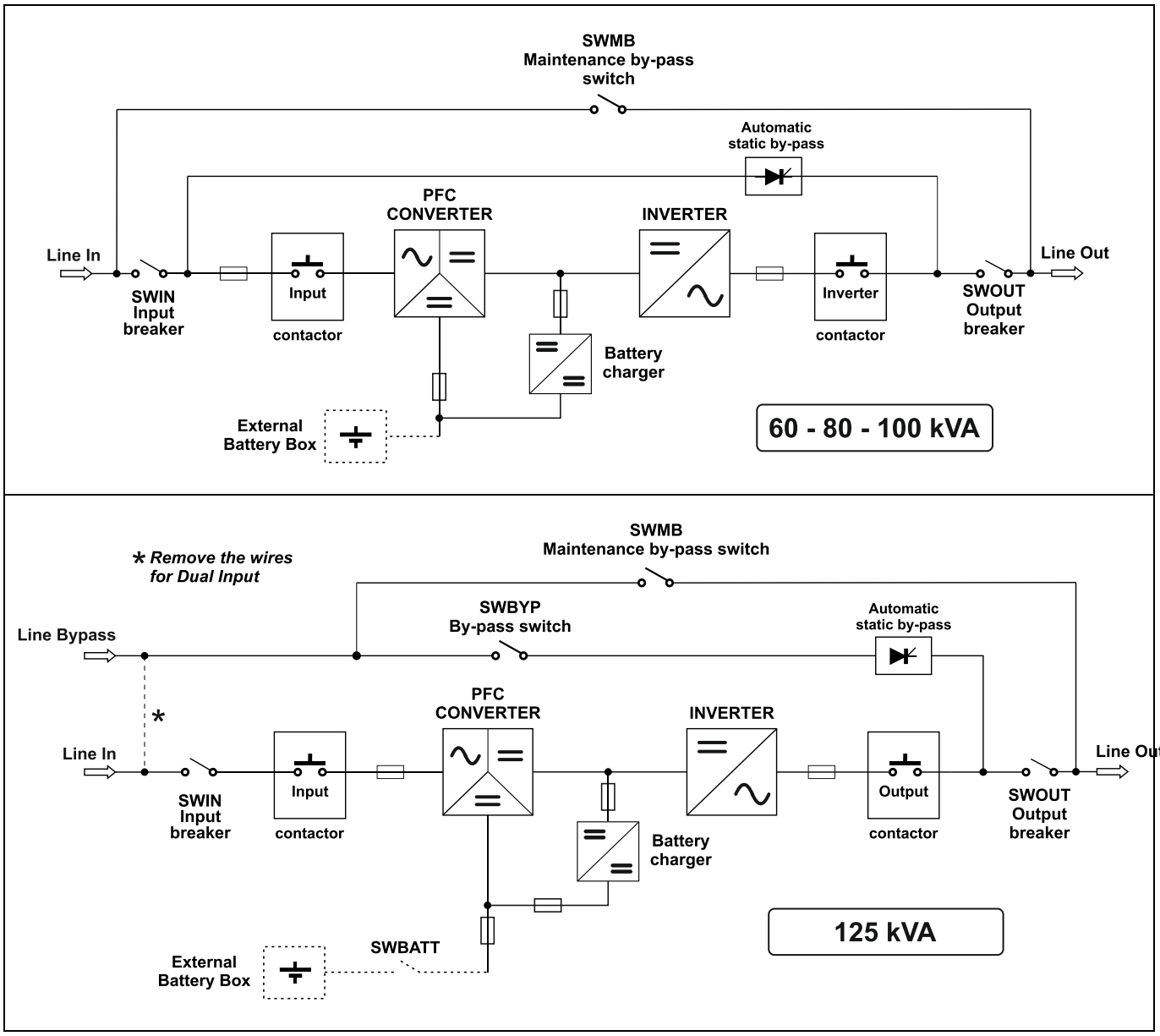

UPS block diagram

IMPORTANT: Our UPS have been designed and built for long-term duration even in the most demanding operating conditions. Please remember however that these are electrical power devices and, as such, they require periodic inspections. In addition, some components inevitably have their own life cycles and, therefore, they must be checked periodically and replaced if necessary: in particular, the batteries, fans and, in some cases, the electrolytic capacitors.
It is therefore recommended to implement a preventive maintenance programme, to be entrusted to manufacturer authorised, qualified personnel.
Our Technical Assistance is at your service to propose different preventive maintenance options tailored to your specific needs.

FIRST START-UP AND ADDITIONAL SETTINGS

ATTENTION: <u>the QN switch is for Service personnel use only and must remain closed with its safety lock.</u> Only the following switches can be handled: SWIN, SWBYP (if present), SWOUT, external UPS battery line switch and, necessary, SWMB (see paragraph "Manual bypass (SWMB)")

- **Visual connection inspection**
  Check that all connections have carefully been made according to the paragraph *"Electrical connections."*
  Check that all switches are open (except for the QN switch, locked in the closed position).

- **Closing the external UPS battery line switch/fuses**
  After having checked proper connection polarity, close the external UPS battery line switch/fuses

Attention: any connection made not in compliance with instructions stated in paragraph "Electrical connections" may have damaged the battery fuses and other protections; in this case, call for assistance to avoid further damage to the UPS.

- **UPS Power**
  Close protections upstream to the UPS.

- **Closing the SWMB Manual bypass switch**
  Close the SWMB manual bypass switch and check that output voltage is present.
  <u>Re-open the SWMB switch</u>.

- **Closing input switches**
  Close the SWIN and SWBYP input switches (if present).

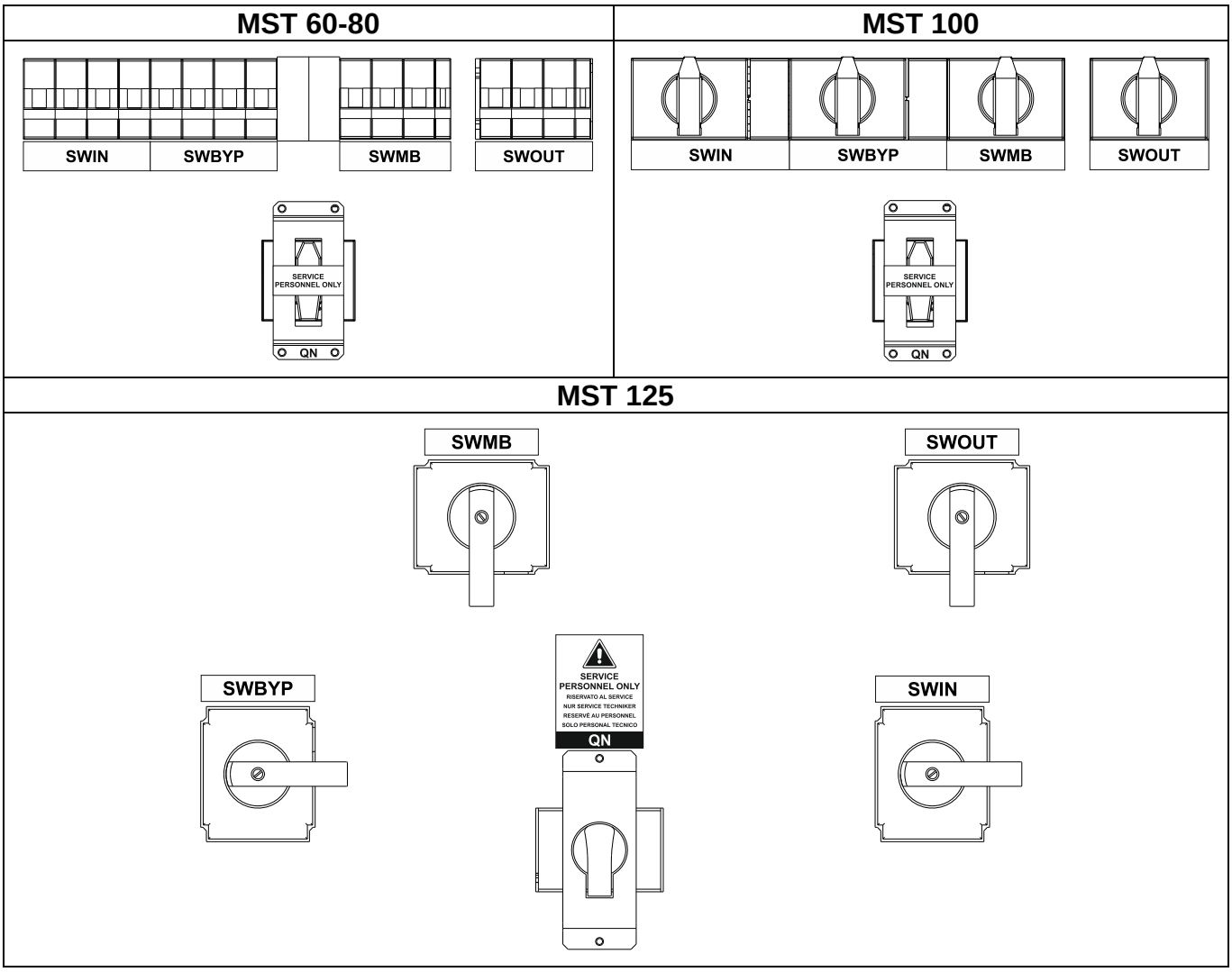

- Wait a few seconds after SWIN closing. Check that the display switches on and that the UPS is set to "STAND-BY" mode.

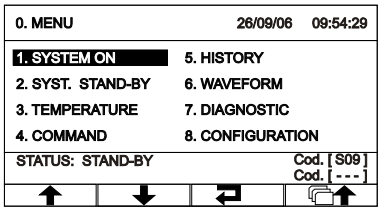

Follow the instructions below if a message indicating an erred phase cycle direction appears on the display:

- check if the error code corresponds to the input or the bypass (only for separate bypass models)
- open all switches and input and output
- wait for the display to switch off
- open the external UPS battery line switches/fuses
- open all protections upstream to the UPS
- remove the terminal cover protective panel
- correct the position of cables relative to the signalled terminal board so that they follow phase cycle direction
- re-close the terminal cover protective panel
- repeat the preliminary operations contained on the previous page

- Refer to "*Graphic display*" and "*Display menu*" paragraphs for control panel management
- **<u>Setting the nominal battery capacity</u>**

  <u>ATTENTION</u>: you must configure the UPS to set the correct values of total nominal capacity of the battery. This operation must be performed by means of the configuration software reserved for Service personnel only.

- From the main menu, press ↵ to enter into the start menu. When asked to confirm, select "YES", press ↵ to confirm and wait a few seconds. Verify that the UPS is set to status with the inverter-powered load.

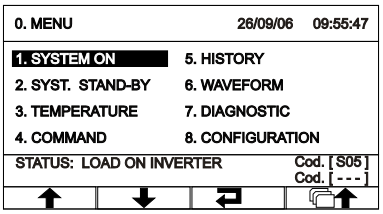

- **Closing the output switch SWOUT**

- Open the input switch (SWIN) and wait a few seconds. Verify that the UPS is set to battery operation and that the load is still being properly powered. You should hear a beep every 7 sec.

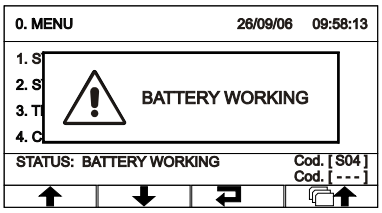

- Close the input switch (SWIN) and wait a few seconds. Verify that the UPS is no longer in battery operation and that the load is being properly powered from the inverter.

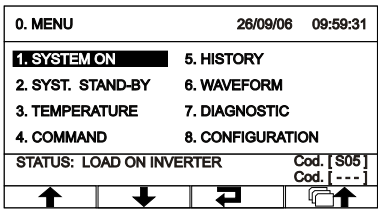

- To set the Date and Hour, access menu 8.6.7 (see "Display menu") from the main menu. Use the arrow keys (↑↓) to set the desired value and, finally, press the confirm key (↵) to move to the next field. To save the new settings, return to the previous menu by pressing the key.

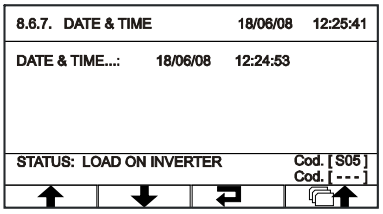

SWITCHING ON FROM THE MAINS

- Close the SWIN and SWBYP input switches (if present) and leave the SWMB manual bypass switch open. After a few seconds, the UPS will switch on and the "Stand-by / alarm" LED will flash: the UPS is now in stand-by status.
- Press ↵ to access the start menu. When asked to confirm, select “YES” and press ↵ again to confirm. All the LEDs around the display will light up for about 1 sec. and a beep will be emitted. The start sequence is completed when the UPS is set to status with the inverter-powered load.

SWITCHING ON FROM THE BATTERY

- Ensure that the external UPS battery line switch/fuses are closed
- Keep the "Cold Start" (located behind the door) key pressed for about 5 sec. The UPS will switch on and the display will turn on.
- Press ↵ to access the start menu. When asked to confirm, select “YES” and press ↵ again to confirm. All the LEDs around the display will light up for about 1 sec. and the buzzer will begin to emit a beep every 7 sec. The start sequence is completed when the UPS is set to battery operation status.

Note: if the sequence described above is not performed within 1 min., the UPS will shut itself off to avoid unnecessary running down the battery

SHUTDOWN

From the main menu, select the item “SHUTDOWN” and press ↵ to access the sub-menu. Then select the “YES - CONFIRM” option and press ↵ . The UPS will be set to stand-by status and the load will no longer be powered. To completely switch off the UPS, open the SWIN and SWBYP input switches (if present), wait a few seconds while the display turns off and, finally, open the external UPS battery line switch/fuses.

GRAPHIC DISPLAY

At the centre of the control panel is a wide graphic display for a constant detailed, real-time overview of UPS status. The first page is a schematic view of UPS operating status:

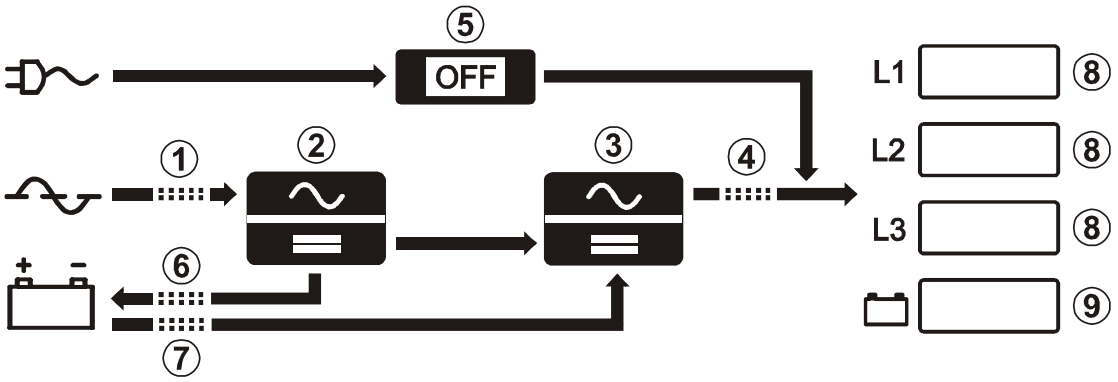

1. Input Line
2. PFC Converter
3. Inverter
4. Inverter Output Line
5. Automatic Static Bypass
6. Battery Charger Line
7. Battery Line
8. % Load
9. % Battery Charge

The diagram shows the status of the three power logical modules (PFC Converter, Inverter, Automatic Static Bypass).
Each module can take on one of the following status types:

OFF Module Off

Module on in normal operating mode

Module alarm or block

The following symbols show the power flow to and from the batteries (uncharged/charged) and the status of input and inverter contacts:

Module Off

Module on in normal operating mode

In addition, the user can switch the UPS on/Off directly from the control panel, consult network, output, battery measurements, etc.[1] and make the main machine settings.
The display is sub-divided into four main zones, each with its own specific role.

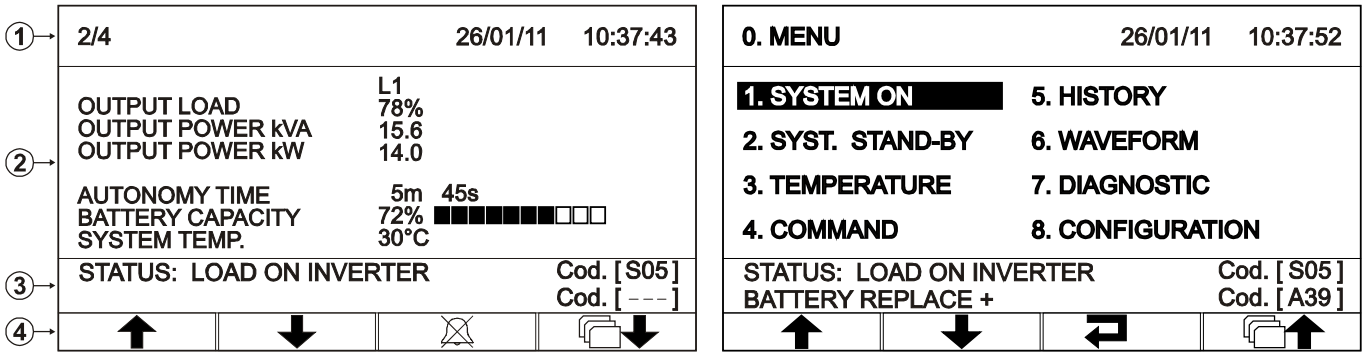

Graphic display sample screens
(screens for demonstration purposes; situations depicted may differ from reality)

1	**GENERAL INFORMATION**	Part of the display where the set date and hour are permanently shown and, depending on the screen, the page number or title of the menu that is active in that moment.
2	**DATA VIEWING / MENU NAVIGATION**	Main part of the display reserved for viewing of UPS measurements (constantly updated in real time) as well as to the consultation of various menus that can be selected by the user by means of the related function keys. Once the desired menu has been selected, this part of the display will show one or more pages containing all data relative to the selected menu.
3	**UPS STATUS / ERRORS - FAULTS**	UPS operation status display area. The first row is always active and constantly displays UPS status in real time. The second is activated only in the presence of a UPS error and/or fault and shows the type of detected error/fault. A code corresponding to the event in progress is shown to the right of each row.
4	**KEYS FUNCTION**	Area divided into four boxes, each relative to the underlying function key. Depending on the menu that is active in that moment, the display shows the function of the corresponding key in the related box.

Key symbols

	To enter into the main menu
	To return to the previous menu or display
	To scroll the various selectable items inside a menu or to pass from one page to another during data display
	To confirm selection
	To temporarily silence the buzzer (keep press for at least 0.5 sec.). To cancel a programmed start-up/shutdown(keep press for at least 2 sec.).

[1] *The accuracy of the measurements is: 1% for voltage measurements, 3% for current measurements,0.1% for frequency measurements. The indication of remaining battery time is an ESTIMATE, and is not to be considered an instrument of absolute measurement.*

DISPLAY MENU

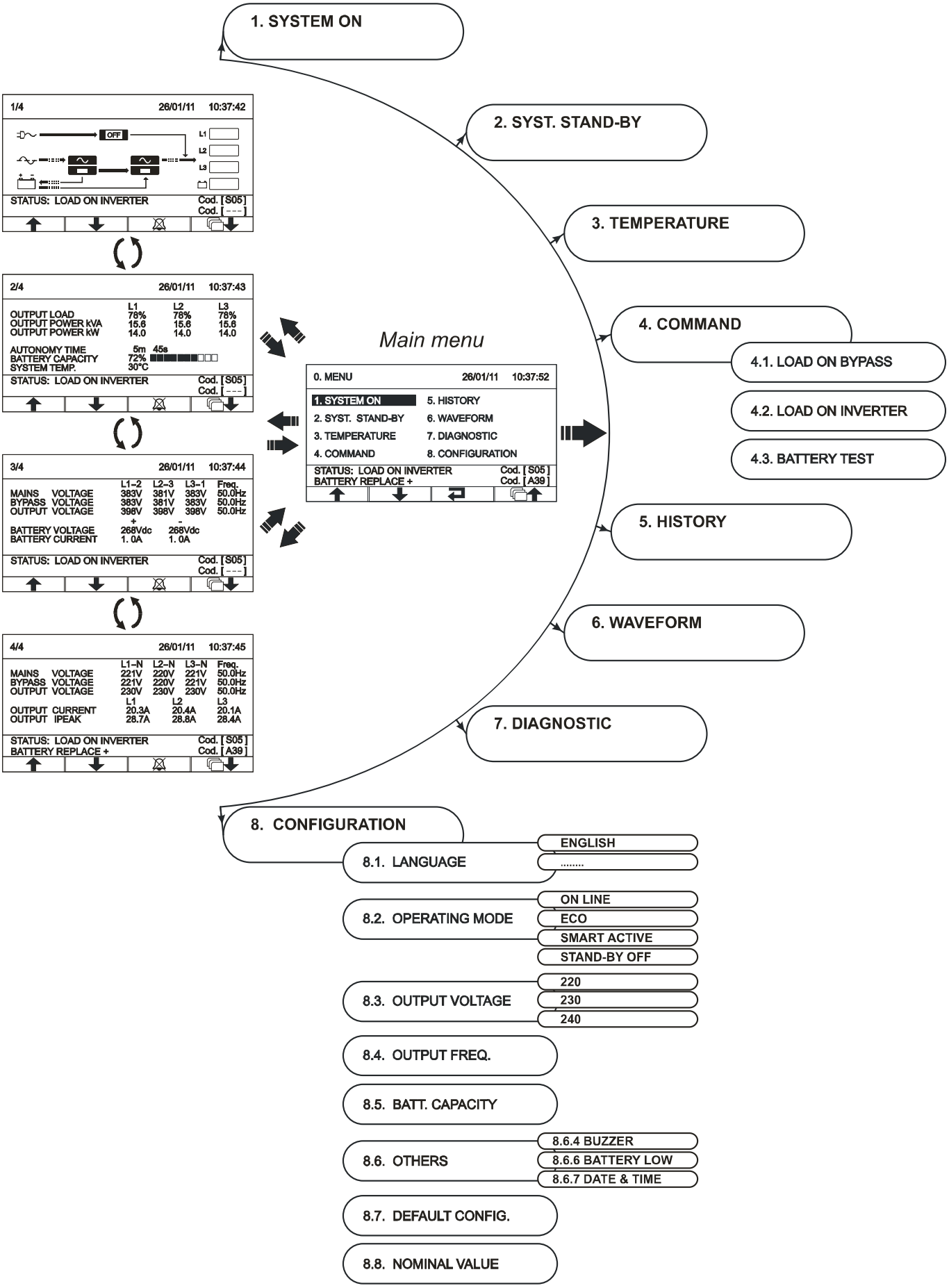

OPERATING MODE

The mode that ensures the most load protection is the ON LINE mode, where power for the load undergoes a couple conversion and is reconstructed at output in a perfectly sinusoidal way, with frequency and voltage fixed by the precise digital control of the DSP independently from the input (V.F.I.). *****
It is possible to select the following modes next to the traditional double conversion ON LINE operating mode:

- ECO (LINE INTERACTIVE)
- SMART (SMART ACTIVE)
- STBYOFF (STAND-BY OFF)

In order to optimise performance, the load is normally powered by the bypass in ECO mode (any disturbances presented on the mains can have repercussions on the load). In the case of no mains or simply output from expected tolerances, the UPS will transfer to normal double conversation ON LINE operation. Approximately 5 minutes after the mains tolerances are restored, the load is automatically switched over to bypass.

In the event that the user is not able to decide which operating mode is best for use (between ON LINE and ECO), he can entrust the choice to SMART ACTIVE mode. Based on statistics detected regarding power mains quality, the UPS decides on its own which mode to configure.

Finally, in STAND-BY OFF mode, operation is configured as back-up:
in the presence of mains, the load is not powered, during a black-out, the load is powered by an inverter by means of batteries, to then be switched off again upon mains return. Intervention time is less than 0.5 sec.

***** *Value rms of output voltage is fixed by the precise control of the DSP independently from input voltage, while the frequency of output voltage is synchronized (within a tolerance to be set by the user) with that of the input for bypass use. Outside of this tolerance, the UPS desynchronizes, bringing itself to the nominal frequency and bypass can no longer be used (free running mode).*

MANUAL BYPASS (SWMB)

ATTENTION: Contact a service centre should any malfunctions be detected. UPS maintenance can only be performed by skilled personnel who have been trained by the manufacturer.

ATTENTION: dangerous voltages even with the input, bypass, output and battery open switches can be present inside equipment.
Removal of UPS closing panels by unqualified personnel is dangerous and can cause harm to the operator, equipment and utilities connected to it.

Operations to be performed in order for setting the UPS in "Manual bypass" status without interrupting power to the load:

- Attention: if the UPS is in battery operation, manual bypass insertion may cut off power to the load.

  Close the SWMB manual bypass switch located behind the door: in this way, the input is short-circuited with the output.
- Open the SWIN input, SWBYP bypass (if present) and SWOUT output switches. Open the external UPS battery line switch/fuses. The control panel will switch off after a few seconds.
  In this operating mode, any disturbance or blackouts on the UPS power line will have repercussions on the powered equipment (the UPS is no longer active and the load is connected directly to the mains). **In addition, the auxiliary *"EnergyShare" (if present)* socket will no longer be powered (see paragraph "*Auxiliary sockets (optional)*").**

Operations to be performed to start up the UPS in "Manual bypass" status without cutting off power to the load: (<u>to be performed only when no faults or malfunctions have been detected</u>):

- Close the SWIN input, SWBYP bypass (if present) and SWOUT output and the external UPS battery line switches. The control panel will reactivate. Restart the UPS from the "SYSTEM ON" menu. Wait for the sequence to be completed.
- Open the SWMB manual bypass switch: the UPS will restart normal operation.

REDUNDANT AUXILIARY POWER ADAPTER FOR AUTOMATIC BYPASS

The UPS is equipped with a redundant auxiliary power adapter which permits operation on the automatic bypass even in the event of main auxiliary power faults. In the event of a UPS fault, which also can cause breakage of the main auxiliary power, the load remains powered by means of the automatic bypass.
ATTENTION: the multiprocessor board and control panel are not powered in this mode; therefore, the LEDs and displays are off.

In this emergency condition, any disturbances present on the input line have repercussions on the load.

POWER WALK-IN

The UPS is equipped with a Power Walk-In mode which can be activated and configured via configuration software. When this mode is enabled, once the mains power is restored (after a period of autonomy), the UPS begins absorbing from it again progressively so as not to threaten (due to the peak) for any generator group that may be installed upstream. The duration of the transition can be set from 0 to 125 seconds. The default value is 10 seconds (when this function is active). During the transition, the power required is drawn partly from the batteries and partly from the mains while maintaining sinusoidal absorption. The battery charger is switched back on only after the transition is complete

DERATING OF POWER FOR 200/208V NEUTRAL-PHASE LOADS

In the event in which output voltage is set at 200V or 208V NEUTRAL-PHASE, the maximum power that can be supplied by the UPS undergoes derating with respect to the nominal power, as demonstrated in the following graph:

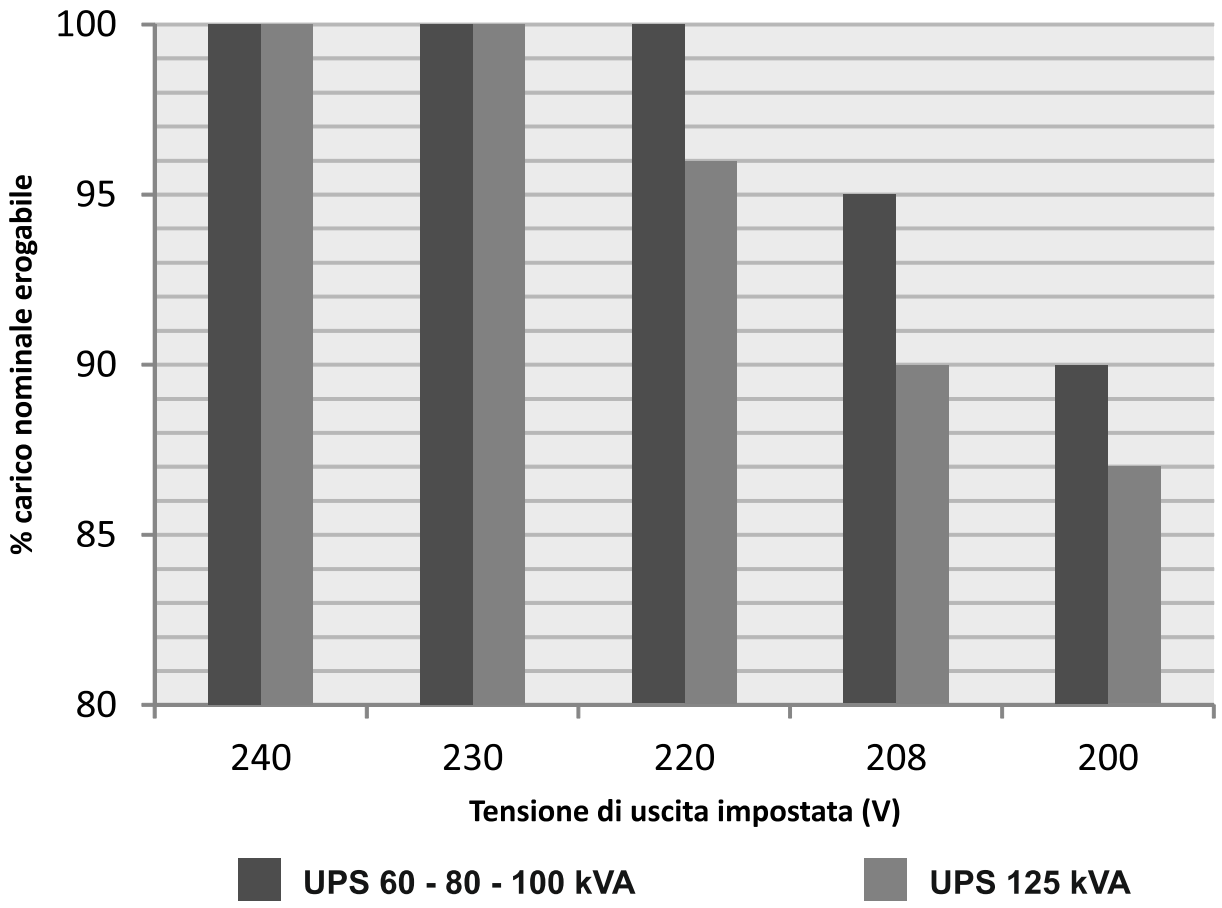

UPS CONFIGURATION

Configurations which can be modified by the user from the control panel are listed in the table below.

FUNCTION	DESCRIPTION	DEFAULT	POSSIBLE CONFIGURATIONS
Language*	Selects mimic panel language language	English	• English • Italian • German • French • Spanish • Polish • Russian • Chinese
Output voltage	Selects the rated output voltage (Phase - Neutral)	230V	• 220V • 230V • 240V
Buzzer	Selects the audible alarm operating mode	Reduced	• Normal • Reduced: does not sound due to the momentary intervention of the bypass
Operating mode**	Selects one of five different operating modes	ON LINE	• ON LINE • ECO • SMART ACTIVE • STAND-BY OFF
Battery low **	Estimated autonomy time remaining for “battery low” warning	3 min.	• 1 ÷ 7 @1 min step
Date and time**	UPS internal watch setup		

** Press keys F1 and F4 simultaneously for t > 2 sec. and English will automatically be reset.*
*** Function modification can be blocked by means of the configuration software.*

Configurations which can be modified by means of configuration software available at service centres are listed in the following table.

FUNCTION	DESCRIPTION	DEFAULT
Operating mode	Selects one of five different operating modes	ON LINE
Output voltage	Selects the rated output voltage (Phase - Neutral)	230V
Output nominal frequency	Selects the rated output frequency	50Hz
Autorestart	Waiting time for automatic power-on after the return of mains voltage	5 sec.
Auto power off	Automatic UPS power-off in battery operation mode if the charge is lower than 5%	Disabled
Buzzer Reduced	Selects the audible alarm operating mode	Reduced
EnergyShare off	Selects the auxiliary socket operating mode	Always connected
Timer	Programmed UPS power on/off (daily)	Disabled
Autonomy limitation	Maximum battery operation time	Disabled
Maximum load	Selects the user overload limit	Disabled

FUNCTION	DESCRIPTION	DEFAULT
Bypass Synchronization speed	Selects the synchronisation speed of the inverter to the bypass line	1 Hz/sec
External synchronization	Selects the source of synchronisation for the inverter output	From bypass line
External temperature	Activates reading of the external temperature probe	Disabled
Bypass mode	Selects the mode of use of the bypass line	Enabled / High sensitivity
Bypass active in stand-by	Load supply from bypass with UPS in stand-by	Disabled (load NOT supplied)
Bypass frequency tolerance	Selects the accepted range for the input frequency for switching to the bypass and for the synchronisation of the output	± 5%
Bypass min.-max. threshold	Selects the accepted voltage range for switching to the bypass	Low: 180V High: 264V
Eco mode sensibility	Selects the intervention sensitivity during operation in ECO mode	Normal
Eco mode min.-max. threshold	Selects the accepted voltage range for operation in ECO mode	Low: 200V High: 253V
UPS without battery	Operating mode without batteries (for converters or voltage stabilizers)	Operating with Batteries
Battery low time	Estimated autonomy time remaining for “battery low” warning	3 min.
Automatic battery test	Interval of time for the automatic battery test	40 ore
Parallel common battery	Common Battery for parallel UPS systems	Disabled
Internal battery capacity	Nominal Battery capacity for internal batteries	Change according with UPS model
External battery capacity	Nominal Battery capacity for external batteries	7Ah for UPS without internal batteries; 0Ah all other cases
Battery charging algorithm	Algorithm and Battery recharging threshold	Two levels
Battery recharging current	Recharging current compare to battery nominal capacity	12%

COMMUNICATION PORTS

The following communication ports are present on the upper part of the UPS behind the door (see "*Communications area view*"):

- Serial port, available with RS232 and USB connectors.
  NOTE: use of one connector automatically excludes the other
- Expansion slot for additional COMMUNICATION SLOT communication boards
- AS400 port

It is also possible to install an optional MultiCOM 382 contact board (4 programmable contacts, 250V AC, 3A) on the rear of the UPS

RS232 AND USB CONNECTORS

RS232 CONNECTOR

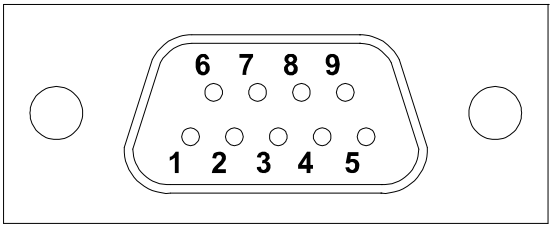

PIN #	NAME	TYPE	SIGNALS
1		IN	
2	TX	OUT	TX serial line
3	RX	IN	RX serial line
4			
5	GND	POWER	
6		OUT	
7			
8	+15V	POWER	Isolated power 15V±5% 80mA max
9	WKATX	OUT	ATX power adapter activator

USB CONNECTOR

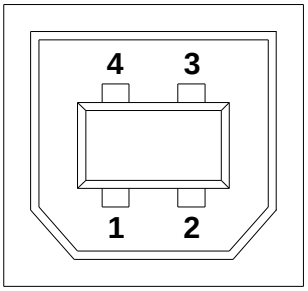

PIN #	SIGNALS
1	VBUS
2	D-
3	D+
4	GND

COMMUNICATION SLOT

The UPS is supplied with two expansion slots for optional communication cards that allow device dialogue using the main communication standards (see "*Communications area view*").
Some examples:

- Second RS232 port
- Serial duplicator
- Ethernet network card with TCP/IP, HTTP and SNMP protocols
- RS232 + RS485 ports with JBUS / MODBUS protocol

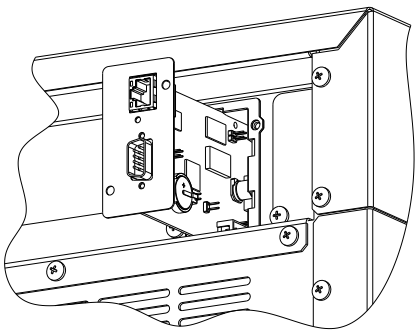

Refer to the website for further information regarding available accessories

AS400 PORT

AS400 PORT

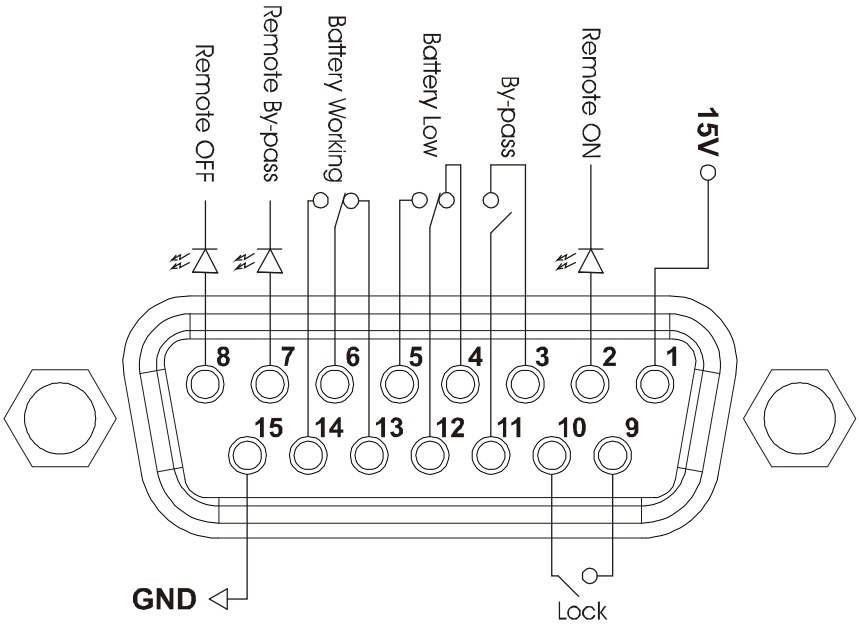

PIN #	NAME	TYPE	FUNCTION
1	15V	POWER	Isolated auxiliary power +15V±5% 80mA max
15	GND	POWER	Mass to which isolated power supplies (15V) and remote controls (Remote ON, Remote BYPASS, Remote OFF) are referred
2	REMOTE ON	INPUT #1	Connect pin 2 with pin 15 for at least 3 seconds to switch on the UPS
8	REMOTE OFF	INPUT #2	Connect pin 8 to pin 15 and the UPS will immediately switch off
7	REMOTE BYPASS	INPUT #3	Connect pin 7 to pin 15 and power will transfer from the inverter to the bypass. As long as the UPS is connected, bypass operation will remain, even if the input mains cut off. If the jumper is removed in the presence of power, the UPS will begin operation via the inverter. If the jumper is removed without power, the UPS will begin operation via batteries
4,5,12	BATTERY LOW	OUTPUT #1	Signals that batteries are low when contact 5/12 is closed (1)
6,13,14	BATTERY WORKING	OUTPUT #2	Signals that the UPS is operating via batteries when contact 6/14 is closed (1)
9,10	LOCK	OUTPUT #3	Signals that the UPS is locked when the contact is closed (1)
3,11	BYPASS	OUTPUT #4	Signals that load power is passed through the bypass when the contact is closed (1)

NOTE: The figure shows contacts present inside the UPS, able to carry a max current of 0.5A at 42Vdc.
The position of the contacts indicated in the figure is without an alarm or signal present.

(1) *Output can be programmed by means of special configuration software.*
The function shown is the default (factory setting).

ACOUSTIC SIGNAL (BUZZER)

UPS status and faults are signalled via a buzzer which emits a modulated sound depending on different UPS operating conditions. The different types of sounds are described below:

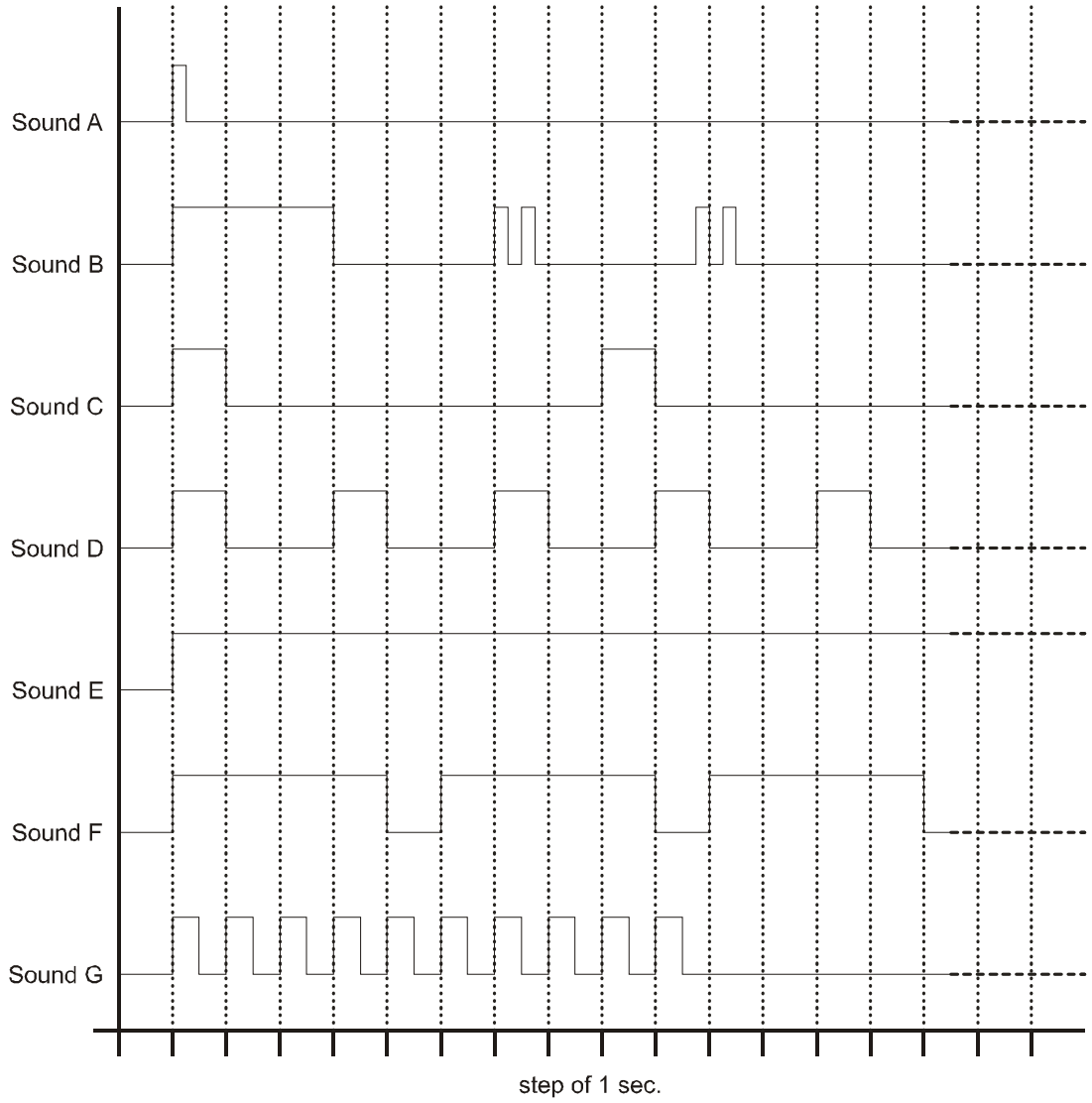

Sound A: This signal is emitted when the UPS is switched on or off using the appropriate buttons. A single beep confirms ON, battery test activation, the cancellation of programmed shutdown.

Sound B: This signal is emitted when the UPS switches to bypass to compensate for current surges due to the insertion of a distorted current.

Sound C: This signal is emitted when the UPS switches to battery operation before No Battery is signalled (sound D). It is possible to silence signals (see "Graphic display" paragraph).

Sound D: This signal is emitted when battery operation reaches No Battery alarm threshold. It is possible to silence signals (see "Graphic display" paragraph).

Sound E: This signal is emitted when an alarm or lock is detected.

Sound F: This signal is emitted when a fault is detected: battery overvoltage.

Sound G: This type of signal is emitted when the battery test fails. The buzzer beeps ten times. This alarm signal is emitted while the "replace batteries" LED is on.

SOFTWARE

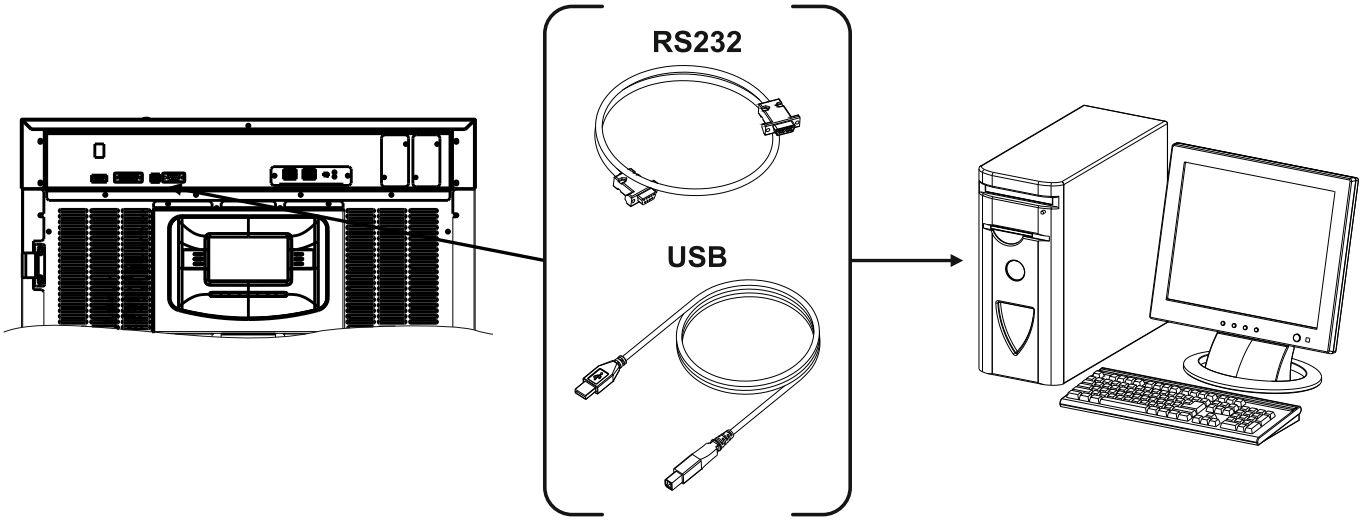

MONITORING AND CONTROL SOFTWARE

PowerShield^3 software guarantees effective, intuitive UPS management, displaying all the most essential information such as input voltage, applied load and battery capacity.
It is also able to perform shutdown operations and send e-mails, text messages and network messages automatically when certain events, selected by the user, occur.

Notes for installation:

- Download PowerShield^3 software from**www.riello-ups.com**, selecting the desired operating system.
- Connect the UPS RS232 communication port to a PC COM communication port by means of the supplied serial cable* or connect the UPS USB port to a PC USB port via a standard USB cable*.
- Follow the installation program instructions.

For further information regarding installation and user, consult the software manual which can be downloaded at **www.riello-ups.com**.

CONFIGURATION SOFTWARE

It is possible to access the most important UPS parameter configuration by means of special software.
For a list of possible configurations, refer to paragraph ***UPS configuration***.

***** *It is advisable to use a cable with length max. 3 metres*

TROUBLESHOOTING

Irregular UPS operation is most likely not an indication of a fault but due to simple problems or distraction.
It is therefore advisable to consult the table below carefully as it summarises information which is useful for solving the most common problems.

ATTENTION: *the table below often cites use of MANUAL BYPASS. Please remember that, before resetting proper UPS operation, it is necessary to verify that the UPS is* ***not in STAND-BY****.*
If it is, switch on the UPS by accessing the "SYSTEM ON" menu and wait for the start-up sequence to be completed before removing manual bypass.
For further information, ***carefully read the sequence described in paragraph "Manual bypass (SWMB)****".*

NOTE: For the exact meaning of the codes mentioned in the table, refer to paragraph "ALARM CODES"

PROBLEM	POSSIBLE CAUSE	SOLUTION
IN THE PRESENCE OF MAINS POWER, THE UPS DOES NOT GO INTO STAND-BY (THE RED LOCK/STAND-BY LED DOES NOT FLASH, NO BEEP IS EMITTED AND THE DISPLAY DOES NOT SWITCH ON)	NO CONNECTION TO INPUT TERMINALS	Connect the mains to the terminals as indicated in the Installation paragraph
	NO CONNECTION TO THE NEUTRAL	The UPS cannot operate without neutral connection. ATTENTION: Failure to make this connection can damage the UPS and/or the load. Connect the mains to the terminals as indicated in the Installation paragraph.
	THE SWITCH BEHIND THE DOOR (SWIN) IS OPEN	Close the switch.
	NO MAINS VOLTAGE (BLACKOUT)	Verify electrical main voltage presence. If necessary, switch on via batteries to power the load.
	UPSTREAM PROTECTION INTERVENTION	Reset protection. Attention: check that there is no output overload or short to the UPS.
NO LOAD VOLTAGE ARRIVING	NO CONNECTION TO OUTPUT TERMINALS	Connect load to terminals
	THE SWITCH BEHIND THE DOOR (SWOUT) IS OPEN	Close the switch.
	THE UPS IS IN STAND-BY MODE	Perform start-up sequence
	STAND-BY OFF MODE IS SELECTED	It is necessary to change mode. In reality, the STAND-BY OFF (emergency power supply) mode only powers loads in the event of a blackout.
	UPS MALFUNCTION AND AUTOMATIC BYPASS NOT WORKING	Insert manual bypass (SWMB) and contact the nearest service centre
THE UPS IS OPERATING FROM THE BATTERY DESPITE THE PRESENCE OF MAINS VOLTAGE	UPSTREAM PROTECTION INTERVENTION	Reset protection. ATTENTION: Check that there is no output overload or short to the UPS.
	THE INPUT VOLTAGE IS OUTSIDE THE PERMITTED TOLERANCE RANGE FOR MAINS OPERATION	Problem with the mains. Wait until the input mains voltage returns within the tolerance range. The UPS will automatically return to mains operation.

PROBLEM	POSSIBLE CAUSE	SOLUTION
THE DISPLAY SHOWS C01	NO JUMPER ON R.E.P.O. CONNECTOR (SEE "COMMUNICATIONS AREA VIEW") OR JUMPER NOT INSERTED PROPERLY	Connect or properly insert jumper. If present, verify that the optional emergency contact complies with information detailed in the R.E.P.O. paragraph
THE DISPLAY SHOWS C05	MANUAL BYPASS SWITCH (SWMB) CLOSED	If the switch (SWMB) located behind the door was not closed intentionally, open it
	NO JUMPER ON TERMINALS FOR REMOTE MAINTENANCE BYPASS (A3-A4, "UPS CONNECTIONS VIEW")	Insert the jumper or, if an additional auxiliary contact is present, follow directions described in paragraph "Remote Maintenance Bypass"
THE DISPLAY SHOWS ONE OR MORE OF THE FOLLOWING CODES: A30, A32, A33, A34 THE UPS WILL NOT START UP	AMBIENT TEMPERATURE < 0°C	Heat up the room, wait for dissipater temperature to exceed 0°C and start up the UPS
	TEMPERATURE SENSOR MALFUNCTION ON DISSIPATOR	Activate manual bypass (SWMB), switch off the UPS, re-start the UPS and exclude manual bypass. Call the nearest service centre if this problem persists.
THE DISPLAY SHOWS ONE OR MORE OF THE FOLLOWING CODES: F09, F10	UPS INPUT STAGE MALFUNCTION	Activate manual bypass (SWMB), switch off and re-start the UPS. Exclude manual bypass Contact the nearest service centre if this problem persists
	PHASE 1 PRESENTS VOLTAGE MUCH LOWER THAN THE OTHER TWO PHASES.	Open the SWIN, switch on batteries, wait for sequence completion and close the SWIN
THE DISPLAY SHOWS ONE OR MORE OF THE FOLLOWING CODES: F11, F14, F15, F16, F17, L06, L07, L08, L09, L14, L15, L16, L17, L18, L19, L20, L21, L22	INSERTION OF ABNORMAL LOADS	Remove load. Insert manual bypass (SWMB), switch off and re-start the UPS. Exclude manual bypass Call the nearest service centre if this problem persists.
	UPS INPUT OR OUTPUT STAGE MALFUNCTION	Activate manual bypass (SWMB), switch off and re-start the UPS. Exclude manual bypass Contact the nearest service centre if this problem persists
THE DISPLAY SHOWS ONE OR MORE OF THE FOLLOWING CODES: F03, F04, F05, A08, A09, A10	NO CONNECTION ON ONE OR MORE PHASES	Verify terminal connections
	FUSES BROKEN INSIDE PROTECTIONS ON PHASES OR INPUT CONTACTOR	Call the nearest service centre
THE DISPLAY SHOWS ONE OR MORE OF THE FOLLOWING CODES: F42, F43, F44, L42, L43, L44	FUSES BROKEN INSIDE PROTECTIONS ON BATTERIES	Call the nearest service centre

PROBLEM	POSSIBLE CAUSE	SOLUTION
THE DISPLAY SHOWS ONE OR MORE OF THE FOLLOWING CODES: A13, A14, A15	BYPASS LINE UPSTREAM PROTECTION OPEN (WITH SEPARATE BYPASS ONLY)	Reset upstream protection. ATTENTION: check that there is no output overload or short circuit to the UPS.
	BYPASS SWITCH OPEN (SWBYP WITH SEPARATE BYPASS ONLY)	Close switch located behind the door.
THE DISPLAY SHOWS ONE OR MORE OF THE FOLLOWING CODES: F19, F20	BATTERY CHARGER MALFUNCTION	Insert manual bypass (SWMB), completely switch off the UPS, open the switch/fuses on the external UPS battery line. Restart the UPS and contact the nearest service centre if this problem persists.
THE DISPLAY SHOWS ONE OR MORE OF THE FOLLOWING CODES: A26, A27	BATTERY FUSES INTERRUPTED OR SWITCHES/FUSES OPEN	Replace fuses or close the external UPS battery line switch/fuses. ATTENTION: if necessary, replace fuses with other of the same type (see "Battery line")
THE DISPLAY SHOWS CODE S07	THE BATTERIES ARE FLAT; THE UPS IS WAITING FOR THE BATTERY VOLTAGE TO EXCEED THE SET THRESHOLD	Wait until the batteries have recharged or force power-on manually via the “ON” menu.
THE DISPLAY SHOWS ONE OR MORE OF THE FOLLOWING CODES: F06, F07, F08	INPUT CONTACTOR BLOCKED	Activate manual bypass (SWMB), switch off the UPS, open the SWIN and contact the nearest service centre (Attention: once the SWIN is open, it will no longer be possible to close it again before Service intervenes).
THE DISPLAY SHOWS ONE OR MORE OF THE FOLLOWING CODES: L01, L10, L38, L39, L40, L41	MALFUNCTION: ▪ OF THE TEMPERATURE SENSOR OR UPS COOLING SYSTEM ▪ MAIN AUXILIARY POWER ▪ STATIC BYPASS SWITCH	Activate manual bypass (SWMB), switch off and re-start the UPS. Exclude manual bypass Contact the nearest service centre if this problem persists
THE DISPLAY SHOWS ONE OR MORE OF THE FOLLOWING CODES: A22, A23, A24, F23, L23, L24, L25	THE LOAD APPLIED TO THE UPS IS TOO HIGH	Reduce the load to within the threshold of 100% (or user threshold in the case of code A22,A23,A24).
THE DISPLAY SHOWS ONE OR MORE OF THE FOLLOWING CODES: L26, L27, L28	SHORT-CIRCUIT IN OUTPUT	Switch off the UPS. Disconnect all utilities related to the short-circuited phase. Switch the UPS back on. Reconnect utilities once the fault has been identified.

PROBLEM	POSSIBLE CAUSE	SOLUTION
THE DISPLAY SHOWS ONE OR MORE OF THE FOLLOWING CODES: A39, A40 AND THE RED "REPLACE BATTERIES" LED IS ON	BATTERIES HAVE NOT PASSED THEIR PERIODIC EFFICIENCY TEST	It is advisable to replace UPS batteries since they are no longer able to maintain load for a sufficient autonomy. **<u>Attention</u>: Battery replacement must be performed by qualified personnel**
THE DISPLAY SHOWS ONE OR MORE OF THE FOLLOWING CODES: F34, F35, F36, L34, L35, L36	▪ AMBIENT TEMPERATURE EXCEEDING 40°C ▪ SOURCES OF HEAT NEAR THE UPS ▪ VENTILATION SLITS OBSTRUCTED OR TOO CLOSE TO WALLS	Activate manual bypass (SWMB) without switching off the UPS. In this way, the fans can cool the dissipator more quickly. Remove the cause of over-temperature and wait for dissipator temperature to lower. Exclude manual bypass.
	TEMPERATURE SENSOR OR UPS COOLING SYSTEM MALFUNCTION	Insert manual bypass (SWMB) without switching off the UPS so that fans can cool the dissipator more quickly. Wait for dissipator temperature to lower. Switch off and then re-start the UPS. Exclude manual bypass. Contact the nearest service centre if this problem persists
THE DISPLAY SHOWS ONE OR MORE OF THE FOLLOWING CODES: F37, L37	▪ AMBIENT TEMPERATURE EXCEEDING 40°C ▪ SOURCES OF HEAT NEAR THE UPS ▪ VENTILATION SLITS OBSTRUCTED OR TOO CLOSE TO WALLS ▪ TEMPERATURE SENSOR OR BATTERY CHARGER COOLING SYSTEM MALFUNCTION	Remove the cause of over-temperature. Insert manual bypass (SWMB) without switching off the UPS and wait for battery charger temperature to lower. Exclude manual bypass. Contact the nearest service centre if this problem persists
THE DISPLAY SHOWS ONE OR MORE OF THE FOLLOWING CODES: L11, L12, L13	STATIC BYPASS BREAKAGE OR MALFUNCTION	Activate manual bypass (SWMB). Switch off the UPS, wait one minute and then re-start the UPS. Exclude manual bypass. Contact the nearest service centre if this problem persists
THE DISPLAY IS BLANK OR GIVES INCORRECT INFORMATION	THE DISPLAY IS HAVING POWER PROBLEMS	Close Manual Bypass (SWMB) keeping closed INPUT and OUTPUT switches. Open input switch (SWIN and SWBYP) and wait until UPS is completely turned OFF. Turn ON SWIN and SWBYP again and verify display regular operation. Exclude the maintenance bypass. If the fault persists, contact the nearest technical support centre.
THE DISPLAY IS OFF, FANS ARE OFF BUT THE LOAD IS POWERED	AUXILIARY POWER MALFUNCTION. THE UPS IS IN BYPASS SUPPORTED BY A REDUNDANT POWER ADAPTER.	Activate manual bypass (SWMB). Switch off the UPS, wait one minute and then re-start the UPS. If the display does not switch back on or the sequence fails, contact the nearest service centre leaving the UPS in manual bypass.

STATUS / ALARM CODES

Using a sophisticated self-diagnosis system, the UPS is able to check and signal its own status and any anomalies or faults which may occur during normal operation. If there is a problem, the UPS signals the event by showing the code and the type of active alarm on the display.

- **STATUS:** indicates current UPS status.

CODE	DESCRIPTION
S01	Pre-loading in progress
S02	Load not powered (stand-by status)
S03	Start-up phase
S04	Load powered by bypass line
S05	Load powered by inverter
S06	Battery operating mode
S07	Waiting for battery charging
S08	Economy mode on
S09	Ready for start-up
S10	UPS locked – load not powered
S11	UPS locked – load on bypass
S12	BOOST stage or battery charger locked – load not powered
S13	Frequency converter - load powered by inverter

- **COMMAND:** indicates presence of an active command.

CODE	DESCRIPTION
C01	Remote power-off command
C02	Remote load command on bypass
C03	Remote power-on command
C04	Battery test in progress
C05	Manual bypass command
C06	Emergency power-off command
C07	Remote battery charger power-off command
C08	Load command on bypass

- **WARNING:** these messages relate to a special UPS configuration or operation.

CODE	DESCRIPTION
W01	Low battery warning
W02	Programmed shutdown on
W03	Programmed shutdown imminent
W04	Bypass disabled
W05	Synchronization disabled (UPS in Free running)

- **ANOMALY:** these are “minor” problems which reduce UPS performance or prevent certain functions from being used.

CODE	DESCRIPTION
A03	Inverter not synchronized
A04	External synchronization failed
A05	Overvoltage on Phase1 input line
A06	Overvoltage on Phase2 input line
A07	Overvoltage on Phase3 input line
A08	Undervoltage on Phase1 input line
A09	Undervoltage on Phase2 input line
A10	Undervoltage on Phase3 input line
A11	Input frequency out of tolerance range
A13	Voltage on Phase1 bypass line out of tolerance range
A14	Voltage on Phase2 bypass line out of tolerance range
A15	Voltage on Phase3 bypass line out of tolerance range
A16	Bypass frequency out of tolerance range
A18	Voltage on bypass line out of tolerance range
A19	Elevated current peak on Phase1 output
A20	Elevated current peak on Phase2 output
A21	Elevated current peak on Phase3 output
A22	Load on Phase1 > set user threshold
A23	Load on Phase2 > set user threshold
A24	Load on Phase3 > set user threshold
A25	Output switch open
A26	Positive battery branch absent or battery fuses open
A27	Negative battery branch absent or battery fuses open
A29	System temperature sensor fault
A30	System temperature < 0°C
A31	System overtemperature
A32	Phase1 dissipator temperature < 0°C
A33	Phase2 dissipator temperature < 0°C
A34	Phase3 dissipator temperature < 0°C
A35	Internal batteries temperature sensor fault
A36	Internal batteries overtemperature
A37	External batteries temperature sensor fault
A38	External batteries overtemperature
A39	Positive batteries branch to be replaced
A40	Negative batteries branch to be replaced
A41	QN switch open
// **A47**	Different firmware version

// = Parallel Anomaly

- **FAULT:** these are more critical problems than the "Anomaly" faults because, if they persist, they could cause the UPS to lock within a very short time.

CODE	DESCRIPTION
F01	Internal communication error
F02	Incorrect input phase cycle direction
F03	Phase1 input fuse broken or input contactor locked (does not close)
F04	Phase2 input fuse broken or input contactor locked (does not close)
F05	Phase3 input fuse broken or input contactor locked (does not close)
F06	Phase1 input contactor locked (does not open)
F07	Phase2 input contactor locked (does not open)
F08	Phase4 input contactor locked (does not open)
F09	Positive branch capacitor pre-charge failed
F10	Negative branch capacitor pre-charge failed
F11	BOOST stage fault
F12	Incorrect bypass phase cycle direction
F14	Phase1 sinusoid inverter deformed
F15	Phase2 sinusoid inverter deformed
F16	Phase3 sinusoid inverter deformed
F17	Inverter stage fault
F19	Positive battery overvoltage
F20	Negative battery overvoltage
F21	Positive battery undervoltage
F22	Negative battery undervoltage
F23	Output overload
F26	Phase1 output contactor locked (does not open)
F27	Phase2 output contactor locked (does not open)
F28	Phase3 output contactor locked (does not open)
F29	Phase1 output fuse broken or output contactor locked (does not close)
F30	Phase2 output fuse broken or output contactor locked (does not close)
F31	Phase3 output fuse broken or output contactor locked (does not close)
F32	Battery charger stage fault
F33	Battery charger output fuse broken
F34	Dissipator overtemperature
F37	Battery charger overtemperature
F42	BOOST 1 battery fuse broken
F43	BOOST 2 battery fuse broken
F44	BOOST 3 battery fuse broken
// **F45**	Parallel communication bus open (1 point)
// **F46**	Parallel bypass request signal fault
// **F47**	Parallel synchronization signal fault

// = Parallel Fault

- **LOCK:** Indicates an inhibit of the UPS or a component caused by a failure. A lock is normally preceded by an alarm. In the event of a fault and consequential inverter lock, the inverter will switch off and power to the load via the bypass line (this procedure is excluded for locks caused by serious and persistent overloads and for those caused by a short circuit).

CODE	DESCRIPTION
L01	Incorrect auxiliary power supply
L02	Disconnection of one or more internal cables
L03	Phase1 input fuse broken or input contactor locked (does not close)
L04	Phase2 input fuse broken or input contactor locked (does not close)
L05	Phase3 input fuse broken or input contactor locked (does not close)
L06	Positive BOOST stage overvoltage
L07	Negative BOOST stage overvoltage
L08	Positive BOOST stage undervoltage
L09	Negative BOOST stage undervoltage
L10	Static bypass switch fault
L11	L1 bypass output locked
L12	L2 bypass output locked
L13	L3 bypass output locked
L14	Phase1 inverter overvoltage
L15	Phase2 inverter overvoltage
L16	Phase3 inverter overvoltage
L17	Phase1 inverter undervoltage
L18	Phase2 inverter undervoltage
L19	Phase3 inverter undervoltage
L20	Continuous voltage on inverter output or Phase1 sinusoid inverter deformed
L21	Continuous voltage on inverter output or Phase2 sinusoid inverter deformed
L22	Continuous voltage on inverter output or Phase3 sinusoid inverter deformed
L23	Phase1 output overload
L24	Phase2 output overload
L25	Phase3 output overload
L26	Phase1 output short-circuit
L27	Phase2 output short-circuit
L28	Phase3 output short-circuit
L29	Phase1 output fuse broken or output contactor locked (does not close)
// **L32**	Parallel synchronization error
// **L33**	Parallel synchronization signal fault
L30	Phase2 output fuse broken or output contactor locked (does not close)
L31	Phase3 output fuse broken or output contactor locked (does not close)
L34	Phase1 dissipator overtemperature
L35	Phase2 dissipator overtemperature
L36	Phase3 dissipator overtemperature
L37	Battery charger overtemperature
L38	Phase1 dissipator temperature sensor fault
L39	Phase2 dissipator temperature sensor fault
L40	Phase3 dissipator temperature sensor fault
L41	Battery charger temperature sensor fault
L42	BOOST 1 battery fuse broken
L43	BOOST 2 battery fuse broken
L44	BOOST 3 battery fuse broken
// **L45**	Parallel bus separation
// **L46**	Parallel communication fault
// **L47**	Parallel board fault
// **L48**	Remote unit lock

// = Parallel Lock

TECHNICAL DATA

UPS Models	MST 60	MST 80	MST 100	MST 125
INPUT STAGE				
Nominal Voltage	380-400-415 V AC Three-phase with neutral (4 wire)			
Nominal Frequency	50-60Hz			
Maximum input current (1)	96A	125A	155A	211A
Maximum battery current	150A	200A	250A	300A
Input voltage tolerance accepted for no battery intervention (referred to 400V AC)	± 20% @ 100% load -40% +20% @50% load			
Input frequency tolerance accepted for no battery intervention (referred to 50/60Hz)	± 20% 40-72Hz			
Input current Harmonic Distortion	THDi = 2.5% (2)			THDi ≤ 2,5% (2)
Input power factor	≥ 0.99			
Power Walk In mode	Programmable from 1 to 125 sec. at steps of 1 sec			
OUTPUT STAGE				
Nominal Voltage (3)	380/400/415 V AC three-phase with neutral (4 wire)			
Nominal Frequency (4)	50/60Hz			
Output nominal current	87A	116A	145A	181A
Nominal apparent power in output	60kVA	80kVA	100kVA	125kVA
Nominal active power in output	54kW	72kW	90kW	112.5kW
Output power factor	0.9			
Short-circuit current	1.5 x In for t > 500ms			up to a 2,7 x In
Output voltage precision (referred to output voltage 400V AC)	± 1%			
Static stability (5)	± 0.5%			
Dynamic stability	± 3% resistive load (6)			
Output voltage harmonic distortion with linear load and normalized distortion	≤ 1% with linear load ≤ 3% with distorted load	≤ 1% with linear load ≤ 3% with distorted load	≤ 1% with linear load ≤ 3,5% with distorted load	≤ 1% with linear load ≤ 3% with distorted load
Crest factor accepted at nominal load	3:1			
Frequency accuracy in free running mode	0.01%			
Inverter overload (Vin>345V AC)	103% Infinite, 110% 10 min, 125% 1 min			
Bypass Overload	110% Infinite,125% 60 minutes, 150% 10 minutes			
BATTERY CHARGE STAGE				
Nominal voltage	±240Vdc			
Maximum recharging current (7)	10A (20A optional)			25A

UPS Models	MST 60	MST 80	MST 100	MST 125
MODE AND EFFICIENCY				
Operating mode	True on line double conversion Eco mode Smart Active mode Stand By Off (Emergency power supply) Frequency Converter			
AC/DC yield in Eco mode	> 99%			
OTHER				
Noise level with typical load	≤ 63dB(A)			
Casing degree of protection	IP20			
Ambient temperature [8]	0 - 40 °C			
Colour	RAL 7016			

(1) *Maximum input current in conditions: nominal load (PF=0.9), 380V input voltage and batteries charging with 10A*

(2) *@ 100% load & THDv ≤ 1%*

(3) *To maintain output voltage within the specified accuracy range, recalibration may be necessary after a long period of operation*

(4) *If network frequency is within ± 5% of the selected value, the UPS is synchronized with the network. If frequency is out of the range of tolerance or in battery operation, the frequency is the one selected ±0.01%*

(5) *Mains/Battery @ load 0% -100%*

(6) *@ Mains / battery / network @ resistive load 0% / 100% / 0%*

(7) *Recharging current is automatically regulated on the basis of installed battery capacity*

(8) *20 – 25 °C for longer battery life*

www.riello-ups.com

RPS SpA – *Riello Power Solutions*
Viale Europa, 7
37045 Legnago (VR)
Italy

0MNMSTK60RU5LUF