User Manual

NextEnergy NXE 250 - 300 kVA

RIELLO ELETTRONICA riello ups

NXE 250 - 300 kVA THREE-PHASE

Single unit and parallel system with distributed bypass

RPS SpA

Viale Europa, 7

37045 Legnago (VR) Italy

www.riello-ups.com

Symbols used in the manual

In this manual, some operations are highlighted by graphic symbols to alert the reader to the dangerous nature of the operations:

	DANGER	This symbol indicates the possibility of serious injury to the person and / or substantial damage to the unit if the indicated instructions are not followed
	WARNING	This symbol indicates an important piece of information that must be read and followed carefully.
	READING	This symbol indicates an important piece of information and/or procedures that are recommended to be read carefully.

Protective equipment to be worm

No maintenance operations must be carried out on the device without wearing the Personal Protective Equipment (PPE) described below

Personnel involved in the installation or maintenance of the equipment must not wear clothes with wide sleeves or laces, belts, bracelets or other items that may be dangerous, especially if they are metallic. Long hairs must be tied in such a way as to ensure that they are not a hazard.

The following symbols show the protective equipment that should be worn. The various items of PPE must be selected and sized according to the nature of the hazard (particularly electrical) posed by the equipment.

	Protective footwear Use: always		**Protective eyewear** Use: always
	Protective clothing Use: always		**Helmet** Use: when overhead structured are present
	Work gloves Use: always		

Definition of “operator” and “specialised technician”

The professional figure responsible for accessing the equipment for ordinary maintenance purposes is defined by the term ***operator***.
This definition covers personnel that know the operating and maintenance procedures for the equipment, and that have been:

1. trained to operate in accordance with the safety standards relating to the dangers that may arise where electrical voltage is present;
2. trained to use Personal Protective Equipment and to carry out basic first aid.
3.

The professional figure responsible for the installation and start-up of the equipment, and for any extraordinary maintenance, is defined by the term ***specialised technician***.
This definition covers personnel that, in addition to the requirements listed above for a general operator, must also:

1. have been suitably trained by the manufacturers or their representatives.
2. be aware of installation, assembly, repair and service procedures, and have a specific technical qualification.
3. have a background of technical training, or specific training relating to the procedures for the safe use and maintenance of the equipment.

Emergency Interventions

The following information is of a general nature.

First aid interventions

First aid interventions
Company regulations and traditional procedures should be followed for any first aid intervention that may be required.

Firefighting measures
Do not use water in case of fire, but only fire extinguishers that are suitable for use with electrical and electronic equipment.
If exposed to heat or fire, some products may release toxic fumes into the atmosphere. Always use a respirator when extinguishing a fire.

General Precautions

This manual contains detailed instructions for the use, installation and start-up of “NXE”.
Read the manual carefully before installation. The manual should be kept at hand and be consulted before carrying out any operation on the device.
With the Unit, along with this manual, it is also supplied with:

- The **“Safety and Compliance Manual”.**
- The installation manual **“Installation drawings**" providing useful information for connecting and installing the equipment.
- The **“Display Manual”** containing all of the information for monitoring the unit and for managing the display-programmable functions.

Read the manuals carefully before installation and commissioning.

This device has been designed and manufactured in accordance with the standards for the product, for normal use and for all uses that may reasonably be expected. It may under no circumstances be used for any purposes other than those expected, or in any other ways than those described in this manual. Any interventions should be carried out in accordance with the criteria and the time-frames described in this manual.

Safety Precautions

CAUTION: Dangerous voltage can also be present inside the equipment even with the input, bypass, output and battery switches open.
Removing the UPS enclosure by unauthorised personnel is a source of danger and may cause serious injuries to the operator.

Read the **"Safety and Compliance Manual".**

Enviromental Protection

In the development of its products, the company allocates abundant resources to analyse the environmental issues. All our products pursue the objectives defined in the environmental management system developed by the company in compliance with applicable standards.
No hazardous materials such as CFCs, HCFCs or asbestos are used in this product.
When evaluating packaging, the choice of recyclable materials has been preferred.
For correct disposal, please separate and identify the type of material of which the packaging is made in the table below. Dispose of all material in compliance with applicable standards in the country in which the product is used

DESCRIPTION	***ELEMENT***	
Pallet	Wood (FOR)	50 FOR
Package box	Corrugated cardboard (PAP)	20 PAP
Protective bag	High density polyethylene (PE-HD)	02 PE-HD
Bubble wrap	Low density polyethylene (PE-HD)	04 PE-LD

Disposing of the product

The UPS contains electronic cards and batteries which are considered TOXIC and HAZARDOUS waste. When the product reaches the end of its operating life, please dispose of it in accordance with applicable local legislation. Disposing of the product correctly contributes to respecting the environment and personal health.

Thank you for choosing our product.
Our company is specialised in the design, development and production of uninterruptible power systems (UPS).

The UPS described in this manual is a high-quality product, carefully designed and manufactured to ensure the best performance.

This manual contains detailed instructions for using and installing the product.
Read the manual carefully before installation.
For information on how to use and to get the best performance from your equipment, this manual should be carefully maintained close to the UPS and be CONSULTED PRIOR TO PERFORMING ANY OPERATION UPON IT.

© The reproduction of any part of this manual, in whole or in part, is forbidden without the prior consent of the manufacturer: In order to make improvements, the manufacturer reserves the right to modify the product described herein, at any moment and without notice.

NOTE: Some images contained in this document are intended for guidance and may not reproduce faithfully the parts of the product represented.

For more information visit our website http://www.riello-ups.com.

INDEX

PRELIMINARY OPERATION 1

INSTALLATION ENVIROMENT 3

PRESENTATION OF THE UPS 5

BLOCK DIAGRAM 6

IGBT Rectifier 7

DC/DC Converter 7

Battery 8

Inverter 8

Static Bypass 8

Manual Maintenance Bypass (SWMB) 8

COMPLIANCE WITH STANDARDS 8

OPERATING MODE 9

NORMAL MODE (ON LINE) 9

BATTERY MODE 9

STANDBY-ON MODE 9

SMART ACTIVE MODE 9

AUTOMATIC STATIC BYPASS MODE 10

MANUAL BYPASS MODE 10

NXE SINGLE UNIT CONFIGURATION 11

CONNECTION TO THE ELECTRICAL INSTALLATION 11

AC INPUT 13

Neutral conductor 14

Selectivity 14

Residual Current Device 15

Emergency Power Off (EPO) 15

Backfeed Protection 16

External Manual Bypass and auxiliary switch 16

CONNECTION OF THE DC INPUT – BATTERY 17

Temperature Sensor and auxiliary battery switch contact 17

Parallel Battery strings 18

STARTING PROCEDURE 19

Battery Mode checking 20

MANUAL BYPASS PROCEDURE 21

SYSTEM SHUTDOWN PROCEDURE 22

REMOTE CONNEcTIVITY 23
REMOTE ALARMS AND COMMANDS (SELV CIRCUIT) 23
COMMUNICATION DEVICES 26
ETHERNET PLUG 26
USB – PLUG 26
SLOT 1 - 2 26
NXE PARALLEL SYSTEM CONFIGURATION 27
CONNECTION TO THE ELECTRICAL INSTALLATION 28
Input / Output AC 29
Manual Bypass and external auxiliary switches 30
Emergency Power Off (EPO) 31
Connection to the DC Input - Battery 31
Parallel Signal Connection 32
STARTING PROCEDURE 34
Single unit verification 34
Verification of the parallel system 35
Verification of the MANUAL BAYPSS circuit and system interlocks. 35
System Activation 35
Battery Mode checking 36
Maintenance of a single unit 36
Maintenance of the system 37
MANUAL BYPASS PROCEDURE 37
External Manual Bypass 37
Internal Manual Bypass 38
Re-starting the UPS System 39
SYSTEM SHUTDOWN PROCEDURE 39
REMOVAL AND INSERTION OF A UNIT DURING UPS OPERATION 40
"Hot" Removal Example 40
"Hot" Insertion Example 42
MAINTENANCE 43
BATTERY TEST 44
TECHNICAL DATA 45
ANNEX A 50
CONFIGURABLE ALARMS AND COMMANDS 50

PRELIMINARY OPERATION

PRODUCT INSPECTION

When delivering the product, the packaging must be inspected, ensuring that it is intact and free of damage or deformation.
In particular, check that none of the two shock indicators located on the outside of the packaging have been activated; If this happens, follow the instructions on the packaging.
Check the condition of the equipment through a visual inspection, inside and outside the unit.
Any deformation or damage may indicate shocks during transportation, which could compromise the normal operation.
The transport bill contains the details of the equipment.

STORAGE

For the following situations:

- installation being performed at a later date following the delivery;
- de-installation and storage while awaiting relocation,

place the equipment in a covered room and protect it from the direct contact of atmospheric agents and dust.
The environmental conditions allowed in the storage area are as following :
Temperature : -25 ÷ +60 °C
Relative humidity : 30 ÷ 95 % max (without condensation)

HANDLING

The equipment must be handled by qualified personnel only, equipped with the necessary Personal Protection Devices (PPE).
Unloading the equipment from the transport and then from the pallet to the floor must be done lifting the wooden chassis, or pallet, to which the equipment is secured, by a forklift suitable for the weight to be moved. Pay attention to the center of gravity to prevent overturning. Once the equipment is placed on the floor, for the final placement, a pallet truck or a forklift should be used.

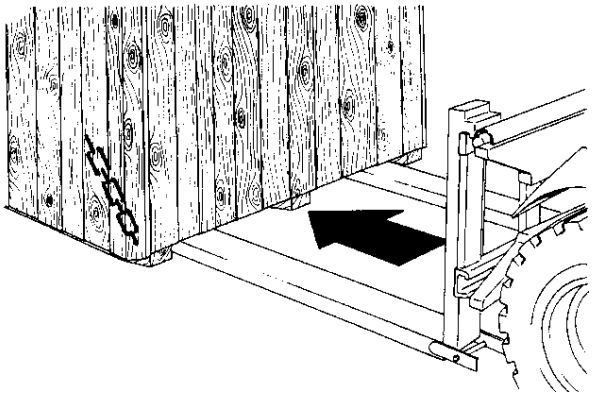

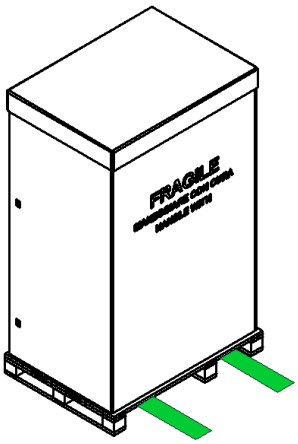

Forklift

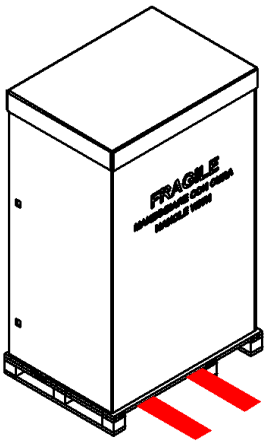

Trans pallet – Pallet truck

1. Before unloading, check if the forklift can to handle the weight of the equipment
2. The equipment can be lifted by accessing the front or from the rear only
3. The figures above show the correct position to insert the forks of the forklift in alignment with the centre of gravity
4. Ensure that the forklift forks are away from the edge by at least 30 cm on the opposite side
5. To avoid the unit tipping over during transportation, ensure that the equipment is securely anchored to the delivery vehicle before handling

PACKAGING REMOVAL AND POSITIONING

To remove the packaging proceed as follow:

1 Cut the plastic bands that secure the carton box
2 Carefully remove the carton box without scratching the panels
3 Unscrew the screws that secure the cabinet to the pallet

After removing the pallet, it is possible to place the UPS at the destination site and then proceed with the connections, following the instructions of the “Installation drawings”. In addition to the mechanical dimensions of the cabinet, the installation drawings also contain:

- The position of the holes at the cabinet base for fixing the structure to the floor
- The view of the floor support for the sizing of a structure to rise the cabinet, if required
- The position of the cable entry and dimensions of the terminals
- The position of the fans on the top of UPS, to place a structure for conveying air in and output, where required
- All the current values required to size the input, output and battery cables according to the standards
- An example of the cable sizing
- The information for the upstream protection device sizing
- Losses of the system (in kW), airflow due to the fans

Please follow the instructions on the specific manual to install the battery cabinet, if supplied.

INSTALLATION ENVIROMENT

AMBIENT CONDITION

The UPS system must be installed indoor in a temperature and humidity controlled area.
In the **"installation drawings"** look for the dimension and weight of the NXE model under consideration, and check the following conditions for choosing the installation location:

- Ensure that the floor can bear the weight of the UPS and any battery cabinet
- Avoid dusty environments
- Avoid narrow environments that could hinder normal maintenance operations.
- Avoid placing the device in areas exposed to direct sunlight or heat
- Ensure that the ambient temperature conforms to the following:
  - *minimum operating temperature :* *0 °C*
  - *maximum temperature for 8 hours a day: : + 40°C*
  - *average temperature for 24 hours: : + 35°C*
- Max relative humidity : 95% non condensing
- Max installation altitude : 1000m at nominal power
  (-1% power for every 100 m above 1000 m) max 4000 m

COOLING AND AIR FLOWING

The recommended operating temperature for the UPS and battery lifetime is between 20 and 25° C.
The battery lifespan is a function of the operating temperature, when changing the operating temperature from 20°C to 30°C the battery lifetime halves. To maintain the temperature of the installation room in the range 20÷25°C, a heat dissipation disposal system must be provided. Refer to the **"Installation drawings"** for the losses and air flow data.

In addition, to ensure correct heat dissipation from inside the UPS outwards, the following conditions must be guaranteed:

- ensure a distance of at least 60 centimetres from the ceiling, so as not to hinder air extraction,
- leave a free space of at least one metre at the front of the equipment to ensure both the circulation of the air and installation and maintenance operations;
- In addition to the air circulation due to the fans, heat dissipation is carried out by natural convection via the lateral surface of the cabinet; thus, a cabinet placed against a wall or in a hollow dissipates less heat than one located in a free environment.
  leave at least one of the three side walls free: right, left or rear.
- the lower side strips must not be fitted for installations where cabinets are placed side by side.

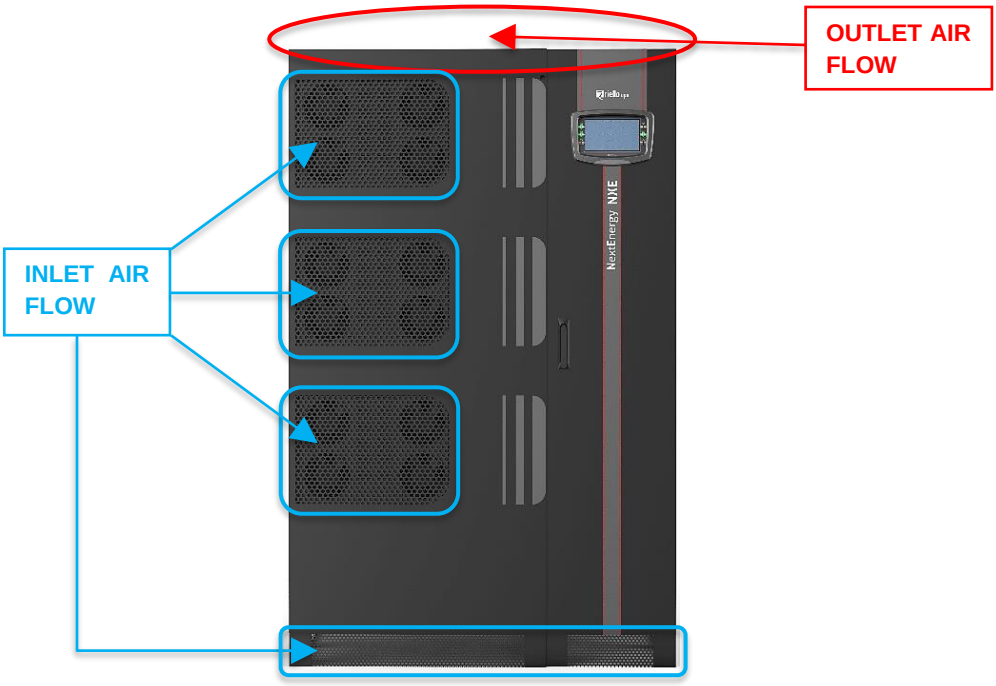

AIR EXCHANGE IN BATTERY ROOM

The room in which the battery box is installed must be provided with ventilation to keep the concentration of hydrogen generated during charging within safe limits. The room should preferably be ventilated naturally; if it cannot be, forced ventilation may be employed. Standard EN 50272-2 regarding air exchange, states that the minimum aperture must satisfy the following equation:

$$A\ [cm^2] = 28 \times Q$$

$$Q\ [m^3/h] = 0.05 \times n \times Igas \times C10 \times (1/10^3)$$

Where :

A = surface free of air input/output opening [cm^2]
n = number of battery elements;
Igas = [mA/Ah]
Q = air flow to be exhausted [m^3/h]
C10 = battery capacity [Ah] in C10

According to Standard :

Igas =1 in backup charging for VRLA type batteries (*);
Igas = 8 in fast charging for VRLA type batteries (*)
(*).for open vessel or nickel batteries, contact the battery manufacturer for details

Calculation Example :

Type of battery = VRLA
Capacity = 120Ah
Number of elements = 240 (40 12 V batteries)
Igas (**) = 8 (fast charging)

$$A = 28 \times Q = 28 \times 0.05 \times n \times Igas \times C10 \times (1/10^3)$$

$$A = 28 \times 0.05 \times 240 \times 8 \times 120 \times (1/10^3) = \underline{322\ cm^2}$$

(**) to increase the safety margin, we take the fast charging condition, aware that the battery mostly runs in backup charging mode. Using the backup charging value for Igas would result in a value of 1/8 (one eighth) of the above.

The air intake/outlet must be located to be most favourable to circulation, e.g.:
- openings on opposing walls;
- with a minimum distance of 2 m if both on the same wall

PRESENTATION OF THE UPS

The **NEXTENERGY** UPS (hereinafter referred to as **NXE**) has been designed using state-of-the-art technology to ensure maximum adaptability to high performance requirements.
The new NXE utilises tranformer-less architecture, with three-level Neutral Point Clamped (NPC) technology and PFC (Power Factor Corrected) input control ensures low running costs with the highest level of performance.

Features to highlight :

- **HIGH EFFICIENCY** → in **"on line mode"** due to the three-level technology
- **kVA = kW** → full active power available to the load
- **HIGH RELIABILITY** → due to redundant ventilation and standard control fans
- **HIGH AVAILABILITY** → due to easy parallel configuration systems
- **EASY MONITORING** → Using the latest colour touch screen technology, the connectivity module provides an intuitive navigation menu with icons that display the full status of the UPS

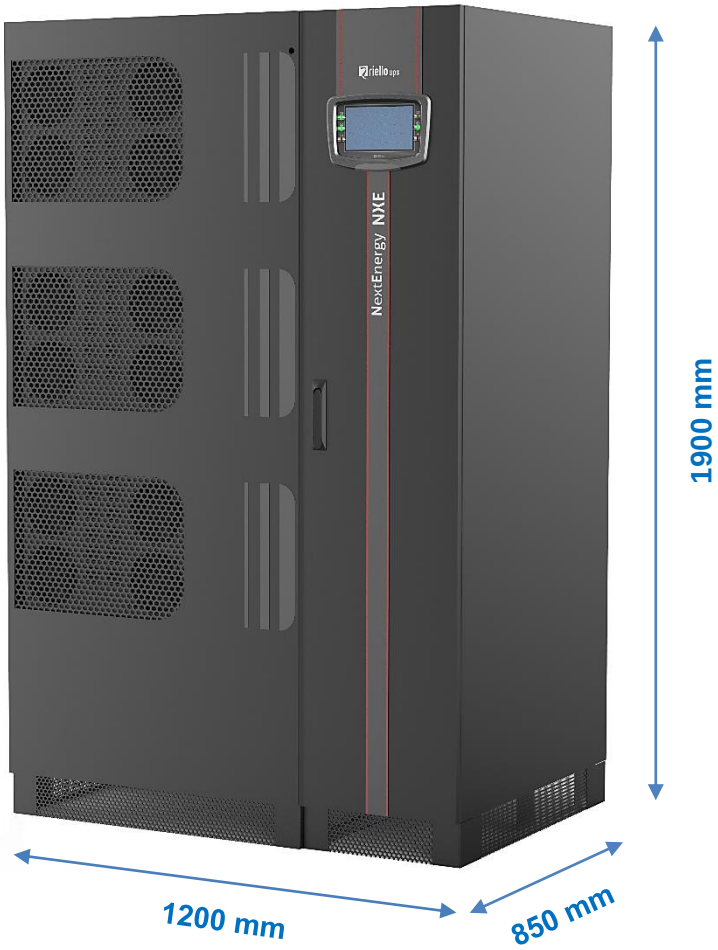

BLOCK DIAGRAM

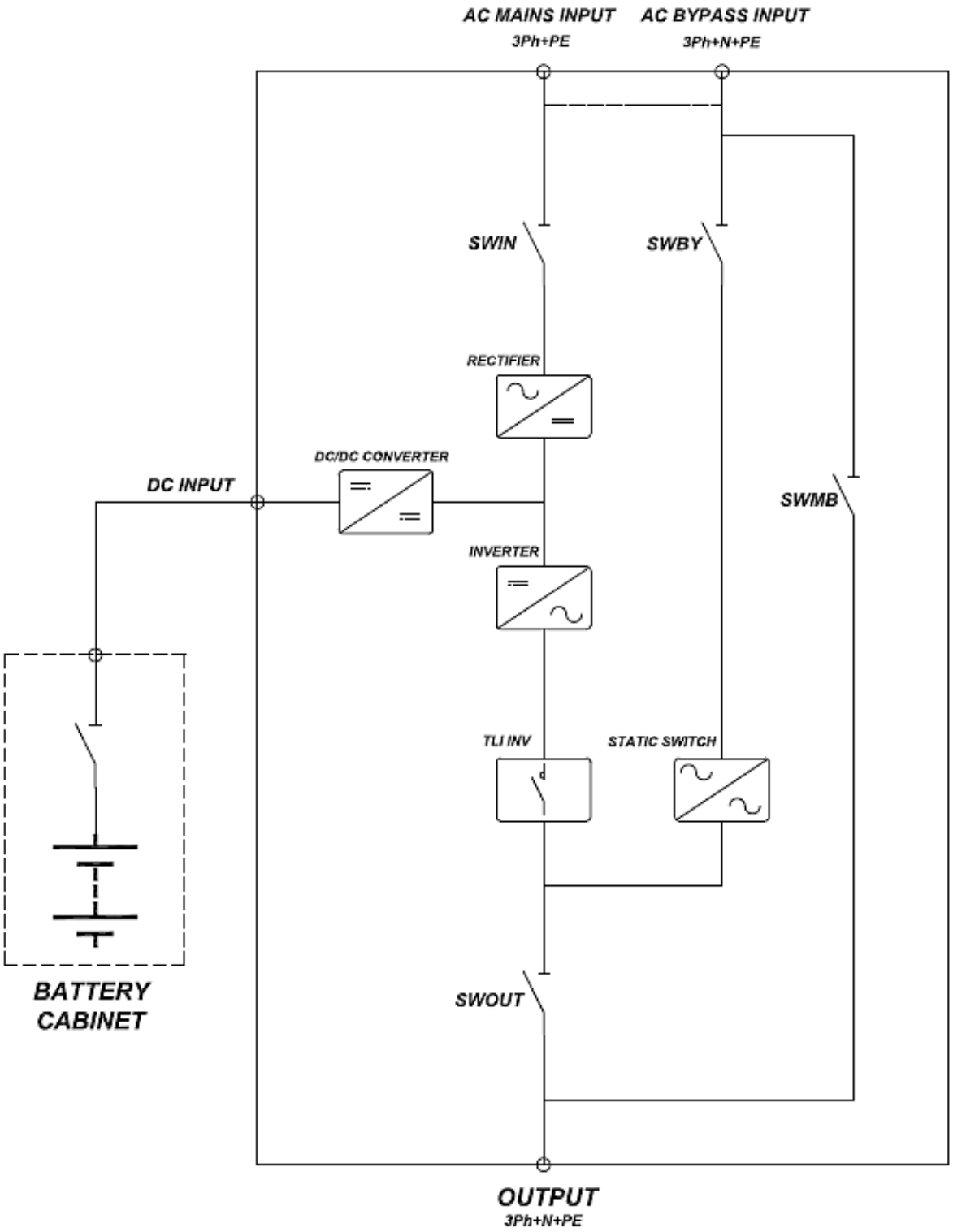

IGBT RECTIFIER

This represents the input stage and its function is to convert the alternating voltage of the power supply line into direct voltage.
The rectifier performs the following functions:

- It supplies the inverter and the DC/DC converter with continuous voltage
- Automatically charges the batteries
- Optimizes the input power factor and forces the current to be absorbed by the power mains in a sinusoidal mode

Power Walk-In Function

The **"Power Walk- In"** enables, upon the return of the power supply (following a mains supply failure) the slow increase of the power drawn (soft start), in order to prevent unnecessary stress of the generator, due to heavy load transients.
The soft start duration can be configured from 1 to 120 seconds.
The default value is 10 seconds (when the function is enabled).
During the transition, the required power is partially supplied from the batteries and partially from the mains, whilst maintaining a sinusoidal absorption.
The battery charger is activated once the transition has been completed.
It also possible to set the start delay time of the rectifier, to avoid simultaneous startup of all rectifiers in a parallel system.
The start delay can be configured from 1 to 120 seconds.
The Power Walk-In function can be configured via the display panel.

- Start delay time t0 –t1 : enables a non-simultaneous start-up of multiple UPS connected to the same power source

- Soft start t1 – t2 : avoids the oversizing of any generator that may be supplying the UPS

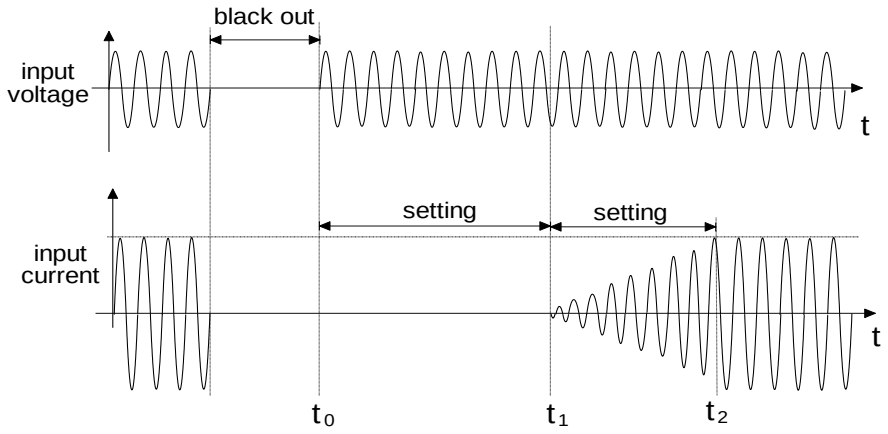

DC/DC CONVERTER

When the mains supply is present (within the acceptable limits), the DC/DC converter charges the battery by converting the voltage taken from the DC BUS generated by the rectifier, to the voltage level required by the batteries.
Vice-versa, during a mains failure, it converts the battery voltage to the level required by the DC BUS, allowing the Inverter to operate correctly.
From the default settings, the DC/DC converter recharges the batteries in cyclic mode:

1- During the first step the batteries will be recharged with limited current and increasing voltage (up to the set value). The charger will be active until full charge (Batt = 100% Ah) is reached.
2- Once the charging is complete, the DC/DC converter will be deactivated to remove any residual current entering the batteries and to extend their life.

In addition, the system automatically performs a daily "battery test" cycle, to check the charge status and, in case, instigate the recharge of the battery due to self-discharge.

BATTERY

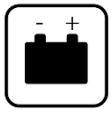

This is the energy reserve to power the load when the UPS is no longer supplied by the mains. The batteries can be contained within cabinets or arranged onto dedicated shelves within a battery room. The battery system must be ***provided with*** a switch and a protection device.

The load is completely powered with the energy accumulated in the battery, when mains supply is not present or when its voltage or frequency goes out of the acceptable range.
The display panel shows the expected residual BACKUP TIME, calculated according to the power supplied and the state of charge of the batteries. The value provided is indicative since the batteries change capacity during their life.
The backup time can be increased by disconnecting some of the connected equipment. When the remaining backup time goes lower than the value set as the END OF BACKUP TIME PRE-ALARM (factory-set at 5 minutes), the buzzer increases the sound frequency while the yellow BATTERY LED starts flashing; in these conditions, it is advisable to save any work in progress.
After this time the NXE will interrupt the power supply to the loads.
At the return of the main supply the UPS automatically restarts and starts recharging the batteries.

INVERTER

This is the output stage, it converts the direct voltage from the RECTIFIER or from the BATTERY SYSTEM into stabilised sinusoidal alternating voltage.
During normal operation in On-line mode or battery operation, the inverter is always running and the load connected to the output of the UPS is always powered by the INVERTER.

STATIC BYPASS

The static bypass allows the connected load to be transferred from the INVERTER to the BYPASS line or vice versa.
The switching can be either automatic or via manual control and occurs without any breaks in supply to the connected load as long as the inverter output is synchronised with the bypass supply.
The UPS has a device that prevents voltage back-feed via the BYPASS line due to an internal fault (BACK-FEED PROTECTION)

MANUAL MAINTENANCE BYPASS (SWMB)

This is a maintenance switch. The UPS can be excluded by closing SWMB and opening the other switches SWIN, SWBY, SWOUT while keeping the load powered. This operation is necessary when maintenance operations must be carried out inside the equipment without interrupting the power supply to the load.
The switch is sized for the rated power of the UPS.

COMPLIANCE WITH STANDARDS

The NEXTENERGY product is manufactured and tested in accordance with the STANDARDS

EN 62040-1 **Uninterruptible Power System (UPS) Part 1: General and safety requirements for UPS**

EN 62040-2 **Uninterruptible Power System (UPS) Part 2: Electromagnetic compatibility (EMC) requirements**

EN 62040-3 **Uninterruptible Power System (UPS) Part 3: Method of specifying performance and test requirements**

EN 60950-1 **Information technology equipment – Part 1 General requirements**

OPERATING MODE

The purpose of NXE is to ensure a perfect supply voltage to the equipment connected to it, both in presence and in the absence of the input mains power source. Once connected and powered, the system generates an alternating sinusoidal voltage of stable amplitude and frequency, not dependent on any mains variations.
All NXE series UPS are designed and manufactured for a long lifespan. However, it should be remembered that they are electrical equipment, and as such they need periodic maintenance. In addition, some components unavoidably have their own lifecycle, so they must be periodically verified and, in case, replaced if the conditions make it necessary: in particular batteries, fans and, in some cases, electrolytic capacitors.
Therefore, it is recommended to implement a preventive maintenance program, which will have to be specified and performed by specialised personnel and authorised by the manufacturer.
Our Service Department is available to customise the various maintenance options, in accordance with your needs.

NORMAL MODE (ON LINE)

The UPS is factory programmed to operate in On Line mode as described below

When operating in NORMAL MODE, the system operates “On Line” performing a double conversion.
This guarantees the greater protection to the load, since the incoming AC power, after being converted in DC, is recreated and then delivered as a clean and stable output to the connected load. The voltage supplied to the load is perfectly sinusoidal, with both the frequency and voltage being completely independent of the input (V.F.I Voltage and Frequency Independent).

BATTERY MODE

When the AC power supply is out of tolerances or not available, for example in case of blackouts or in case of voltage or frequency disturbances, the system automatically switches to BATTERY MODE, taking energy from the batteries to maintain the load powered (for the autonomy time of the batteries).
When the AC mains supply returns to be stable, the system switches back to normal On Line operation.

STANDBY-ON MODE

In this operating mode the load is powered by the Bypass line, while the batteries are kept charged by the rectifier.
If a failure occurs on the bypass line, for example the voltage or frequency exceeds the acceptable range, the load is instantly powered by inverter using the energy stored within the Batteries.
Standby-On operation significantly reduces the energy dissipated (losses) by the system.
Before using this function, make sure the load can accept an interruption of approximately 2 - 5ms in supply and can withstand the disturbances on the line.
Normally this mode of operation is used for less sensitive loads.
Activation of this mode can be made via the display panel.
SEE THE DETAILS IN THE "SETTINGS OF THE SYSTEM" IN THE DISPLAY MANUAL

SMART ACTIVE MODE

The UPS automatically selects ***On-Line*** or ***Standby-On*** operation according to the quality of the power supply. When Smart Active mode is activated, the power supply is monitored for a few minutes, after which, if the voltage has remained within the pre-set values, the output is switched onto the bypass line; otherwise the load remains powered by the inverter, while the observation time is approximately one hour. After this time, provided there has been no interference, the load switches onto the bypass line; otherwise the logic starts monitoring again for approximately one hour. The advantage of this operating mode is the reduction of losses, but only in case the bypass line guarantees high levels of stability, to protect the load.
Activation of this mode can be made via the display panel.
SEE THE DETAILS IN THE "SETTINGS OF THE SYSTEM" IN THE DISPLAY MANUAL

AUTOMATIC STATIC BYPASS MODE

This mode of operation determines the automatic transfer from "ON LINE MODE" to "STANDBY-ON MODE" when the load drops below a (set) level that is no longer considered to be particularly critical.
When the power delivered to the load returns to the set level, "ON LINE" mode is automatically restarted.
Activation of this mode can be made via the display panel.
SEE THE DETAILS IN THE "SETTINGS OF THE SYSTEM" IN THE DISPLAY MANUAL

MANUAL BYPASS MODE

Closing SWMB switch, the functionality of the UPS is excluded. This operation is carried out before maintenance or repair (activities exclusive to authorised and trained service technicians), to isolate the UPS whilst maintaining the supply to the connected load from the incoming mains supply.

To activate the NXE UPS into MANUAL BYPASS MODE without interrupting the power supply, follow the process as described in MANUAL BYPASS PROCEDURE

SWMB
WARNING: FOR PARALLEL CONFIGURATION UPS When the rated power of the load is higher than the rated power of the single UPS, operation of the UPS internal manual bypass (SWMB) switch must be prevented. Remove the handle or padlock the switch to prevent its operation. READ the chapter "NXE IN PARALLEL CONFIGURATION"

NXE SINGLE UNIT CONFIGURATION

CONNECTION TO THE ELECTRICAL INSTALLATION

Connection to the electrical installation must only be carried out by a **specialised technician**.
The first connection to be made must be the ground conductor.
The UPS MUST NEVER BE OPERATED WITHOUT AN EARTH CONNECTION

The input and output conductors and protective devices must be sized and positioned in accordance with the current local regulations

Read the Installation manual *"Installation Drawings"*, supplied with the UPS, containing all the necessary information to connect the unit to the electrical system.

The UPS can be connected to electrical systems that include TN, TT, IT earthing arrangements.

The UPS can be connected to the AC power supply with a single line or with 2 separate lines (mains and bypass line)

In case of protection systems that use RCD -Residual Current Device- (see section "RCD PROTECTION") at the AC input and, when separate lines are connected, a common RCD, for both lines, must be provided.

To separate the RCD an isolation transformer must be provided on one of the two lines.

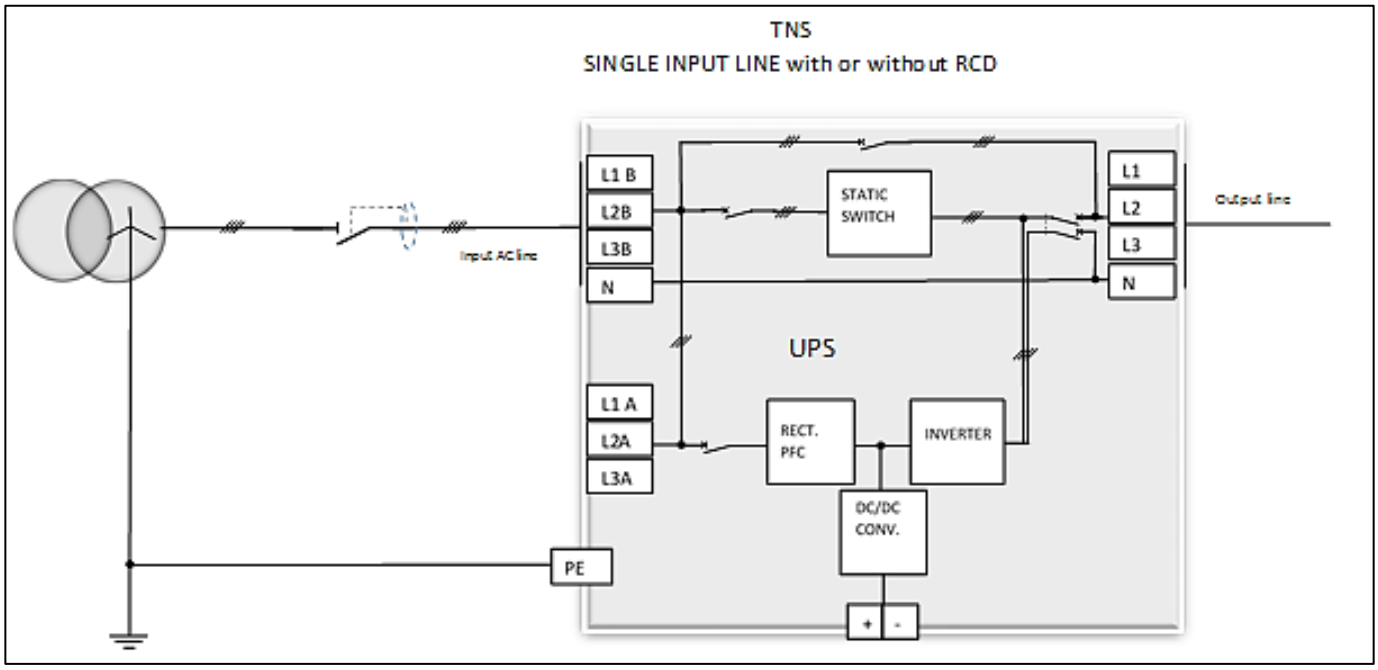

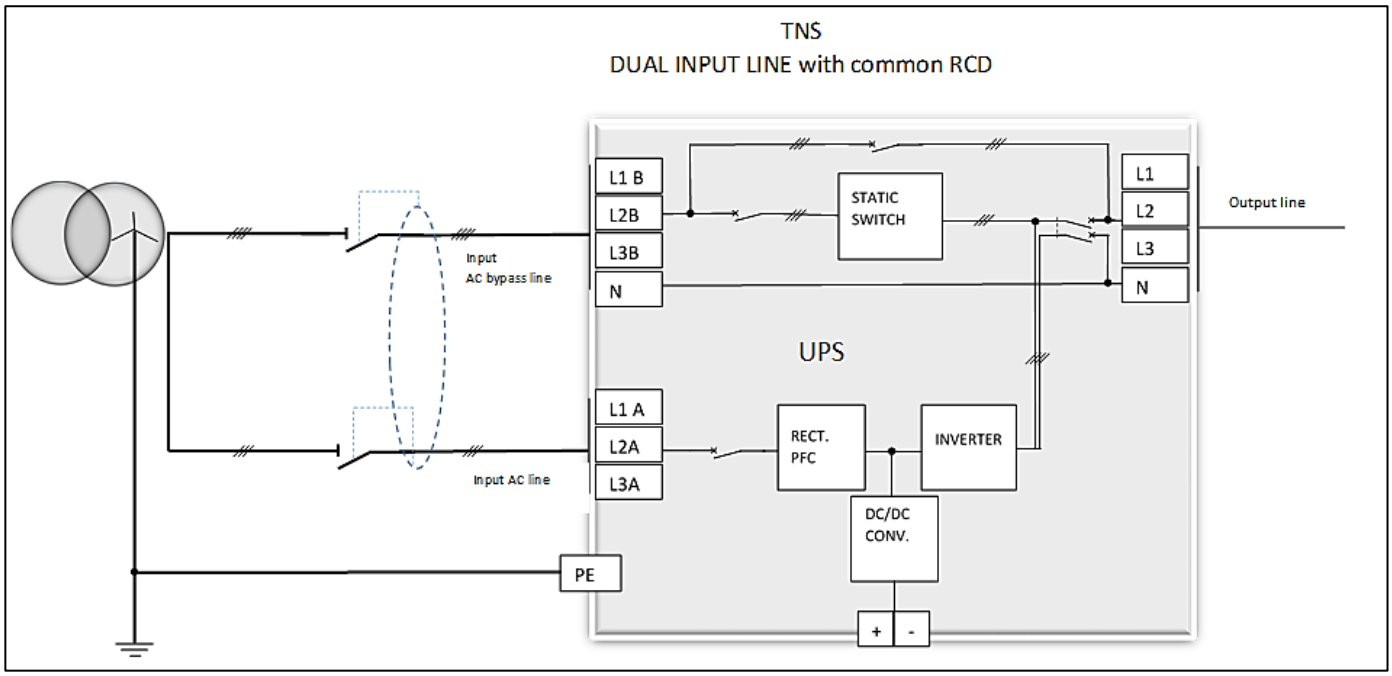
TNS
DUAL INPUT LINE with common RCD
L1 B
L2B
L3B
N
STATIC SWITCH
L1
L2
L3
N
Output line
Input AC bypass line
UPS
L1 A
L2A
L3A
RECT. PFC
INVERTER
DC/DC CONV.
Input AC line
PE
+
-

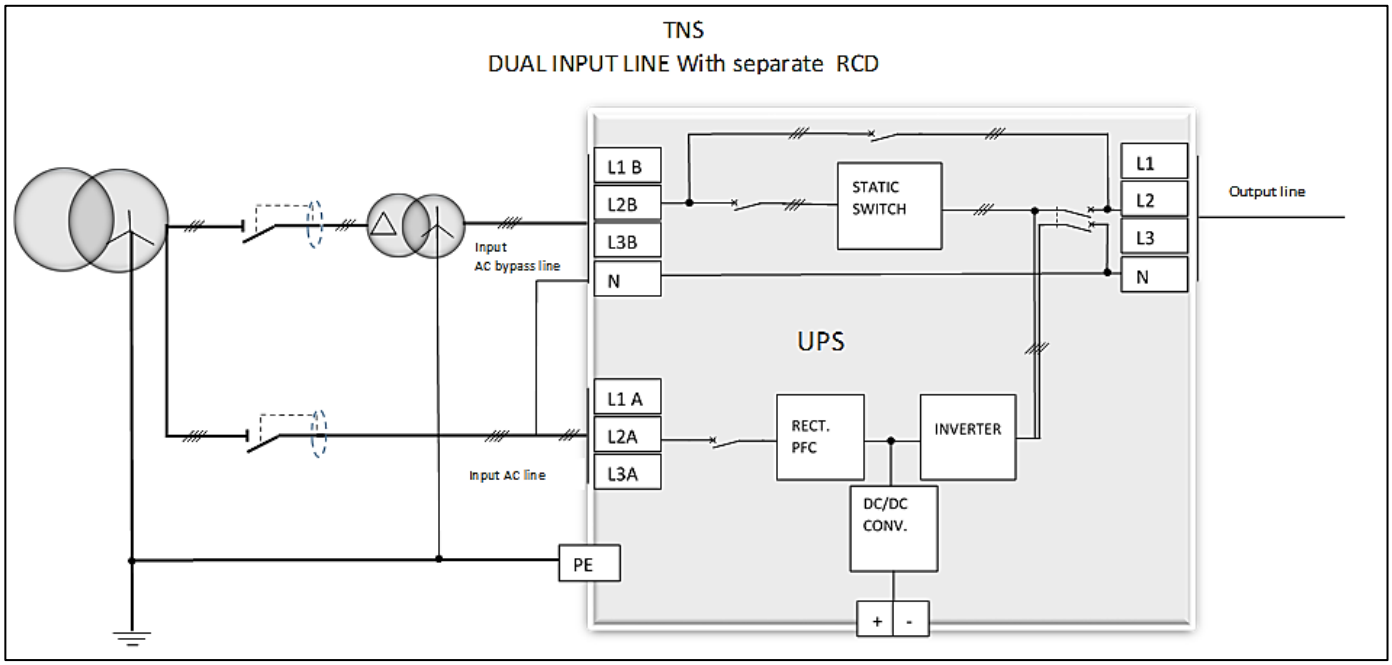
TNS
DUAL INPUT LINE With separate RCD
L1 B
L2B
L3B
N
STATIC SWITCH
L1
L2
L3
N
Output line
Input AC bypass line
UPS
L1 A
L2A
L3A
RECT. PFC
INVERTER
DC/DC CONV.
Input AC line
PE
+
-

AC INPUT

On the UPS input supplies, within the distribution panel upstream of the system, overload protection devices must be provided and they must be suitably sized in order to open in the event of a short circuit within the supply.
The sizing of the protective devices must take into account the two different installation options

- Single input supply (common rectifier and bypass input supply)
- Dual input supply (separate input rectifier and bypass supplies)

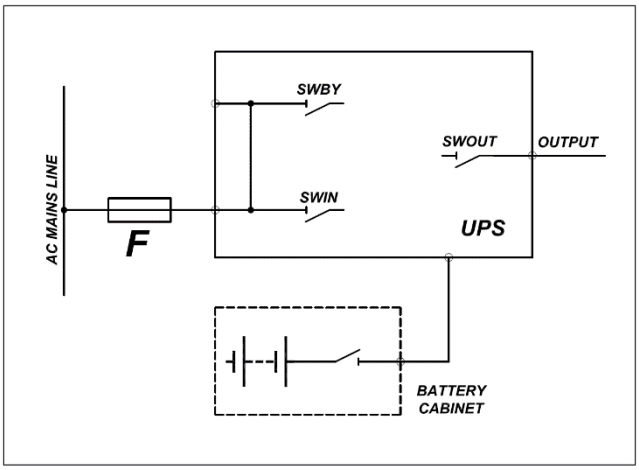

Single Power Supply

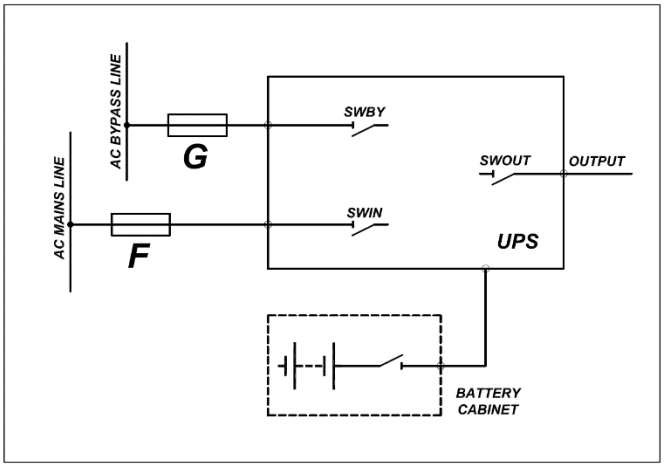

Dual Power Supply

The F and G devices must have the same technical specifications as indicated in the “Installation Drawings” manual.
As an alternative to a fuse, it’s possible to use an equivalent circuit breaker.

Please read the *“Installation Drawing”,* supplied with the UPS, containing all the information necessary for connecting the unit to the electrical system.

On all switching devices, located upstream and supplying the UPS, the following label must be placed.

Before working on this circuit

- Isolate Uninterruptible Power System (UPS).
- Then check for Hazardous Voltage between all terminals including the protective earth.

Risk of Voltage Backfeed

NEUTRAL CONDUCTOR

> ⚠ The neutral state does not depend on the SWBY or SWMB switch position

The output neutral is always connected to the input neutral

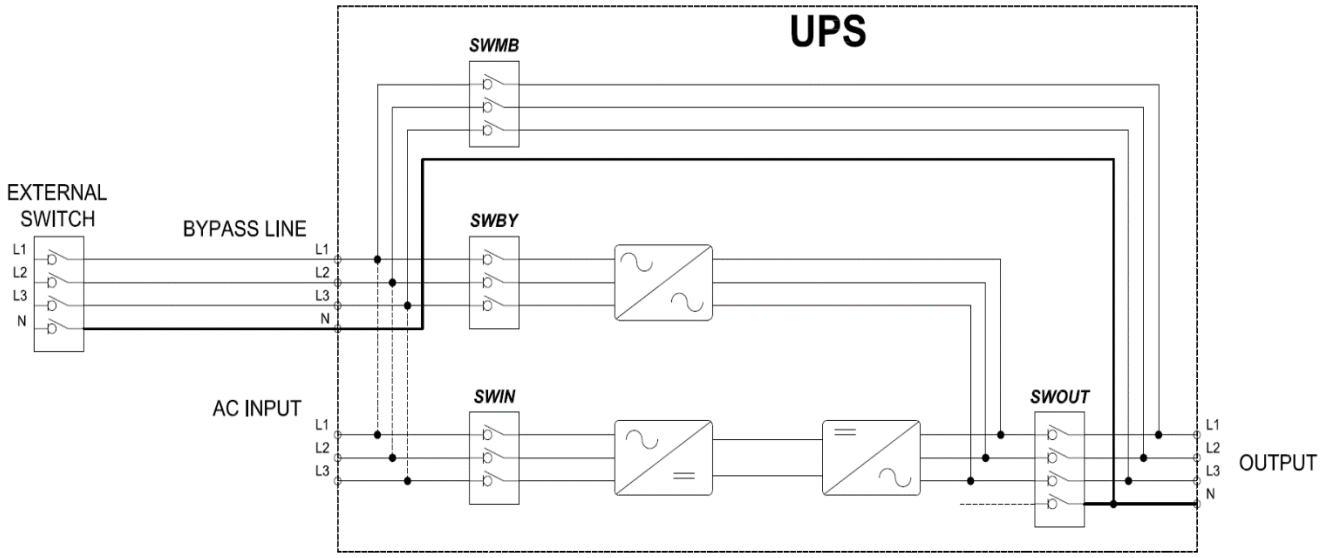

If the Neutral is not required for the load: the UPS can operate without modification, in the case of a non-Distributed Neutral Conductor.

SELECTIVITY

If the UPS provides power to multiple loads downstream, to ensure segregation of a short circuit caused by one of the loads and to enable continuity of the voltage to the others, the maximum size of the protection devices of the individual loads must comply with the recommendations in the tables provided below.

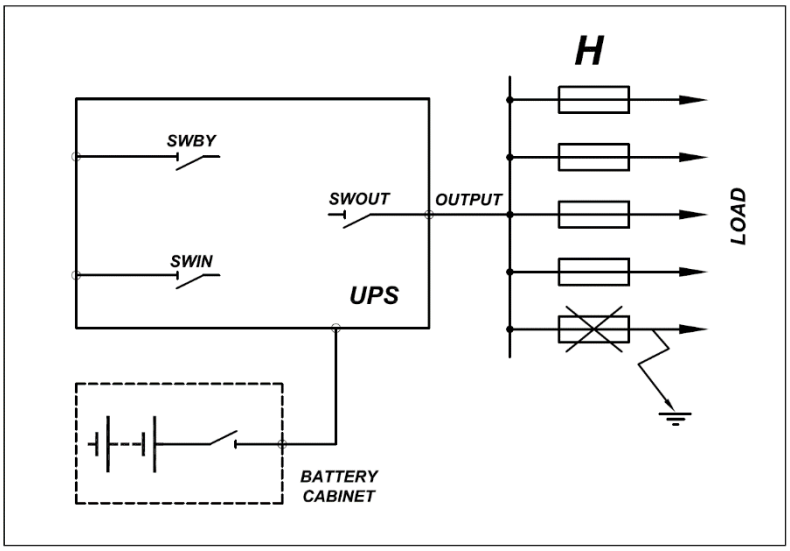

For the correct choice of protective devices to be installed downstream of the UPS, the two operating modes must be taken into consideration:
power from input bypass supply and ***power from the battery***

Condition when the Bypass supply is present The maximum protection device size downstream of the UPS must be selected in conjunction with the internal protection of the bypass circuit (check the I²t value in the "technical data" table).
Here are some examples of the fuse types "gG" and "aM"

UPS Size (kVA)		250	300
Rated output current	[A]	361	433
Max size gG type fuse	[A]	160	160
Max size aM type fuse	[A]	125	125

Power supply from battery To ensure discrimination for the load during battery operation (or in the absence of the bypass supply whilst the supply to the rectifier is still available), the maximum protection size must be determined by referring to the short-circuit current available from the inverter (see “technical data” table). The device must open before the inverter is forced to switch off due to the fault (1 second).

Here are some examples of the fuse types "gG" and "aM"

UPS Size (kVA)		250	300
Rated output current	[A]	361	433
Max size gG type fuse	[A]	100	100
Max size aM type fuse	[A]	63	63

RESIDUAL CURRENT DEVICE

If the protective devices on the input supplies are required to be RCD’s, to ensure protection of electrical installation, or against indirect contact, make sure that these are:

- type B sensitive to the presence of DC and unidirectional components
- Minimum operating current 1 A
- Interval delay greater than or equal to 0.1 s

If there are no RCD’s within the supplies to the load, the loss of insulation within any load will cause the operation of the input supply protection device.

EMERGENCY POWER OFF (EPO)

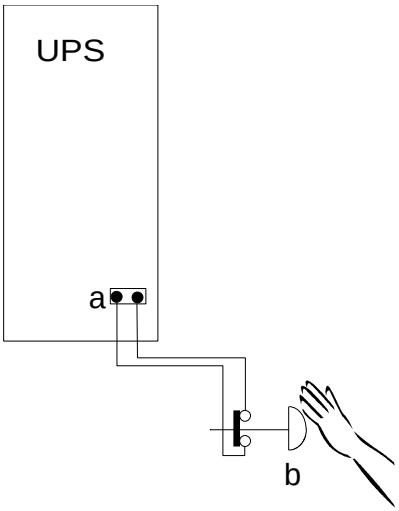

NXE can be connected to a remote emergency shutdown device, as required by EN 62040-1 Standard. With this remote control, it is possible to shut down the UPS when a hazard situation occurs.
To connect the remote device (red emergency button not supplied), the jumper at the terminals identified as EPO (see the figure to the right) must be removed and cables from the device must be connected in place of the jumper.

To activate the EPO command, the emergency button must contain a volt free contact that opens upon activation (normally closed).

The connection must be made with the UPS turned off.

See the terminal positions in detail in the fig. *LOCATION OF SIGNAL TERMINALS* in the chapter *REMOTE CONNECTIVITY.*

BACKFEED PROTECTION

NXE is equipped with a device that prevents the inverter voltage back to the Bypass line due to an internal fault.
The protection acts by switching off the inverter and switching over to the Bypass line, if the fault occurs when the UPS is operating from batteries, the load will be no longer powered.
In case of a failure that involves back-feed voltage, in order to be able to avoid the inverter turning off and to maintain the power being supplied to the connected load whilst on battery, it is necessary to install a contactor within the Bypass supply upstream of the UPS.
One of the I/O interface card relays (see REMOTE CONNECTIVITY chapter) can be programmed to detect the backfeed failure, and, in case of failure, its contact can be used to open the contactor.

EXTERNAL MANUAL BYPASS AND AUXILIARY SWITCH

The presence of a general bypass cabinet (see the figure to the right), enables the operator to completely isolate the UPS, enabling its safe removal whilst the load remains powered. The connection of the auxiliary contacts from the external circuit breakers (or switches) enables the status of the devices to be monitored and thus reported to the UPS control, in case of repair or maintenance operations.

Connect the auxiliary contacts from the external manual bypass and the output switch to the terminals of the "auxiliary switch signals" board, located in the communications & options box, located under the UPS internal switches.

- Normally Open (NO) contact from the output switch auxiliary to terminals 8-9 (from the left) of the terminal connector.
- Normally Closed (NC) contact from the Bypass switch auxiliary to terminals 6-7 (from the left) of the terminal connector.

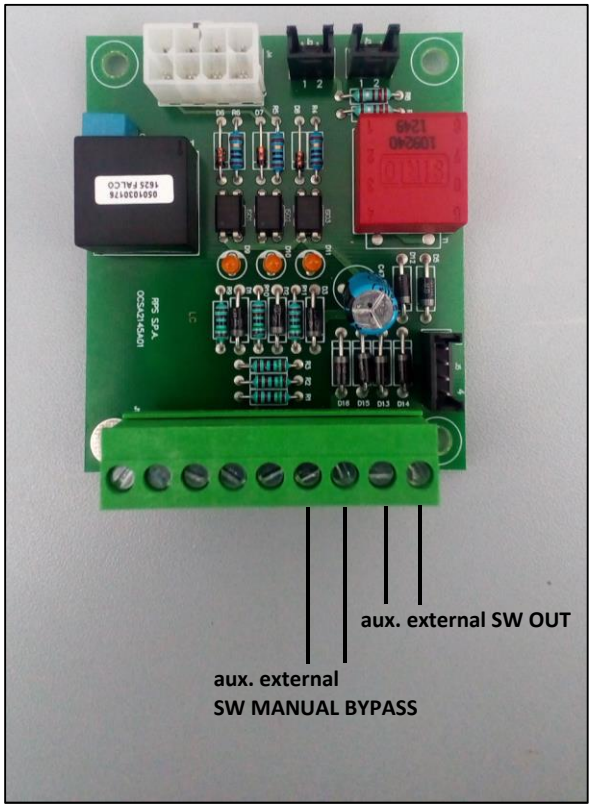

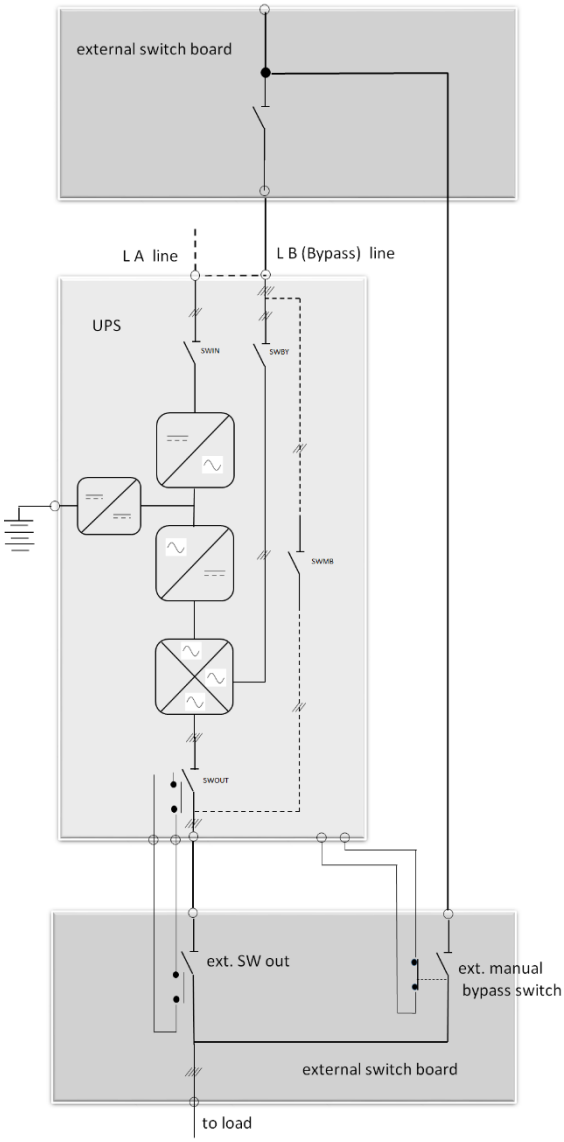

See position detail in the figure: LOCATION OF I/O SIGNALS TERMINALS in the chapter "REMOTE CONNECTIVITY

CONNECTION OF THE DC INPUT – BATTERY

The UPS has been designed to be connected to a battery system (DC input) consisting of 240 Pb cells. (40 x 12 V batteries)
(See details in the "Technical Data" table)

To safely connect the batteries (from a cabinet or from a stand) to the UPS, they must be equipped with a suitable overcurrent protection device in both poles and with a isolation device that opens both contacts.
Refer to the safety instructions supplied by the battery manufacturer.

Connect the PE protection cable from the battery cabinet to PE terminal of the UPS cabinet only

Read the "Installation Drawings", supplied with the UPS, containing all the information needed to connect the battery cabinet.

The battery switch can only be closed when the UPS has been started , refer to "Starting procedure"

The protection devices must be sized to protect the batteries and the connecting cables and must be suitable for opening the DC circuit voltage.
In addition, in case of a short circuit, the current coming from the battery system must be able to open the protective devices.

As an example, the operating curves of fuse types gL / gG and aR are considered

1- using fuses with operating curve type gl / gG :
The maximum fuse size to be used (Amps) is equal to 2 times the battery capacity (Ah)

2- using fast fuses with operating curve type aR :
The maximum fuse size to be used (Amps) is equal to 2.5 times the battery capacity (Ah)

TEMPERATURE SENSOR AND AUXILIARY BATTERY SWITCH CONTACT

Located on the "battery auxiliary signals" board are the following contacts which can be used in conjunction with the battery system. This card is located next to the battery input connection points:

1- Normally Open (NO) contact from the battery switch auxiliary, located in the battery panel (SWbatt).
To signal the status of the battery switch to the UPS and activate an alarm when open. Connect to terminals 8-9 (from the left).

2- Battery temperature monitoring sensor connection (optional) located inside the battery cabinet, this can be installed in order to adjust the battery voltage according to the temperature of the battery environment. Connect to terminals 2-3 (from the left) and connect the cable screen to terminal 1.

See the position detail in the figure on the next page: LOCATION OF I/O SIGNALS TERMINALS in the chapter "REMOTE CONNECTIVITY.

For the temperature sensor, only the kit supplied by the manufacturer can be used. Any unsuitable uses other than the specified ones may cause malfunction or failure to equipment.

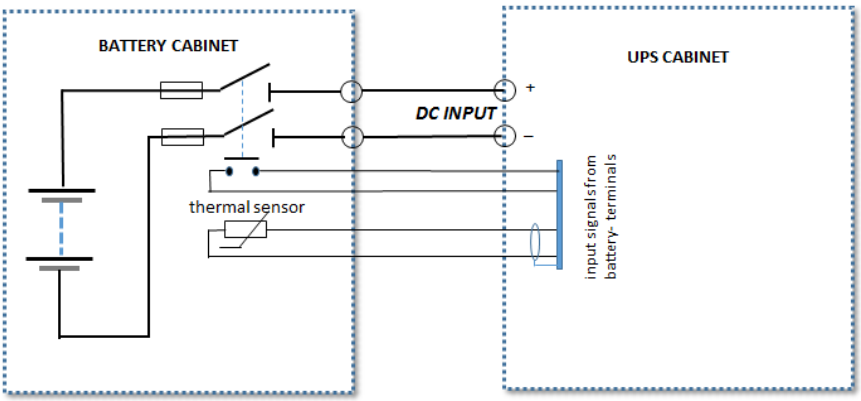

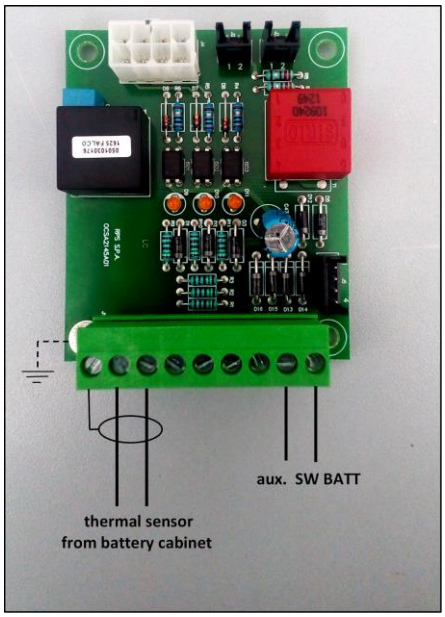

PARALLEL BATTERY STRINGS

When multiple battery strings are connected in parallel in order to obtain the required battery autonomy, please follow the recommendations as shown below:

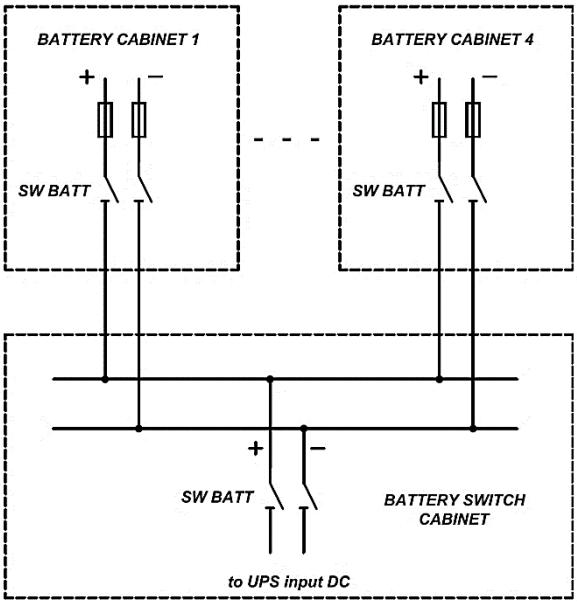

Each battery string must be provided with its own protective and disconnection devices.

For systems with multiple battery cabinets, a common bus bar connection cabinet and main battery switch must be installed (contact your commercial support for more information).

STARTING PROCEDURE

Once all power connections have been checked and all terminals are adequately tightened, it's possible to start the system. To start the UPS, perform the following steps in order:

1. Make sure that all the internal switches, the battery switch and any external disconnection devices are in the "open" position.
2. Close the power supply switches located upstream of the UPS
3. Close the UPS input switches **SWIN** and **SWBY**
4. Close the UPS output switches **SWOUT**
5. Wait a moment for the UPS and display start up.
   - DC-BUS pre-charge
   - Start of rectifier
   - Output power from Bypass line
   - Start of inverter
   - Output powered from inverter line
6. Configure the battery capacity (see "*Display Manual* "). Please read the warning below
7. Close the SWBATT switch within the battery cabinet
8. At this point it is possible to supply power to the connected loads by closing the respective load supply switches

Battery Capacity

It is important to enter the correct battery capacity value; this value is used by the system control to set the charging current and for the calculation of the autonomy time. By default, the capacity is set to a value equal to the power of the UPS. For example, a 300kVA UPS by default is set to 300Ah

SWMB Switch

The SWMB switch must not be closed during the normal operation of the UPS, it is only closed during UPS maintenance operations to ensure that power remains supplied to the connected load.

At first activation, the UPS starts in on-line mode; if other operating modes (Standby-on / Smart Active / etc) are required, then please refer to the Display Manual for further instructions on how to proceed.

BATTERY MODE CHECKING

Once the installation is complete, it is recommended to check the operation of the UPS on battery (Battery Mode), even for a short time, as the battery may not be fully charged.
To perform the test, it is possible to activate the battery discharge procedure from the display panel (see the "*display manual*"), during this test the power supplied to the load will be completely taken from the batteries.
The test is performed in complete safety with respect to the load, as the rectifier remains on, ready to return to normal operation should the connected battery not be able to supply the load.
It is possible to return to normal operating mode via the display.
Battery charging will be automatically started following the test.

Battery Autonomy	
⚠	Before performing a full battery discharge test, allow the UPS to charge for at least 8-10 hours (check the battery characteristics and charge current). At first discharge, the obtained autonomy may be slightly lower than the expected time, some charge and discharge cycles will be required in order to improve this value. In fact, battery capacity is not a constant value over time, therefore it will increase initially over several charge and discharge cycles. Then remain constant for a few hundred cycles and then slowly reduce over time.

MANUAL BYPASS PROCEDURE

In manual bypass mode, the load is powered by the Bypass supply, during this operation the UPS will not provide backup for the connected load.
This mode is normally used to perform maintenance within the UPS. The maintenance activity must only be performed by trained and certified personnel.

If the Bypass supply is present and within tolerance in terms of voltage and frequency, it is possible to carry out a manual maintenance Bypass operation by performing the following process in this order:

1- Transfer the load from the inverter onto the bypass supply via the display panel (see bypass operation in the “display manual”.
2- Confirm on the display that the load has been transferred and that the inverter has switched off
3- Close the **SWMB:** manual bypass switch
4- Open the switches inside the UPS: SWIN, SWBY, SWOUT and the external battery switch SWBAT
5- Now the UPS is switched off and the load is powered by the bypass supply via SWMB switch.

After performing the operations as shown above, the **Specialised Technician** must wait at least ten minutes before accessing the internal assemblies within the UPS so that the capacitors can discharge. Be careful, however:
The input and output terminals will remain live with dangerous voltages present.

To return the UPS to Normal Operation, following the maintenance and after refitting all the previously removed panels:

1- Close SWBY
2- Wait for the Automatic Bypass line (check on the display)
3- Close SWOUT
4- Verify on the display that the bypass line is active and supplying the output
5- Open SWMB
6- Close SWIN
7- Wait for the load to be transferred from the bypass line to the inverter line (check on the display)
8- Close the SWBAT External Battery Switch
9- Wait for the display to show "NORMAL OPERATION" (see details in the "display manual")

SYSTEM SHUTDOWN PROCEDURE

With the following process, supply to the connected load will be switched off, then, the UPS will be completely switched off.

1- Open all of the load switches
2- Open the UPS output switch **SWOUT**
3- Open the UPS input switches **SWIN** and **SWBY**
4- Open the external Battery Switch SWBATT
5- Open the power supply switches upstream of the UPS, so that the UPS is completely isolated.

The load is no longer powered, after a few seconds the display will also turn off.

Wait at least 10 minutes before accessing the internal parts

Check with a multimeter that there are no voltages on the Input / Output terminals.

REMOTE CONNECTIVITY

LOCATION OF I/O SIGNALS TERMINALS

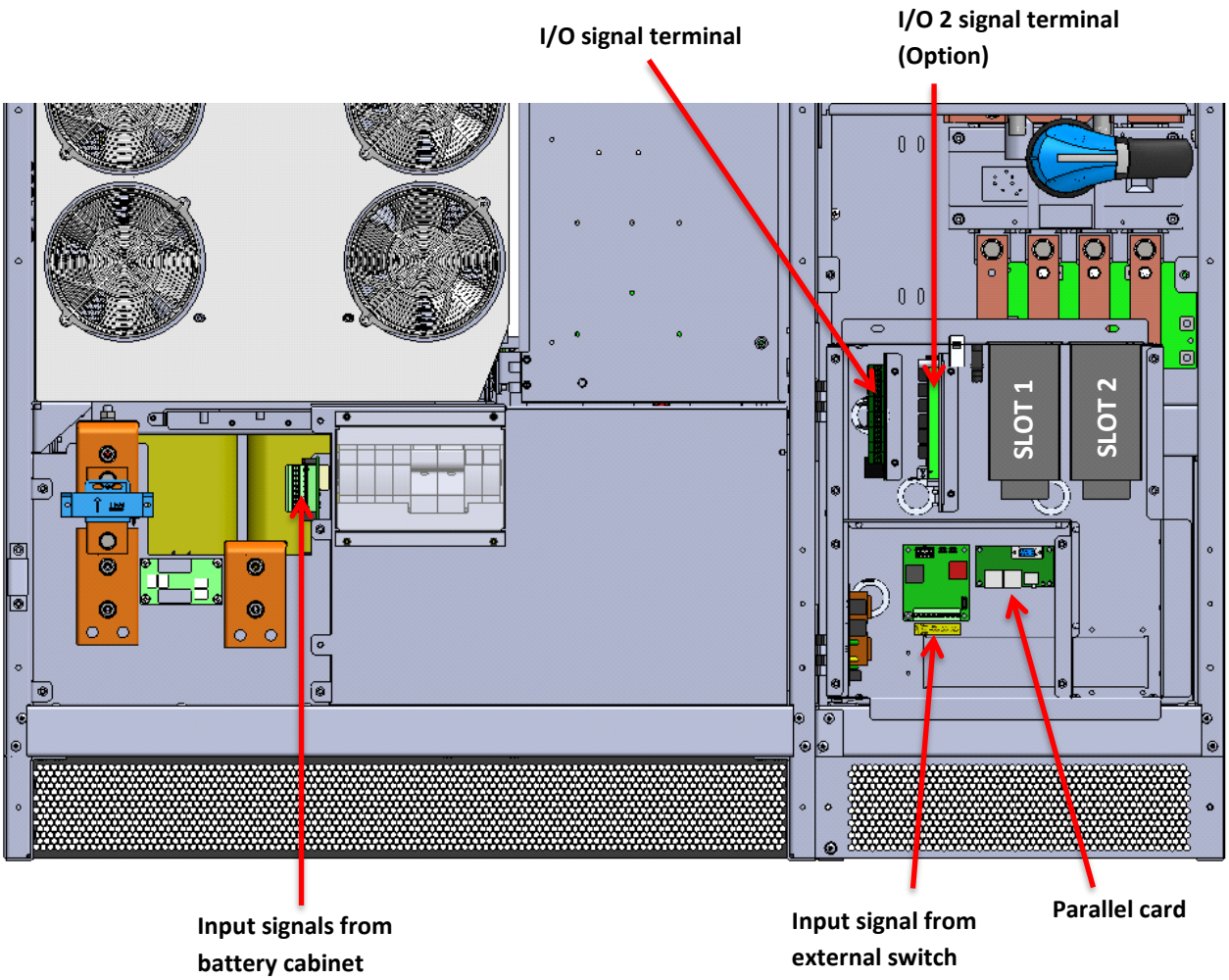

REMOTE ALARMS AND COMMANDS (SELV CIRCUIT)

In the standard version, the UPS is equipped with an interface card that allows the unit to be monitored remotely; in addition, it will also enable some commands to be activated *(see location of I/O signals terminals).*

The interface card provides 19 terminals with the following:

- 2 commands via closed dry contacts + EPO function (via opened dry contact)
- 4 dry switch contacts reporting 4 alarms or operating states of the UPS.

Connect to SELV circuits only
Observe the cable path as shown above

The Alarms and Commands can be customised with functions others than default (programmed in the factory).
The change of this configuration can be done via the display panel by authorised service personnel only.
See Annex A for the list of the available functions

COMMANDS	DEFAULT FUNCTIONS	Nr. terminal
COMMAND EPO	**Emergency Power OFF** (opening contact)	1-2
COMMAND IN1	**Inverter Power OFF** (Closing contact for 2 seconds approx.)	3-4
COMMAND IN2	**Battery Charge Block** (Closing contact for 2 seconds approx.)	6-7
AUXILIARY power supply	12Vdc 100mA (max) available for any external circuit	5-7

Max Voltage 42 Vac (60 Vdc) / Max 1 A

ALARMS	DEFAULT FUNTIONS	Nr. terminal
ALARM 1	**BYPASS ON** Load on bypass supply or Inverter failure	17-18-19
ALARM 2	**BATTERY ON** Battery operation: the contact changes state when the UPS is operating in “Battery Mode” for a mains or input supply failure	14-15-16
ALARM 3	**BATTERY LOW** Battery Pre-Alarm end of discharge. The contact changes state when, during battery operation, the remaining battery discharge time has reached the set value. After this time the load will remain unpowered (the pre-alarm pre-set factory default value is 5 minutes)	11-12-13
ALARM 4	**OVERTEMPERATURE or OVERLOAD**	8-9-10

I/O signal terminals

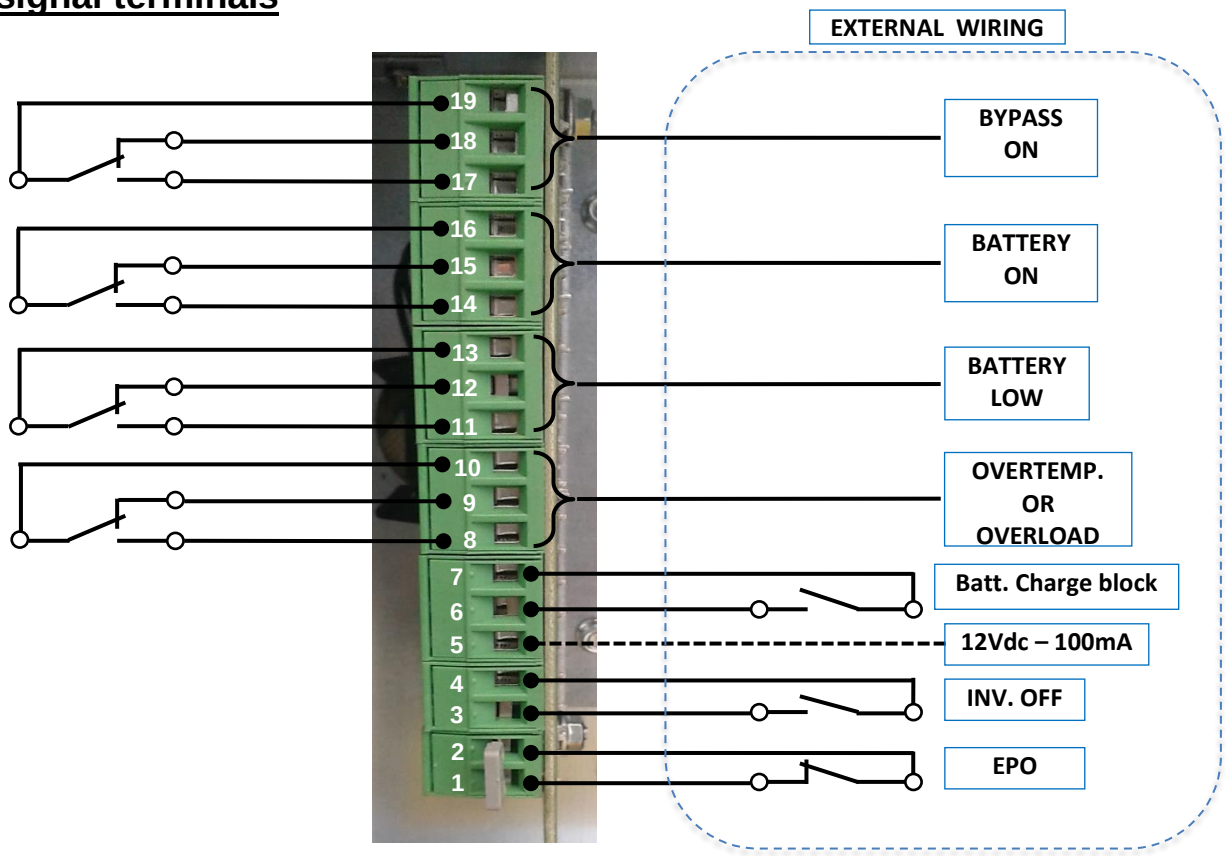

An additional I/O signalling card can be installed (optional) see *“LOCATION OF I/O SIGNALS TERMINAL”*

The card provides 6 alarms (dry contacts) + 2 commands (which can be activated by the dry contacts)

See Annex A for the lists of the available functions

The installation of this optional card must be carried out by service personnel only.

COMMUNICATION DEVICES

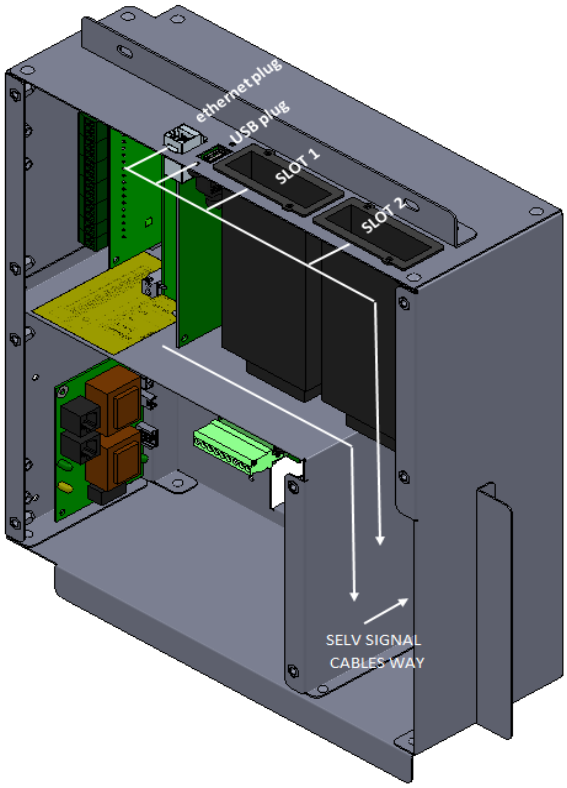

Monitoring and communication interfaces

ETHERNET PLUG

UPS Monitoring via Ethernet port is performed with UDP protocol using "Power Shield3" software available on the website www.riello-ups.com.
Power Shield3 is a proprietary software and allows the user to monitor the UPS system, including all states and measurements.
For more information, see the dedicated PowerShield3 user manual.
From the same Ethernet port, SMTP is also available to send e-mail messages to a list of recipients for any alarm or report alerts.

USB – PLUG

This plug, located in the same area, can be used for the following functions:

- Copy the display manual to a USB pen drive
- Export History and RAM files to a USB pen drive
- Export the UPS settings data to a USB pen drive
- Load the UPS data settings from the USB pen drive
- Update Display Software
- Screenshot function

SLOT 1 - 2

This slot can be used to insert additional communication cards for several monitoring management and different protocols.
See www.riello-ups.com or contact the sales service.

The USB plug located in the upper area of the unit is for service use only.

NXE PARALLEL SYSTEM CONFIGURATION

NXE Parallel System Block Diagram

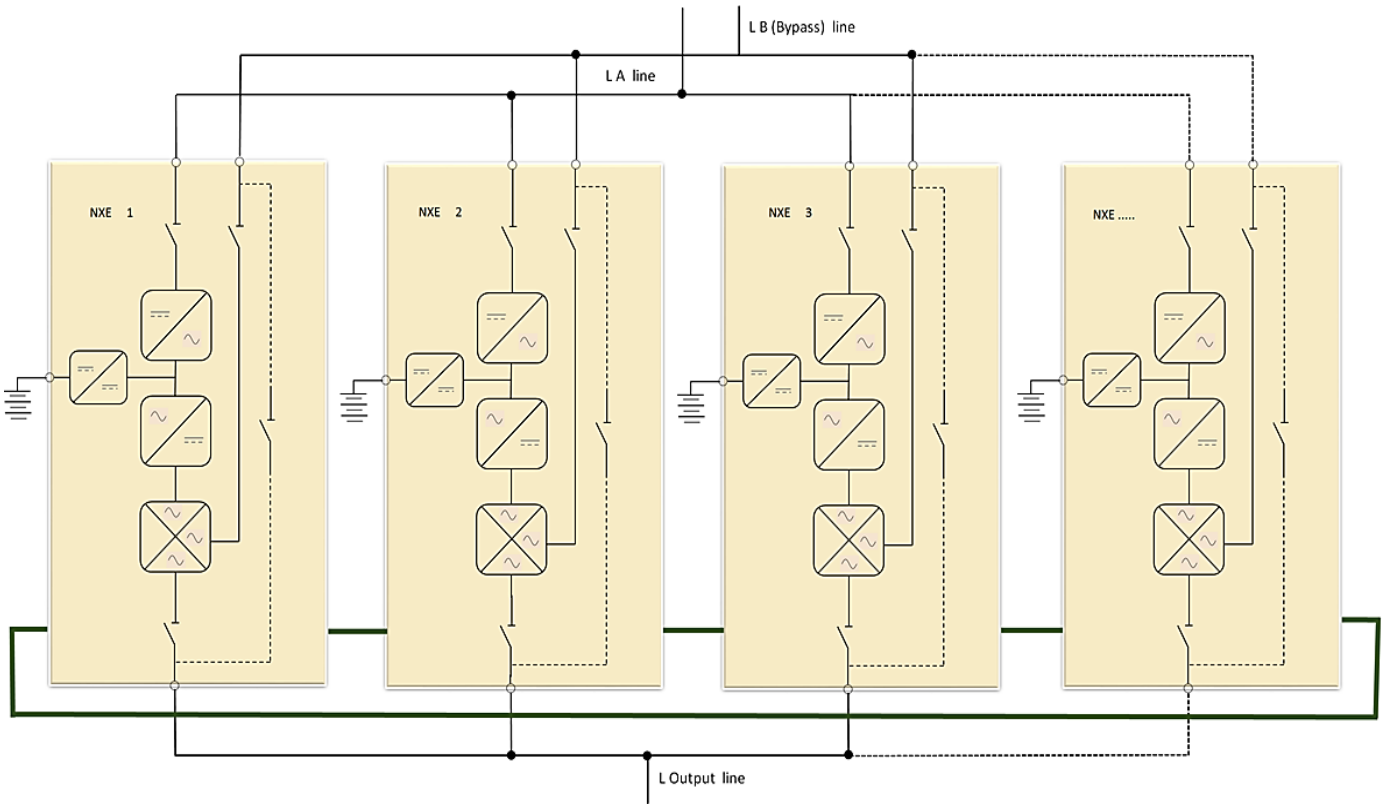

NXE UPS can be connected in parallel with the purpose of increasing the effective output power and, or, the level of “availability”. Up to 8 units can be connected in parallel.

The load applied to a parallel system can be higher than that which can be applied to a single unit due to the automatic distribution of the power being delivered. The "availability" increase is only provided when the system is operating in a "redundant" mode.

The system is "redundant" when the total power of UPSs installed in parallel, exceeds at least the rated power of a single unit, compared to that required by the load.
This condition means that even if a unit is switched off due to a failure or planned maintenance, the remaining operational units have the capacity to ensure that the connected load remains powered.

Parallel UPS are synchronised via a ring connection using an Ethernet cable, this provides the interchange of information between the UPS. The ring connection method ensures that the system has connection redundancy.

The cable transmits the signals from the "Master" UPS to the other "Slave" UPS via an opto-isolated system.

The operational control assumes that the unit, which is first activated, becomes the "Master" by taking command of the other "Slaves". In the event of a failure of the "Master" unit there is an immediate handover to a "Slave" unit which in turn becomes the "Master”.

CONNECTION TO THE ELECTRICAL INSTALLATION

> Refer to the section "CONNECTION TO THE ELECTRICAL INSTALLATION" within the chapter "NXE SINGLE CONFIGURATION".
> All of the information contained within remains valid, with the following additions.

In cases where the protective system utilises an RCD (Residual Current Device) at the input of the UPS, the RCD must be common to all UPS input supplies

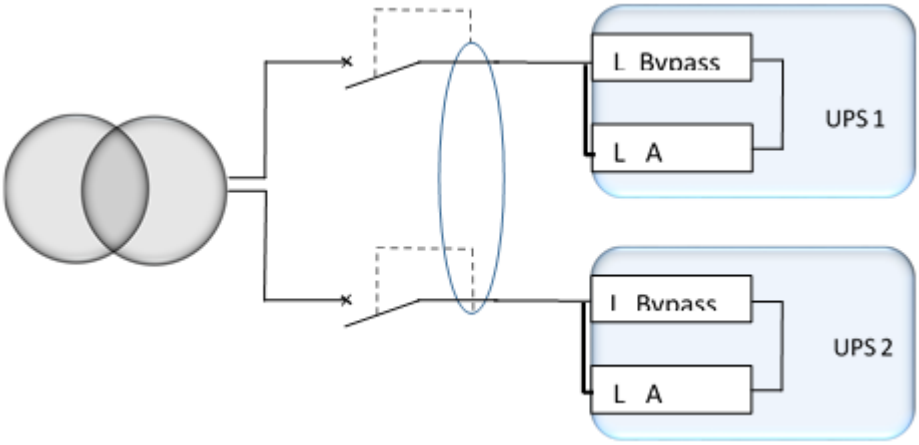

If a separate RCD is required on each of the two incoming supplies, these being Main (A) and Bypass, then:
• The two lines must be isolated
• A common RCD for all UPS main supplies (A) and a common RCD for all UPS Bypass supplies must be installed.

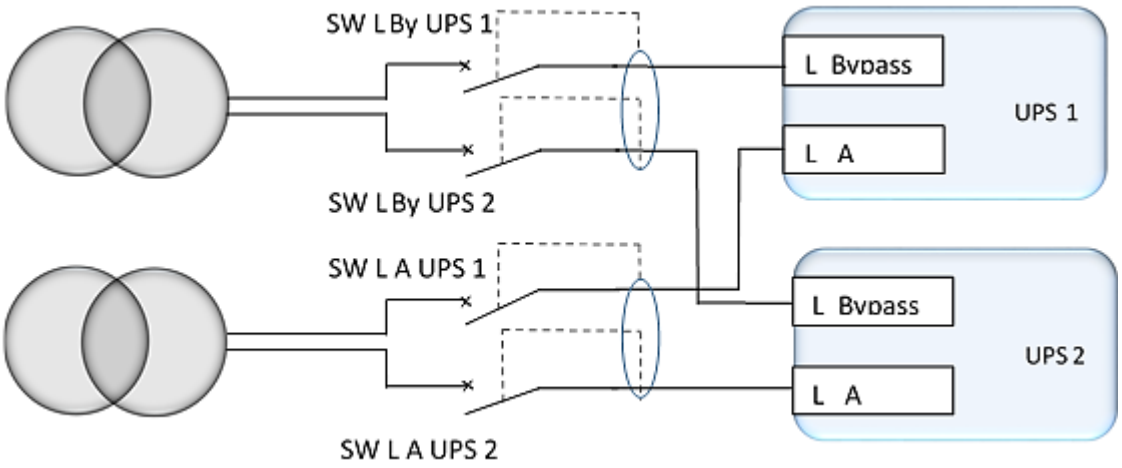

INPUT / OUTPUT AC

Connection to the electrical installation can only be carried out by a **specialised technician**. The first connection to be made is that of the earth conductor.
THE UPS MUST ALWAYS OPERATE WITH A GROUND CONNECTION

Carefully read the "*AC Input*" "*Neutral Conductor* " "*Selectivity*" sections of the "NXE SINGLE CONFIGURATION" chapter, for all safety device related information. Read the Installation Drawing Installation Manual, supplied with the UPS, containing all the information required to connect the units to the electrical system.

To enable the correct distribution of the current, during operation on the bypass supply:
• The sum of the cable lengths from the bypass supply input source to the individual unit and from the individual unit output to the parallel connection point to the load, must be the same for all units in parallel.

LB+Loutput UPS1 = LB+Loutput UPS2 = LB+Loutput UPS3

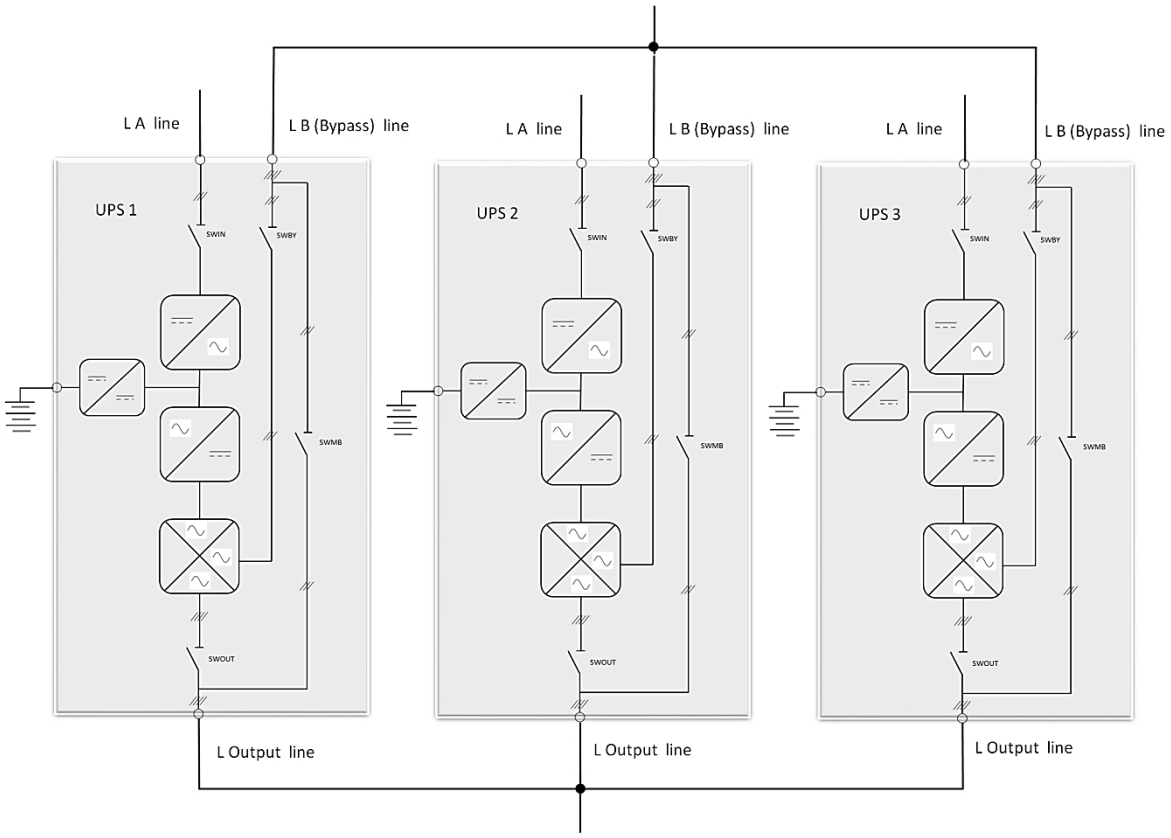

MANUAL BYPASS AND EXTERNAL AUXILIARY SWITCHES

The installation of an external bypass cabinet enables the system to be completely isolated in order to make it easier for any planned maintenance operations.
This configuration also enables the complete removal of a single unit whilst the connected load remains protected by the remaining operational UPS.

The installation of an external bypass cabinet is mandatory when the rated power to the load is greater than the rated power of the single UPS.

> WARNING: When the rated power to the load is greater than the nominal power of a single UPS, the internal manual bypass switch (SWMB) must be prevented from being operated. Remove the handle or prevent the operation via a padlock

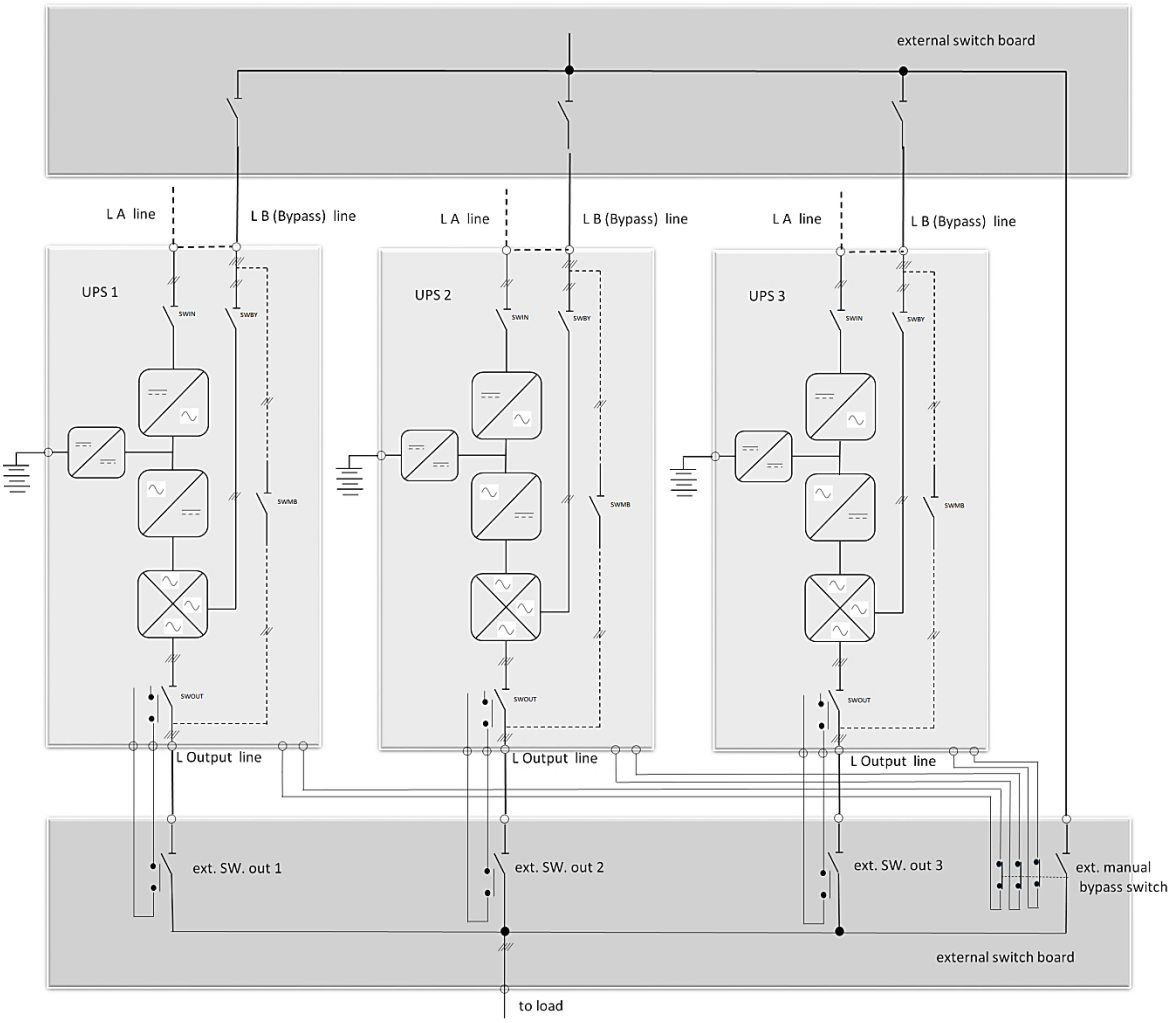

For more details and the positions of these terminals see chapter "NXE SINGLE CONFIGURATION" and “Manual Bypass and External Auxiliary Switches”.

EMERGENCY POWER OFF (EPO)

In the case of a parallel system installation, the EPO command must be sent simultaneously to all of the units as shown in the following figure.

The button must be equipped with the same number of contacts as there are UPS in parallel. Each UPS MUST be supplied with its own set of contacts.
On each UPS, the jumper must be removed from the EPO terminals, which can then be terminated to the respective contacts within the EPO push button.
The contacts provided must be Normally Closed and be opened when the button is pressed.
The removal of the jumper from the connector will cause the UPS to shut down and disconnect the power being supplied to the load. The connection must be made with the UPS switched off.

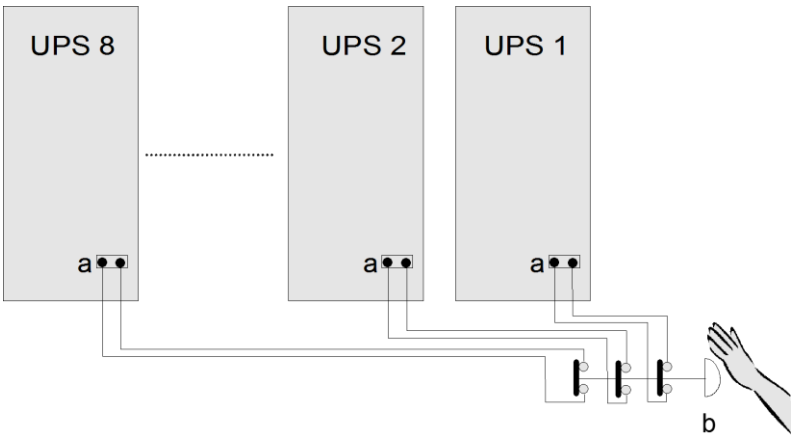

For more details and the position of the terminals see chapter "NXE SINGLE CONFIGURATION" and "*Emergency Power Off EPO*"

CONNECTION TO THE DC INPUT - BATTERY

All of the information contained within the section "Connection to the DC Input" of the chapter "NXE SINGLE CONFIGURATION" remains unchanged.

PARALLEL SIGNAL CONNECTION

Firmware UPDATE
All UPS connected in parallel must have the same version of firmware. In the case of an existing system expansion, check that the system has the same version of firmware as the new UPS being installed.

The signal connection of the UPS connected in parallel utilises a closed loop system, therefore an interruption of the connection ring at any point, due to failure or maintenance, will not affect the operation of the system and will continue to operate normally. The ring connection between the UPS is made via the "Parallel RJ45" card using the Ethernet cable supplied with the UPS. The card is located within the communications area of the UPS.
For the position details see the Chapter “REMOTE CONNECTIVITY” fig: *“Location of I/O signal terminals”*

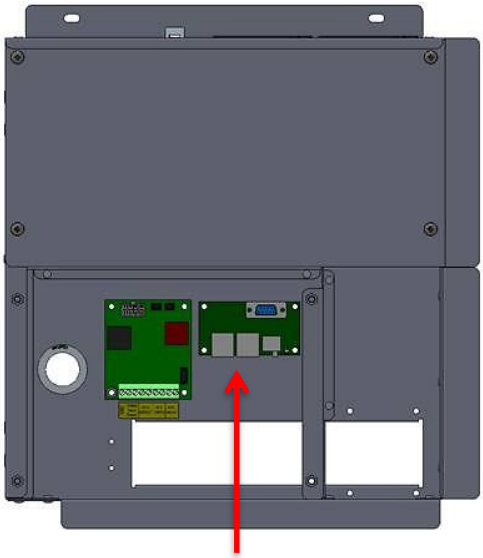

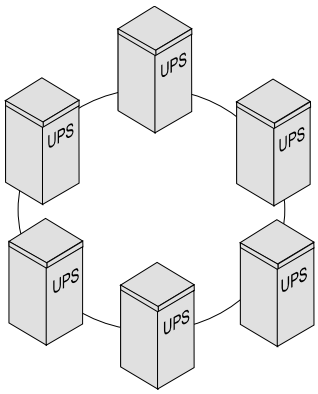

Parallel Card - Signals RJ45-flat-adapter

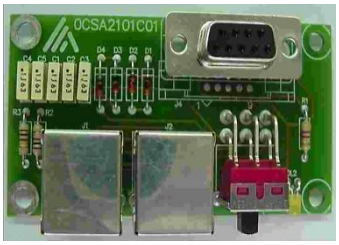

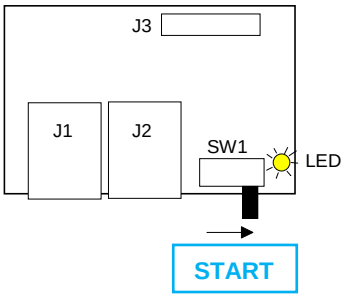

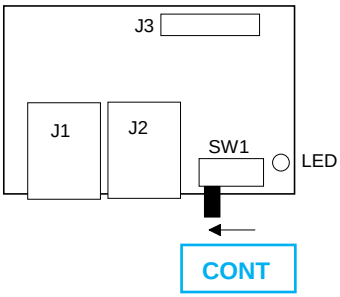

J1 = RJ45 Connector
J2 = RJ45 Connector
SW1 = 2 position switch
Led = Led ON → SW1 in position ***START*** (right position)
Led OFF → SW1 in position ***CONT*** (left position)

The parallel ring connections, shown below, must be performed using the Ethernet cable supplied with the UPS

Single Configuration

Using the NXE in a single configuration but supplied with the parallel option fitted (for future expansion), then:
The Ethernet cable must be connected as a jumper between both RJ45 connectors on the card (J1 and J2) and the SW1 switch must be set to the START position (Led on) As shown below

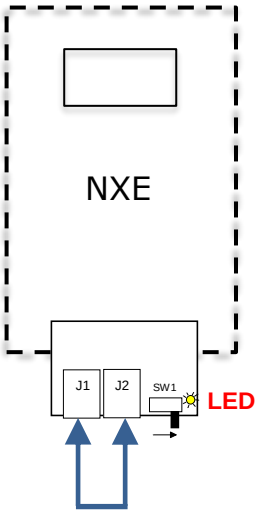

UPSs in parallel

Examples of the connection of 2 or 3 units in parallel are shown below:

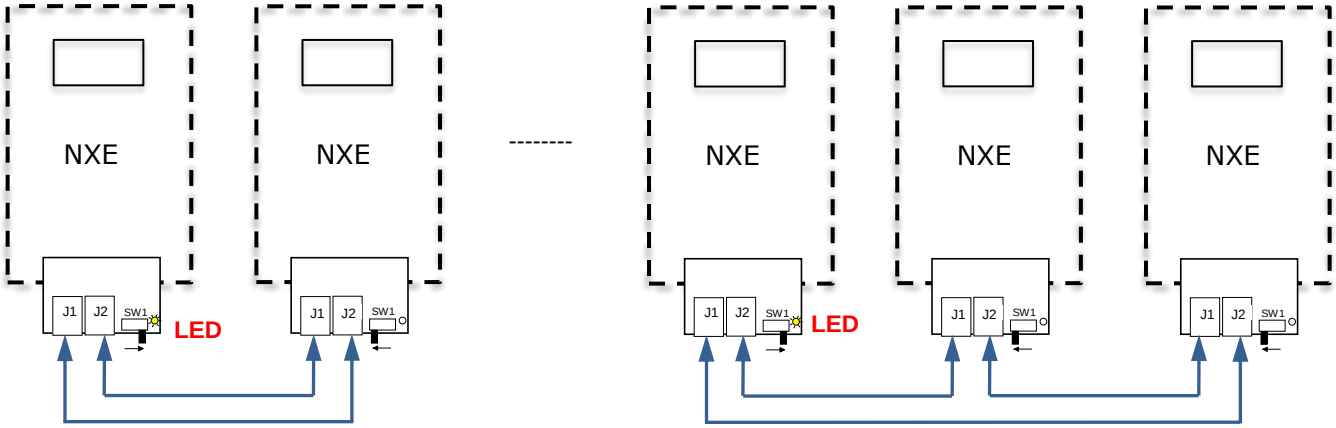

Pay attention to the position of the SW1 switch, the switch must only be set to the START position (Led on) on one of the UPS, all of the other units must have the SW1 switch in the CONT position (Led off).

> If there is a requirement to turn off a UPS in parallel for maintenance or for any other reason, the parallel connection is not to be removed.

Failure of the parallel signal cable

If one of the closed ring connection cables is interrupted, the system will continue to operate as normal without effecting the connected load; in this case the UPS will display the "Parallel Cable Fault" and "INTERNAL FAULT 10" alarm on the display.

If a second closed loop connection cable is interrupted, those UPS no longer communicating with the MASTER via the parallel signal will automatically turn off and the load will remain shared between the UPS which are still connected to the MASTER.

STARTING PROCEDURE

Before proceeding with the system start-up, carefully check all of the UPS power and signal connections to ensure that they are correct and secure.

SINGLE UNIT VERIFICATION

For each of the UPS within the system, follow the steps below by acting upon each UPS in turn.
At this stage pay attention to:

- Do not supply the load
- Keep all of the internal switches of the UPS not under test in the “open” position
- For each UPS, configure the battery capacity as required by the procedure

Battery Capacity

It is important to enter the correct battery capacity value; this value is used by the system control to set the charging current and for the calculation of the autonomy time.
By default, the capacity is set to a value equal to the power of the UPS.
For example, a 300kVA UPS by default is set to 300Ah

Please perform the following steps in sequence

1- Make sure that all switches and the battery system switches of the UPS, including external load switches, are “open”

2- **Close** the power switches located upstream of the UPS

3- **Close** the input switches **SWIN** and **SWBY**

4- **Close** the output switch **SWOUT**

5- The UPS will automatically activate the following operations
   - DC-BUS pre-charge
   - Start of rectifier
   - Output powered from bypass line
   - Start of inverter
   - Output powered from inverter line
   - The display takes approximately 30 seconds to be fully operational

6- Configure the battery capacity (see "*Display Manual*"). Read the warning below

7- **Close** the **SWBATT** switch in the battery cabinet

Once the correct operation of the unit has been verified, open all of the previously closed internal switches and the external battery switch. Then repeat this test on the next unit.

Once each individual unit has been checked, the next step is the parallel system verification.

VERIFICATION OF THE PARALLEL SYSTEM

Perform the following steps in sequence:

1- Make sure that all the UPS switches and battery switches, including any external load switches are “open”

2- **Close** the **SWIN** and **SWBY** switches of unit No. 1 (first unit to be turned on)

3- **Close** the output switch **SWOUT** of unit No. 1

4- Wait until the output is powered (monitor via the display)

5- **Close** the **SWOUT** switch of unit No.2, after a few seconds close the **SWIN** and **SWBY** switches.

6- Check the activation of unit No. 2 and confirm that the load is being supplied by the inverter, confirm that no synchronisation alarm messages are being displayed

7- Repeat the operation of steps 4-5 for all other units within the parallel system

8- **Open** all the internal switches within all the units

VERIFICATION OF THE MANUAL BAYPSS CIRCUIT AND SYSTEM INTERLOCKS.

Confirm which manual bypass circuit is available (see section "Manual bypass and external auxiliary switches").
If the internal SWMB switches can’t be operated, verify that they can’t be activated.
In this case, the actions described herein will be related to the external manual bypass device.
Otherwise (if the internal SWMB switches are available), the actions below will be repeated for each of the Unit switches. Closing the next one after opening the previous one

1. **Close** the Manual Bypass switch **SWMB**
2. **Close** switches **SWOUT SWBY SWIN** and, if present, the external output switch of Unit No. 1
3. Confirm that the output is powered via the static bypass line whilst the inverter remains off. The display will show the message “MANUAL BYPASS CLOSED”
4. **Open** the internal switch **SWOUT** and confirm that the inverter powers on whilst the message “MANUAL BYPASS CLOSED” remains on the display
5. **Close** the **SWOUT** switch and confirm that the inverter powers off . If present and connected, open the external output Switch from Unit No.1 and confirm that the inverter powers on
6. **Open** all internal and external switches from Unit No.1
7. Repeat these tests for all units within the parallel system
8. Open the **SWMB** switch

SYSTEM ACTIVATION

1. Start all the UPS by closing the **SWIN, SWBY, SWOUT** switches and, if present, the external output switches for all of the units within the parallel system
2. Wait for all the units to power up and supply power to the load from the inverter
3. **Close** all the external Battery switches **SWBATT**
4. Wait for the "NORMAL OPERATION" message to be displayed on all UPS display panels (see "*Display Manual*").
5. Close all the load switches
6. Confirm that the output current sharing between all the operational units is within 2% of the average (total current divided the number of UPS)

BATTERY MODE CHECKING

At the end of the installation, it is recommended to perform a mains failure simulation to check for the correct operation of the UPS on battery, even for a few moments, as the battery may not be fully charged.
At first, it is recommended to test the individual UPS, one at a time, by opening the individual SWIN input switches, taking care to verify the correct operation before re-closing the switch.
Once each UPS has been tested, a total mains failure can be simulated by opening the main input switch upstream of the UPS and then confirm that the load remains powered.
When the main power switch is re-closed, the units will return to normal operation and begin to charge the batteries.

Battery Autonomy

Before performing a full battery discharge test, allow the UPS to charge for at least 8-10 hours (check the battery characteristics and charge current).
At first discharge, the obtained autonomy may be slightly lower than the expected time, some charge and discharge cycles will be required in order to improve this value. In fact, battery capacity is not a constant value over time, therefore it will increase initially over several charge and discharge cycles. Then remain constant for a few hundred cycles and then slowly reduce over time.

MAINTENANCE OF A SINGLE UNIT

Maintenance on a single unit can be performed whilst the load is UPS supported only if the system is redundant, that is, with at least 1 unit switched off, the sum of the total power available from the remaining active UPS, is greater than the rated loads.

DO NOT CLOSE SWMB

- By opening the SWOUT switch, the UPS is disconnected from the output common connection bar.
- By opening the SWIN, SWBY and any external battery switch SWBATT of the UPS that are switched off, the equipment is disconnected from all the power sources, therefore it is possible to access the insulated internal parts for maintenance, by considering the following warnings.

The input and output terminals will remain live with dangerous voltages present.

Access to the internal parts for maintenance must only be performed by trained and authorised service personnel (**Specialised Technician)**.

After performing the operations as shown above, the **Specialised Technician** must wait at least ten minutes before accessing the internal assemblies within the UPS so that the capacitors can discharge. Be careful, however:
The input and output terminals will remain live with dangerous voltages present.

To return the UPS to Normal Operation, following the maintenance and after replacing all the previously removed panels :

1. Close the **SWIN and SWBY** switches
2. Wait for the UPS to start, confirm via the display panel
3. **Close** the external battery switch **SWBATT**
4. **Close** the output switch **SWOUT**
5. Wait for the display to show "NORMAL OPERATION" (see details in "display manual")

MAINTENANCE OF THE SYSTEM

If the system is not "redundant" or maintenance is required to be performed on the whole system, follow the manual bypass procedure described below.

MANUAL BYPASS PROCEDURE

In manual bypass mode, the load is powered by the Bypass line, therefore the UPS is not available to support the load should a mains supply failure occur.
This mode is normally used to perform maintenance within the UPS. The maintenance activity must only be performed by trained and authorised service personnel (**Specialised Technician**).

The following operations require special attention! First of all determine if an external manual bypass switch is installed, or if the internal manual bypass switches are available.
See "manual bypass and external auxiliary switches" in this chapter.

EXTERNAL MANUAL BYPASS

1- On one of the UPS display panels, transfer the load onto the static bypass line (refer to the Display Manual in the COMMANDS menu section)

2- The UPS will simultaneously command all the other UPS to switch over to their Bypass lines and the inverters will be turned off.

3- Confirm that the entire system has transferred to the bypass line

4- **Close** the EXTERNAL MANUAL BYPASS switch

5- **Open SWIN**, **SWBY** and **SWOUT** switches on each of the units

6- **Open** the external battery switches **SWBATT** on each of the units

7- If the system is equipped with individual external UPS switches or a general output switch, it is possible to completely isolate the UPS by opening the external power switches upstream of the UPS and all external output switches. Otherwise, there will be dangerous voltage at the input / output terminals of the equipment.

INTERNAL MANUAL BYPASS

Internal Manual Bypass switches (SWMB) can only be used if the total rated load is less than the rated power of a single UPS!

1- On one of the UPS display panels, transfer the load onto the static bypass line (refer to the Display Manual in the COMMANDS menu section)

2- The UPS will simultaneously command all the other UPS to switch over to their Bypass lines and the inverters will be turned off.

3- Confirm that the entire system has transferred to the bypass line

4- **Close** the manual bypass switch **SWMB** on all the units within the system.

5- **Open SWIN**, **SWBY** and **SWOUT** switches on each of the units

6- **Open** the external battery switches **SWBATT** on each of the units

Warning: the input and output terminals will remain live with dangerous voltages present.

RE-STARTING THE UPS SYSTEM

To return the UPS to Normal Operation, following the maintenance and after replacing all the previously removed panels :

1- **Close** the **SWBY** switches on all the units in the system
2- Wait for the bypass line to become available in all the UPS in the system (check the display).
3- **Close** the **SWOUT** switch on all the units (also close the external output switches if installed)
4- Verify on the display that the static bypass lines are active and providing power to the connected load
5- **Open** the internal **SWMB** switches of all the units (or the external manual bypass switch)
6- **Close** the **SWIN** switch in all the units.
7- Wait for the load to be transferred from the bypass to the inverter line (Verify on the display of all the units)
8- **Close** all the external battery **switches SWBAT**.
9- Wait for the display (of all the units) to show "NORMAL OPERATION" (see details on "*display manual*")

SYSTEM SHUTDOWN PROCEDURE

By performing the following actions, power to the connected load will be switched off and the UPS will also be completely switched off.

1- **Open** all the external switches to the loads
2- **Open** the internal output switches **SWOUT** of all the units and the external output switches, if installed.
3- **Open** the input internal switches **SWIN** and **SWBY** of all the units
4- **Open** all the external battery switches **SWBAT**
5- **Open** all the upstream switches supplying the input lines, to insulate the UPS completely

The loads are no longer powered, and after a few seconds the displays will also turned off.
Check with a multimeter that there are no voltages on the Input / Output terminals.

Wait at least 10 minutes before accessing the internal parts

REMOVAL AND INSERTION OF A UNIT DURING UPS OPERATION

Warning! This procedure can be performed if the installation is configured to enable the complete disconnection of a single UPS from the system. Each of the UPS must have its own external input and output isolation switches.
See *"Manual Bypass and external Auxiliary Switches"* section.

Warning! This procedure can only be performed on operational UPS if the system is redundant, that is, with at least 1 unit turned off, the sum of nominal power available from the remaining active UPS, is greater than the rated power of the load. Otherwise, the load must be transferred onto the bypass line.

This procedure must only be performed by trained and authorised personnel (**Specialized Technician**).

Once the equipment has been isolated, opening SWOUT, SWIN, SWBY, external switch SWBAT, the external output switch and the upstream external switches, WAIT AT LEAST 10 MINUTES before accessing the internal assemblies within the unit.

Firmware UPDATE

All the UPSs connected in parallel must have the same version of firmware.
In the case of an existing system expansion, check that the system has the same version of firmware as the new UPS being installed.

With the above conditions, the unit can be completely removed from the parallel system whilst the load remains supported by the remaining operational units.

"HOT" REMOVAL EXAMPLE

Perform the following steps in sequence:

1- **Open** the internal output switch **SWOUT** and the external output switch for the unit being removed.
2- **Open** the internal **SWIN** and **SWBY** switches
3- **Open** the external battery switch **SWBAT**
4- **Open** the external input supply switches related to the unit.

Wait at least 10 minutes before accessing any internal parts

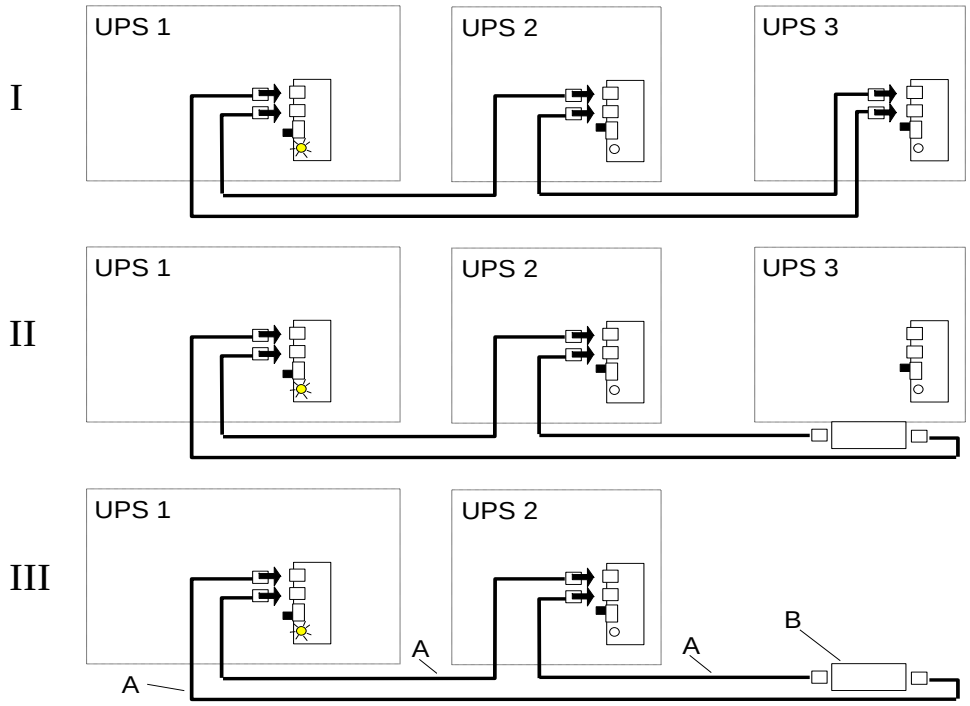

5- Disconnect the parallel signal cables from the “Parallel RJ45 card” (A)

6- Connect the cables together using an RJ45 female/female adapter (B)

7- Now it is possible to disconnect the power cables and remove the unit.

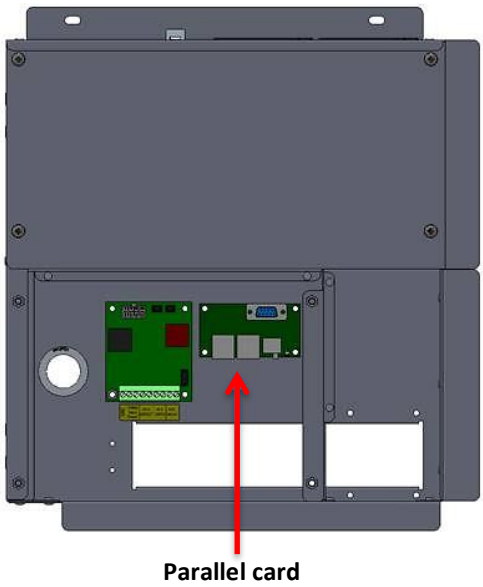

NOTE :

- *The RJ45 parallel card is accessible by removing the front panel, without accessing hazardous voltage parts.*
- *In the parallel system only one unit must have SW1” in the START position on the “parallel RJ45 card, and the led on*
- *If the unit to be removed has SW1 in START position, it is necessary to switch any one of the other UPSs card devices on START*
- *After the UPS has been removed, check that all the UPSs operate normally, and verify that the system shares the power correctly*

"HOT" INSERTION EXAMPLE

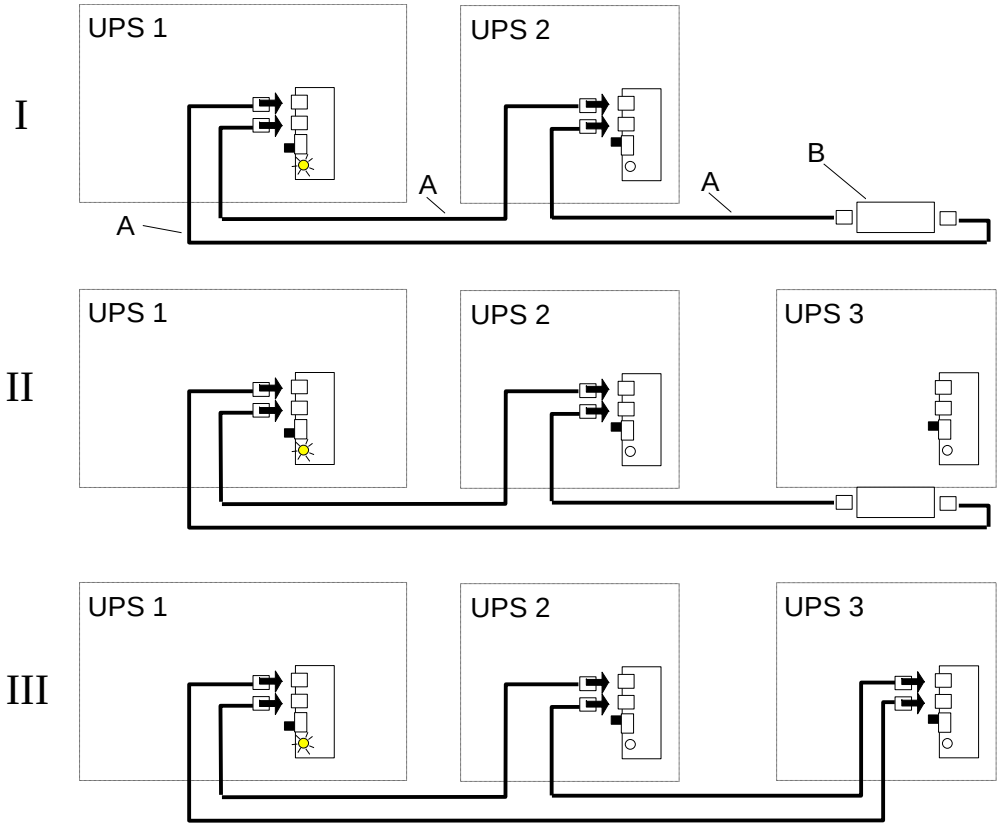

Connection sequence for the parallel signal cables, if the unit is already positioned and connected to the system but **still fully isolated** from the input, battery and output power:

1- Remove the female/female RJ45 adapter (B)

2- Connect the signal cables to the "parallel RJ card" within the UPS being inserted

With the UPS completely off, proceed with the following start-up sequence

3- **Close** the external input power supply switches

4- **Close** the internal **SWIN** and **SWBY** switches

5- Wait for a few moments while the UPS and the display run through the first start-up procedure

6- **Close** the external battery switch **SWBAT**

7- **Close** the internal **SWOUT** switch and the external output switch related to the unit

8- Confirm that the display shows "*NORMAL OPERATION"* (see the "display manual" for details)

9- Confirm that all operational UPS are equally sharing the load

NOTE :

- *In the parallel UPS system, only one UPS must have the SW1 switch of the "Parallel RJ45" card in the START position and the LED on*

MAINTENANCE

The NXE UPS is designed and manufactured for long life even in the worst service conditions.
It should be noted, however, that these are electrical equipment and as such they need to be periodically checked and inspected.
In addition, some components have a finite lifespan, so they must be periodically checked and, in some cases, replaced as necessary based upon the operational environment.
The most critical components are the fans, electrolytic capacitors and batteries.
It is therefore recommended to implement a preventive maintenance program, which should be entrusted to specialised personnel who are authorised by the manufacturer.
The Service Assistance Company is at your disposal to offer you the various personalised preventive maintenance options.

Periodic operations (to be carried out by a trained operator with doors closed)

Periodically (more frequently in poor environmental and operating conditions), perform the following operations with the doors closed:

- Check that the inlet and outlet grilles are clean and free of dust or other material. If cleaning is required DO NOT ATTEMPT this task with the unit running (DO NOT insert objects into the grilles, THE FANS ARE ACTIVE). Internal maintenance is required. See the next section.
- Check that all fans are working correctly without any noise or abnormal vibration. Confirm that the display panel is not showing the no fans message alarm.
- Ensure that the UPS is working properly with no alarms present on the display. If there is an alarm message, check the meaning in the “display manual” and, in case, contact the Service Assistance Company
- Perform a battery test using the specific display function (see “display manual”) to verify the correct operation and the actual autonomy of the batteries.

Maintenance inside the UPS (Specialized Technician only- trained personnel)

Maintenance within the UPS must only be performed by trained and authorised personnel (**Specialised Technician**). The NXE UPS is designed to power the load even when it is disconnected from the input mains supply and from the battery, via the Manual Bypass.
WARNING: there are High Voltages inside the UPS even when the input power and batteries have been disconnected

After performing the manual bypass procedure (see the relevant paragraphs in the previous chapters) wait at least 10 minutes before accessing the internal parts to allow the capacitors to discharge. Always, check with a multimeter first configured in DC and then AC, that there are no residual voltages before accessing the parts.
WARNING: there are dangerous voltages on the input and output terminals

Ordinary battery maintenance

The system automatically checks the battery efficiency and provides an alarm when it finds a lower efficiency than the calculated value, based on the configured capacity value.
Battery life is related to the operating temperature and the number of charge and discharge cycles performed.
Capacity is not constant, it increases after a few charge and discharge cycles; it stays constant for several hundred cycles and then declines steadily.

Preventive maintenance of the batteries includes:

- Ensure the operating temperature is maintained within the range 20-25°C
- During the first month of use, carry out 2/3 charge and discharge cycles
- After the first month of use, perform the operation every six months

Opening the battery switch does not remove the voltage from inside the battery compartment, as the batteries are a source of energy (always live).
BATTERY TERMINALS ALWAYS HAVE DANGEROUS VOLTAGES PRESENT.
If there is a suspicion that the batteries are defective contact the service assistance company.

Battery replacement must be carried out by a **Specialised Technician**.
For the disposal of the replaced items consult the LOCAL STANDARDS for disposal and recycling. Batteries are legally classified as "toxic waste".

BATTERY TEST

By factory default, the BATTERY TEST runs automatically every day at 8:00 AM, if preferred the configuration of this test can be changed to suit the installation in terms of day and time of the test or disable it completely.

The "Display Manual" also describes how to change the duration of the test and how to manually activate a BATTERY TEST cycle.

In the standard settings, the Battery Test has a duration of 8 seconds. The test cycle is performed by lowering the rectifier DC output voltage at which point load is supported by the batteries.

This test method enables the UPS to accurately estimate the battery status in real time.

At the end of the daily test, if the measured battery voltage (Vbat) is lower than the calculated value (depending on the estimated charge status and the discharge current), an alarm will be issued, with a subsequent decrease in the charge value (Ah%) and in autonomy (minutes); In this case, after 60 seconds, a new test will be performed. If the test result is positive, in accordance with the new charge level previously set, the alarm (battery low) will be disappear and the charger will run adapting to the detected status of the battery. Otherwise, another test will be activated after 60 seconds, at the end of which, in case of a negative result, the alarm will be permanently displayed, until the next test on the following day.

The PERMANENT presence of the alarm “battery low” implies one of the following situations:

- The battery is no longer efficient
- The battery switch is open.
- The battery cabinet fuse is blown
- The internal battery fuse is blown

TECHNICAL DATA

Electrical Data	UPS Size (kVA)	
	250	**300**
Input Mains		
Rated Voltage	400 Vac 3Ph Without Neutral	
Rated Voltage tolerance without battery sharing, according with load rate	+20%, -10% (100% load) +20%, -20% (85% load) +20%, -30% (75% load) +20%, -40% (65% load)	
Rated Frequency [Hz]	50/60 Hz	
Input Frequency tolerance	From 45 to 65 Hz	
Rated Current absorbed at rated Voltage [A]	380	458
Rated Power absorbed at rated Voltage [KVA]	264	317
Max Current absorbed at full load and battery in recharge [A]	500	500
Input Power Factor with 10÷100% load (THDV< 1%)	>0.99	
Current Harmonic distortion (THDi) With main THDV < 1% • Load 100% • Load 75% • Load 50% • Load 25 %	 < 3% < 3% < 5% < 8%	
Progressive input start power of rectifier (**Power Walk-in Duration**)	From 0 to 120 second (Configurable)	
Delay at progressive start of rectifier (**Power Walk-in Start delay**)	From 0 to 120 second (Configurable)	

Electrical data	UPS Size (kVA)	
	250	300
D.C. INTERMEDIATE CIRCUIT		
Number of lead cells (battery blocks) (see note 1)	240 (40 blocks 12V rated)	
Rated Battery Voltage [Vdc]	480	
Ripple current with recharged battery [%]	Approx 0	
Floating voltage 2.26 V/el. (can be calibrated) [Vdc]	542	
Recharging Voltage 2.4 V/el. (can be calibrated) [Vdc]	576	
Maximum DC output voltage [Vdc]	600	
End of discharge voltage 1.6 V/el (can be calibrated) [Vdc]	384	
Voltage Compensation with reference to the battery cabinet temperature [V per °C]	-0.11%	
Maximum current to charge battery with 240 cells (mains Voltage at 400 Vac) [A] • Load 100% • Load 90% • Load 80% • Load ≤ 70%	 60 105 150 200	 75 125 185 225

Electrical Data	UPS Size (kVA)	
	250	**300**
INVERTER		
Rated Power [kVA]	250	300
Rated Active Power [kW]	250	300
Rated current (at 400 V) [A]	361	433
Rated voltage	400 V 3Ph + N (configurable from 360V to 420V)	
Rated Frequency	50 or 60 Hz (configurable on site)	
Static Variation	± 1 %	
Dynamic Variation	± 5 %	
Recovery time within ± 1%	20ms (according to EN 62040-3, class 1)	
Crest current Factor (as per EN 62040-3)	3:1	
Voltage distortion with linear load	≤ 1% (typical), ≤ 2% (max)	
Voltage distortion with non linear load (as per EN62040-3)	≤ 3 %	
Frequency Stability with the inverter **synchronised** to the bypass line	± 2 % (configurable from ± 1 % to ± 6% by display function)	
Frequency Stability with the inverter **not synchronised** to the bypass line	± 0.05 %	
Speed of frequency variation	1 Hz/sec (see note 2)	
Phase voltages deviation with balanced or unbalanced load	≤ 1 %	
Angle phase shift with balanced or unbalanced load	120 ± 1 °el	
Transient Overload–time as function of power overload- • Load 110% • Load 125% • Load 150%	 1 hour 10 minutes 1 minute	
Short Circuit current (I/I Rated)	3.2 for100 mSec 2.4 for1 Sec.	2.7 for 100 mSec 2 for 1 Sec.
Battery Mode efficiency (100% Load)	96 %	

Electrical Date	UPS Size (kVA)	
	250	**300**
BYPASS LINE		
Rated Voltage	400 Vac 3ph + N (configurable from 360 to 420 Vac)	
Rated Voltage tolerance	± 20 % (configurable from ± 5 % to ± 25 %)	
Rated Frequency	50 or 60 Hz (auto sensing)	
Frequency tolerance	± 2 % (configurable from ±1% to ±6 %)	
Transfer time on bypass line with inverter synchronized (UPS in "Normal Mode")	< 1 ms	
Transfer time on bypass line with inverter not synchronized (UPS in "Normal Mode")	100 ms (configurable for longer time)	
Transfer time from Bypass to Inverter (UPS in "Eco-mode")	4 ms	
Power overload capacity (referred to rated power)	110 % for 60 minutes 125 % for 10 minutes 150 % for 1 minute	
Current Overload capacity (x rated current) • 1 second • 500 ms • 200 ms • 100 ms • 10 ms	 12 14 15 16 18	 10 12 13 14 15
I^2t Internal protection (prearcing 1 ms) [KA]	180	

Electrical Data	UPS Size (kVA)	
	250	**300**
SYSTEM		
Rated Conditional Short Circuit Current "Icc" [KA]	40	
Leakage current	300 mA	
Dissipated Power **No load** • [kW] • [kcal/h] • [BTU/h] (see note 3)	1.5 1290 5118	1.5 1290 5118
Dissipated Power **100% load, max battery recharge current** ("On-Line" operation) • [kW] • [kcal/h] • [BTU/h] (see note 3)	10.1 8724 34619	13.5 11590 45994
Acustical Noise level at 1m from the front 100% load [dbA]	70	70

Notes :

(1) The number of Pb elements can vary from 222 to 258

(2) The parallel version can be calibrated from 0.1 to 1Hz/s

(3) 3.97 BTU = 1kcal.

ANNEX A

CONFIGURABLE ALARMS AND COMMANDS

The Service personnel can program both external commands and alarm relays in a different way with respect to the standard configuration. The available options are as follows:

ALARMS

- DISTURBANCES ON BYPASS LINE
- MANUAL BYPASS, SWMB ON
- BYPASS LINE VOLT. FAIL OR SWBY, FSCR OFF
- MAIN LINE VOLTAGE FAIL OR SWIN OFF
- PREALARM, LOW BATTERY VOLTAGE
- LOW BATTERY CHARGE OR CLOSE SWB
- LOW INPUT VOLTAGE OR OUTPUT OVERLOAD [W]
- OUTPUT OVERLOAD
- BYPASS FOR OUTPUT POWER “VA” < AUTO-OFF VALUE
- INTERNAL FAULT: number xxx * (see the table on next page)
- TEMPORARY BYPASS, WAIT
- BYPASS FOR OUTPUT OVERLOAD
- BYPASS COMMAND ACTIVE (8= OFF)
- REMOTE BYPASS COMMAND ACTIVE (8=OFF)
- OVERTEMPERATURE or FAN FAILURE
- INPUT VOLTAGE SEQUENCE NOT OK
- OUTPUT OFF, CLOSE SWOUT OR SWMB
- BLOCK COMMAND ACTIVE (8=OFF)
- REMOTE BLOCKING COMMAND ACTIVE (8=OFF)
- MEMORY CHANGED: CODE = number
- AUTO-OFF Timer: Toff= 0: 0', Ton= 0: 0'

See “Display Manual” for details.

INTERNAL FAULT TABLE

AI = n.	Alarm message (English)	Note
101	" INTERNAL FAULT: 1 "	Input stage pre-charging fault
102	" INTERNAL FAULT: 2 "	Inverter stage fault
103	" INTERNAL FAULT: 3 "	Inverter output contactor/switch fault
104	" INTERNAL FAULT: 4 "	Input converter stage fault
105	" INTERNAL FAULT: 5 "	Bypass line static switch fault
106	" INTERNAL FAULT: 6 "	Input contactor fault
107	" INTERNAL FAULT: 7 "	Main cards power supply fault
108	" INTERNAL FAULT: 8 "	Input current balancing fault
109	" INTERNAL FAULT: 9 "	Battery contactor fault
110	" INTERNAL FAULT: 10 "	Parallel signals fault
111	" INTERNAL FAULT: 11 "	Return to inverter from bypass fault
112	" INTERNAL FAULT: 12 "	Can-bus, transmission fault
113	" INTERNAL FAULT: 13 "	Can-bus, inverter stage receiving fault
114	" INTERNAL FAULT: 14 "	Can-bus, input stage receiving fault
115	" INTERNAL FAULT: 15 "	Can-bus, exp. Card 1 receiving fault
116	" INTERNAL FAULT: 16 "	Can-bus, exp. Card 2 receiving fault
117	" INTERNAL FAULT: 17 "	Can-bus, exp. Card 3 receiving fault
118	– Not used -	
119	" INTERNAL FAULT: 19 "	SWOUT aux. contact, fault
120	– Not used -	
121	" INTERNAL FAULT: 21 "	Parallel output current unbalancing fault
122	" INTERNAL FAULT: 22 "	Parallel slave firmware not match Master
123	" INTERNAL FAULT: 23 "	Slave output phases num. not match Master
124	" INTERNAL FAULT: 24 "	Parallel signals transmit. on master, fault
125	" INTERNAL FAULT: 25 "	Ups previous started as parallel
126	" INTERNAL FAULT: 26 "	Switching from inverter to bypass fault
127	" INTERNAL FAULT: 27 "	Power supply card from bypass, fault
128	– Not used -	
129	" INTERNAL FAULT: 29 "	Can-bus, received. signal from DSP card fault
130	" INTERNAL FAULT: 30 "	One temperature sensor not connect
131	" INTERNAL FAULT: 31 "	System card oscillator fail
132	– Not used -	
133	– Not used -	
134	– Not used -	
135	" INTERNAL FAULT: 35 "	Redundancy lost in parallel system
136	" INTERNAL FAULT: 36 "	Slave ups locked by the rectifier off
137	" INTERNAL FAULT: 37 "	Output voltage error
137..200	- Not used -	Cristal Fault on system card
201	" MEMORY CHANGED: 1 "	System firmware updated
202	" MEMORY CHANGED: 2 "	Custom data updated
203	" MEMORY CHANGED: 3 "	Auxiliary data updated
204	" MEMORY CHANGED: 4 "	Service data updated
205..210		
211	" MEMORY CHANGED: 11 "	Events memory erased
212..255	- Not used -	

COMMANDS:

NAME	FUNCTION DESCRIPION	TYPICAL APPLICATION
Battery charge inhibition	Disables the recharging of the battery, keeping the recharge current at a minimum value, independently of the load. *This is performed by a dry closed contact; When the contact is re-opened, the command is deactivated*	When a generator is installed, this allows its output power to be used only to supply the load and not to also recharge the battery.
Inhibition of synchronization with bypass line	Disables the bypass line to supply the load and the synchronisation of the inverter. In the event of an overload or inverter fault, the UPS will turn off and the power to the connected load will be switched off. *This is performed by a dry closed contact; When the contact is re-opened, the command is deactivated.*	When a generator is installed, this prevents the UPS switching to bypass, and de-synchronises the inverter due to the generator supply being unstable.
Battery switch alarms	Activates a battery switch open alarm. It indicate the opening of a battery switch located external to the UPS. *A normally closed dry contact must be provided when the external switch is opened.*	Displays the status of an external the battery switch
Standby ON	Forces the UPS to run in Standby-ON mode *This is performed by a dry closed contact; When the contact is re-opened, the command is deactivated.*	To be used when the load can tolerate mains supply interference or frequency variations and it is thus preferred to improve the system efficiency. The load will be powered by the inverter during a mains failure.
Battery test (1)	Starts the automatic battery test when the UPS is in normal operation. Any battery test underway will be terminated immediately. *This is achieved by switching a dry contact from open to closed.*	Checks the battery status
Battery test (2)	Starts the manual battery test that continues until a stop command is received or until the full discharge of the battery. Terminates any manual battery test underway. *This is achieved by switching a dry contact from open to closed.*	Checks the battery status. N.B.: During the test, the rectifier remains on reducing its voltage, in order to allow the supply of current by the battery and to prevent inverter shutdown after battery discharge.
Manual Battery Charge	Start the manual battery charge at a set V/cells value	Start a manual battery charge remotely

Activation of block on Bypass	Forces the load on bypass line, by inverter shutdown NOTE: the command is enabled only if the bypass line is within tolerance *This is achieved by switching a dry contact from open to closed.*	The load will remain unpowered in case of bypass line failure To be used for non-critical load
Inhibition of block on bypass	Disables the previous block on bypass *This is achieved by switching a dry contact from open to closed.*	
Inverter ON/OFF	UNCONDITIONAL inverter block command (the command is enabled even if there is no bypass line). The UPS only switches onto bypass only if the bypass line is present (otherwise the load remains unpowered). *This is performed by a dry closed contact; When the contact will be re-opened, the command will be deactivated*	Load unpowered in the event of a bypass line failure. To be used for non-critical loads.
Rectifier off	UNCONDITIONAL rectifier block command. *This is performed by a dry closed contact; When the contact will be re-opened, the command will be deactivated*	Turns off the rectifier (it may cause discharging of battery)

RPS SpA
Viale Europa, 7
37045 Legnago (VR) Italy
www.riello-ups.com

0MNNXEM25RUENUA 07/2017