SENTINEL DUAL

SDL 8000-10000
SDL 6500 TM-8000 TM-10000 TM

RIELLO ELETTRONICA riello ups

SAFETY

GB

This part of the manual contains precautions that must be adhered to strictly since they regard SAFETY.

a) THE UPS MUST NOT OPERATE WITHOUT AN EARTH CONNECTION. The first connection to be carried out is the earth conductor, which has to be connected to the terminal marked ⏚.

b) Avoid connecting the output neutral to the input neutral or to earth as this could cause malfunctions.

c) DANGEROUS electrical voltages are generated inside the UPS. All installation and maintenance operations must be carried out EXCLUSIVELY by authorized personnel.

d) The UPS contains an internal power source: the batteries. The terminals and the output sockets may be powered even when the UPS is not connected to the mains.

e) The total battery voltage can generate an electric shock. Replaced batteries should be considered as TOXIC WASTE and treated as such. Do not throw the battery packs into fire: they may explode. Do not try to open the battery packs: they do not require any maintenance. Furthermore the electrolyte is dangerous if it comes into contact with the skin or the eyes and may be toxic.

f) Do not switch the UPS on if there is any leak of liquid, or if a residual white powder is noted.

g) Do not allow water, liquids in general and/or other foreign bodies to get into the UPS.

h) In the event of dangerous conditions switch the UPS off with the switch located on the front panel and open the magneto-thermal protection installed upstream of the UPS. Isolate the battery by removing the lower part of the front panel and disconnecting the two battery pack connectors.

i) The UPS generates a leakage current of less than 2 mA.
Warning: the leakage current of the load is added to that of the UPS on the earth protection conductor.

j) For battery expansion use exclusively connectors supplied by or authorized by the manufacturers.

k) The UPSs of this series have been designed for professional use and are therefore not suitable for use in a domestic environment.

GB

USER MANUAL

GB

INTRODUCTION

Thanks you for choosing this product of the ***Sentinel Dual*** range.

Riello UPS are renowned specialists in the development and production of uninterruptible power supplies (UPS). The UPS in this range are high quality products, designed and built with care in order to give you the best performance.

This equipment can be installed by anyone, subject to **CAREFULLY AND THOROUGHLY READING THIS MANUAL.**

The manual contains detailed instructions on how to use and install the UPS.
For information on using and getting the best performance from your UPS, this manual should be kept safely in the vicinity of the UPS and CONSULTED BEFORE TAKING ANY ACTION ON THE UPS.

ENVIRONMENTAL PROTECTION

During the development of its products, the company uses extensive resources with regards to all environmental aspects.

All our products pursue the objective defined in the environmental management system developed by the company in compliance with standards in force.

No hazardous materials such as CFC, HCFC or asbestos are used in this product.

When evaluating packaging, the choice of material has been made favouring recyclable materials.
For correct disposal, please separate and identify the type of material of which the packaging is made in the table below. Dispose of all material in compliance with standards in force in the country in which the product is used.

Description	***Material***
Pallet	Heat-treated pine
Packaging corner	Stratocell/cardboard
Box	Cardboard
Adhesive pad	Stratocell
Protective bag	HD Polyethylene

DISPOSING OF THE PRODUCT

The UPS contains internal material that (in case of dismiss / disposal) are considered TOXIC and HAZARDOUS WASTE, such as electronic circuit boards and batteries. Treat these materials according to the laws applicable referring to qualified service personnel. Their proper disposal contributes to respect the environment and human health.

© Reproduction of any part of this manual, including partial, is strictly prohibited without the prior consent of the manufacturer.
For the purpose of improving it, the manufacturer reserves the right to modify the product described herein at any time and without notice.

CONTENTS

PRESENTATION 6

UPS VIEWS 7
BATTERY BOX VIEWS 8
DISPLAY MASK VIEW 9

INSTALLATION 10

OPENING THE PACKAGING AND CHECKING ITS CONTENTS 10
TOWER VERSION 12
RACK VERSION 13
INSTALLATION PROCEDURES 14
CONNECTING THE UPS TO THE BATTERY BOX 15

USE 16

CONNECTIONS 16
8-10kVA single phase version 17
Three phase version 18
Version with external Bypass remote control 19
FIRST START-UP 21
START-UP FROM MAINS 21
START-UP FROM BATTERY 21
UPS SHUTDOWN 21
DISPLAY PANEL INDICATIONS 23
UPS status indicators 23
Measurements display area 24
Single phase version 24
Three phase version 25
Configuration area 26
OPERATING MODES 27
R.E.P.O. 27
PROGRAMMABLE AUXILIARY SOCKET (POWER SHARE) 27
UPS CONFIGURATION 28
COMMUNICATION PORTS 31
RS232 and USB connectors 31
Communication Slot 31
SOFTWARE 32
Monitoring and control software 32
Configuration software 32

TROUBLESHOOTING 34

ALARM CODES 36

TECHNICAL DATA TABLE 38

SINGLE/SINGLE PHASE UPS TECHNICAL DATA TABLE 38
THREE/SINGLE PHASE UPS TECHNICAL DATA TABLE 39
BATTERY BOX TECHNICAL DATA TABLE 40
TABLE OF OVERLOAD TIMES 40

PRESENTATION

The new ***Sentinel Dual*** UPS family has been designed with a special eye to versatility. These UPSs can in fact be installed either in a tower version or in a rack version, according to requirements. The 2 different versions of the product are shown below:

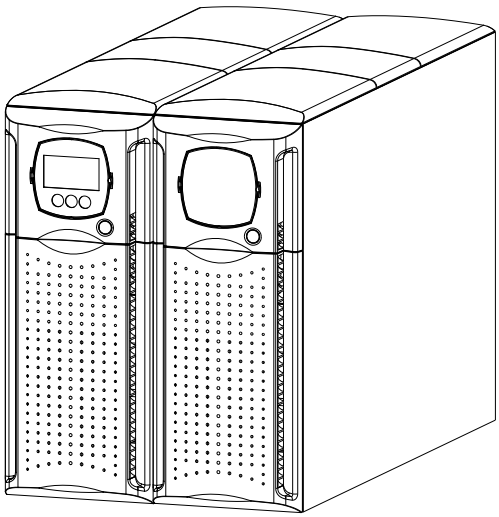

Tower

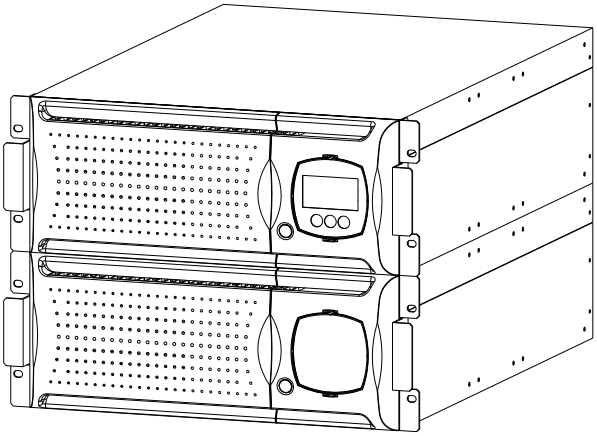

Rack

		SDL 6500 TM	SDL 8000 SDL 8000 TM	SDL 10000 SDL 10000 TM
Nominal power	[VA]	6500	8000	10000
Nominal voltage	[Vac]	220/230/240		
Dimensions H x L x D	[mm]	2 x [455 x 175 x 660] (1)		
Weight	[Kg]	approx 28 + 63	approx 29 + 65	approx 30 + 65

(1) *The H dimension is different in the rack version with handles mounted: 483mm x 175mm x 660mm (H x L x D)*

Note: 175mm = 4U
483mm = 19”

UPS Views

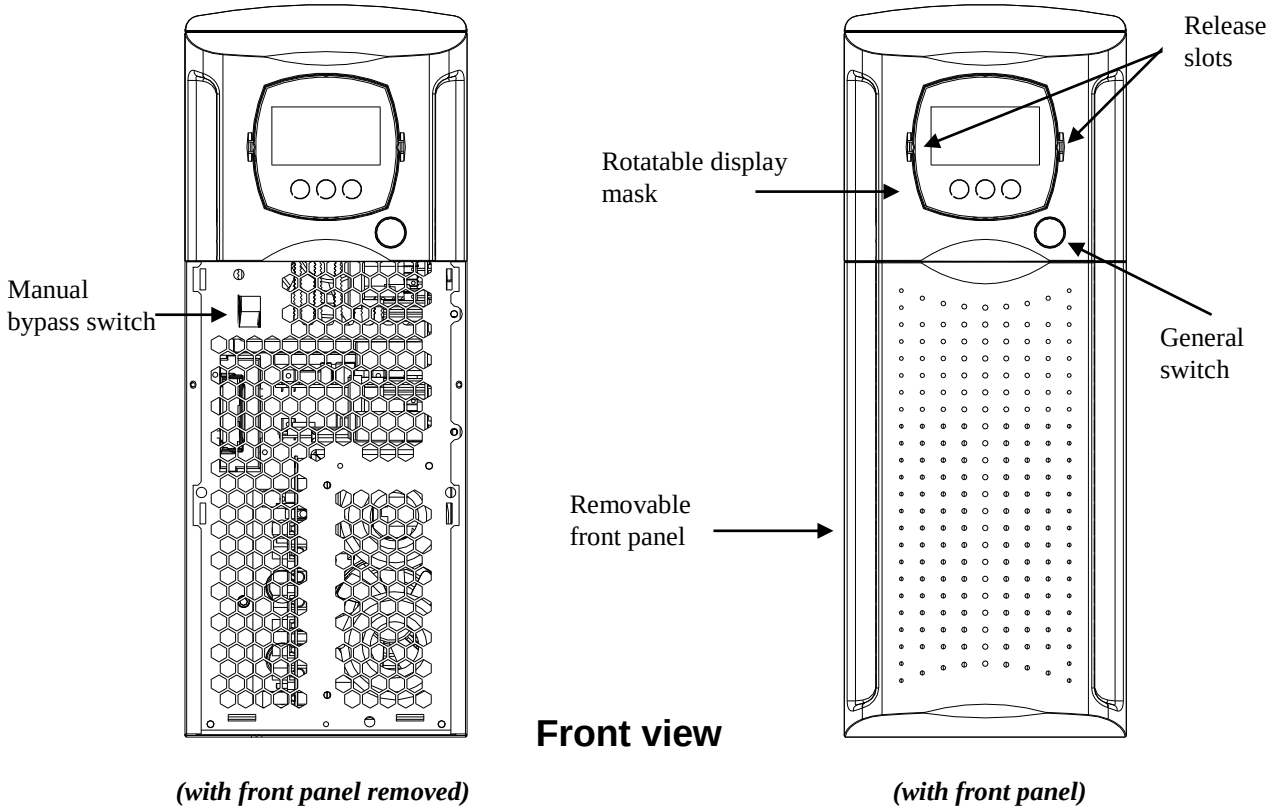
Release slots
Rotatable display mask
Manual bypass switch
General switch
Removable front panel
Front view
(with front panel removed)
(with front panel)

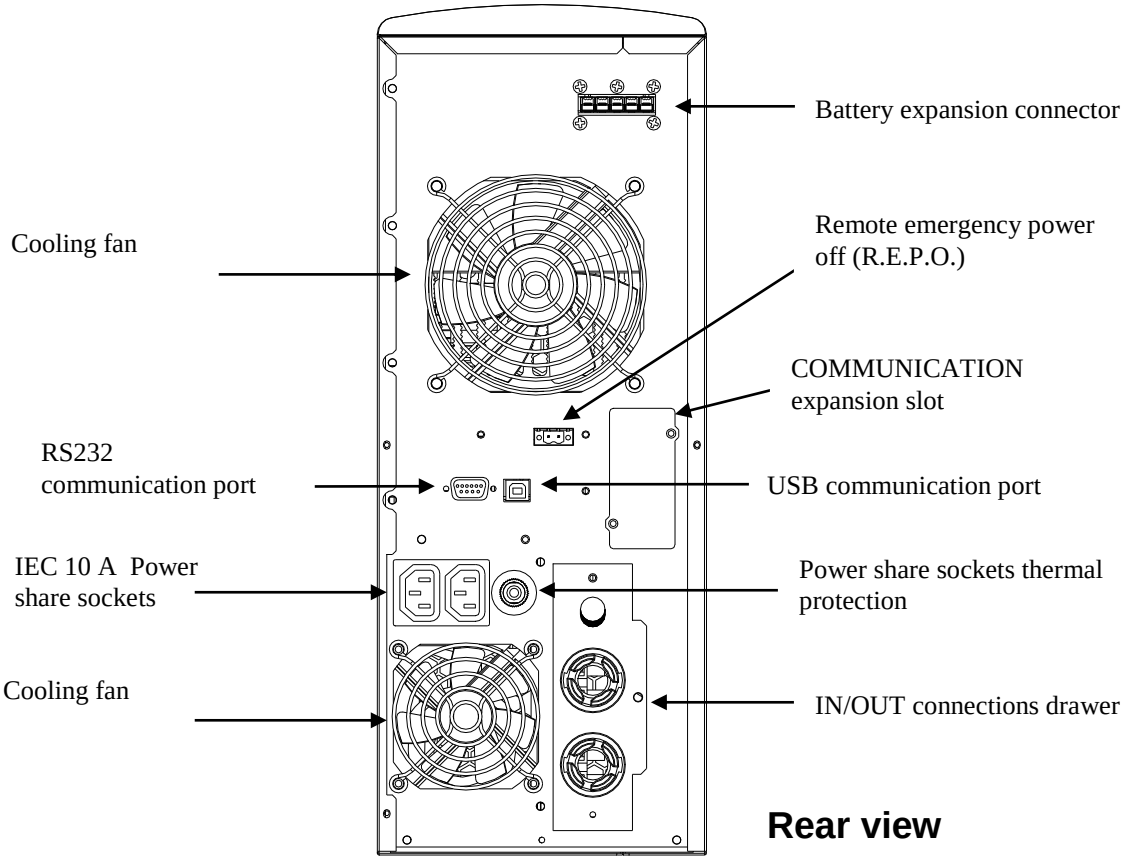
Battery expansion connector
Cooling fan
Remote emergency power off (R.E.P.O.)
COMMUNICATION expansion slot
RS232 communication port
USB communication port
IEC 10 A Power share sockets
Power share sockets thermal protection
Cooling fan
IN/OUT connections drawer
Rear view

PRESENTATION

BATTERY BOX VIEWS

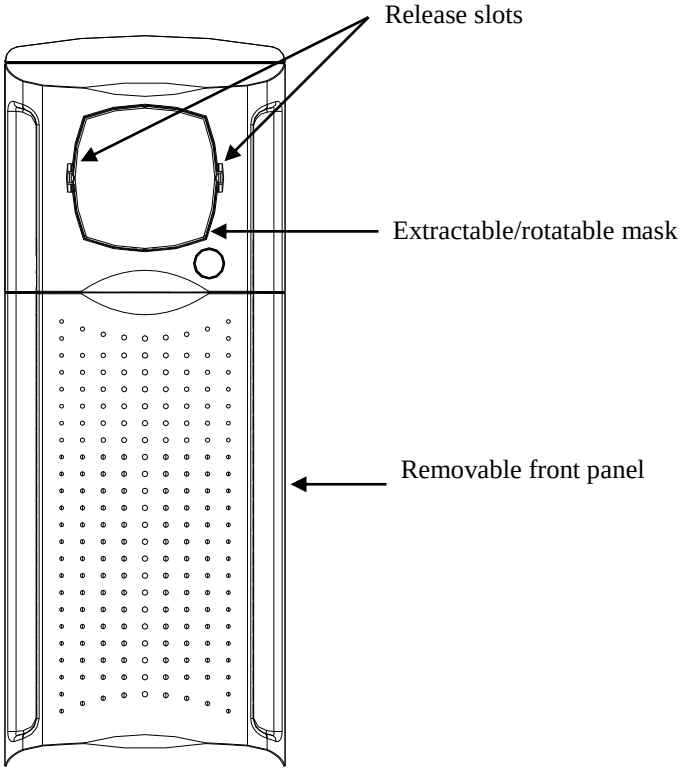

Front view

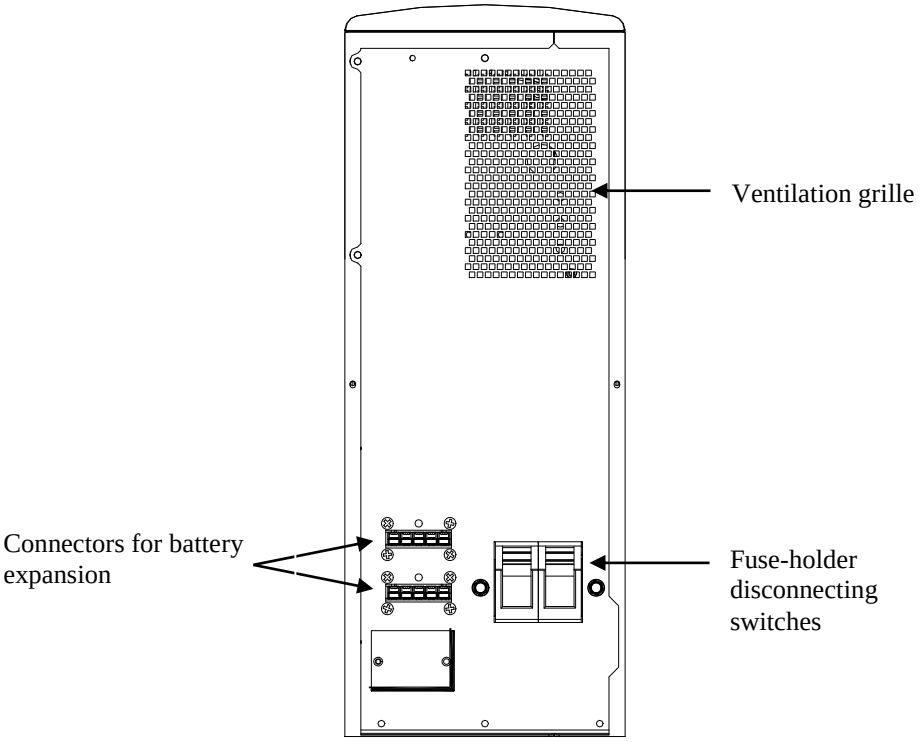

Rear view

DISPLAY MASK VIEW

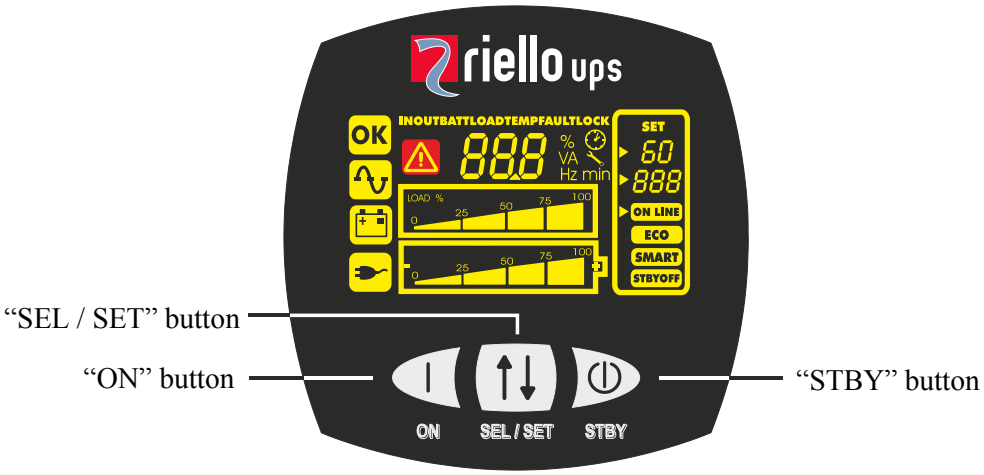

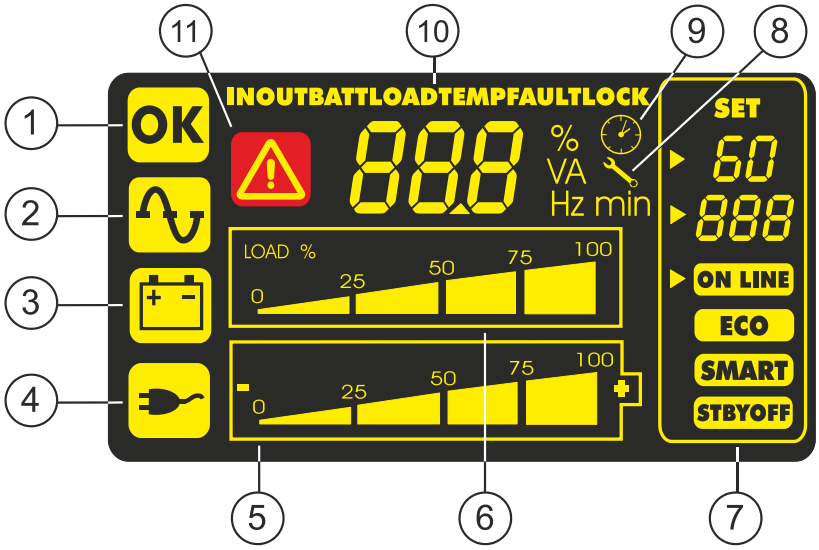

LCD Display

1. Normal operation
2. Operation from mains
3. Operation from battery
4. Load powered by the bypass
5. Battery back up time indicator
6. Load level indicator
7. Configuration area
8. Maintenance request
9. Timer
10. Measurement display area
11. Stand-by/alarm

INSTALLATION

OPENING THE PACKAGING AND CHECKING ITS CONTENTS

After opening the packaging, first check the contents.
The packaging should contain the following:

UPS

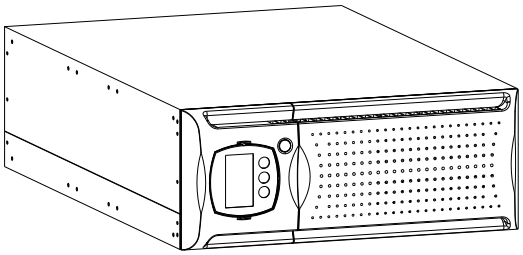

Battery box

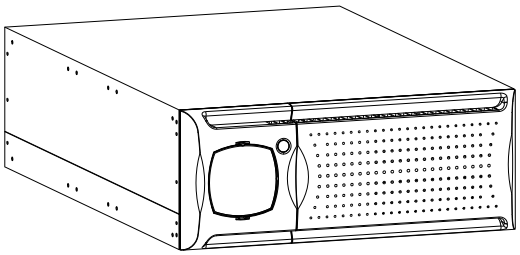

1 cable guide + 2 seal stops

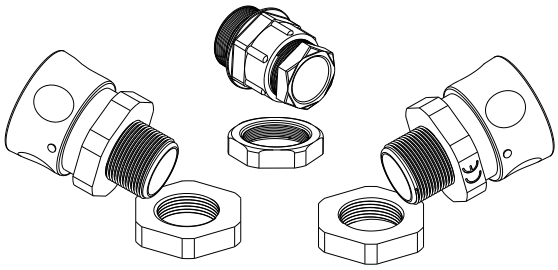

6 plastic covers (upper panels UPS and Battery box)

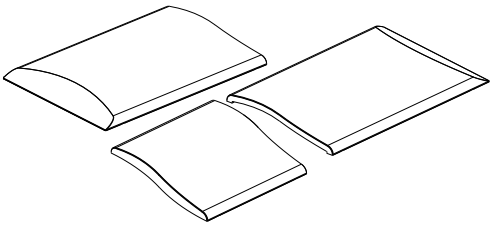

Ferrules for cables - terminal board connection

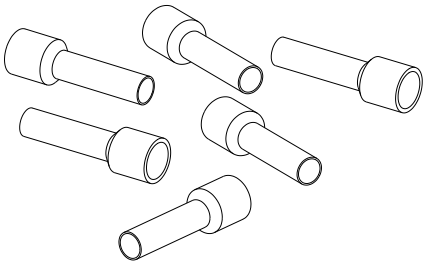

2 plastic keys to release display

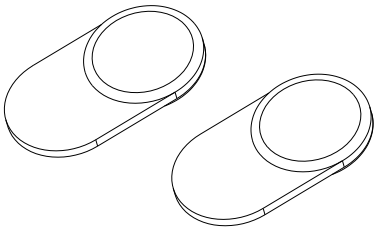

2 Handles kits

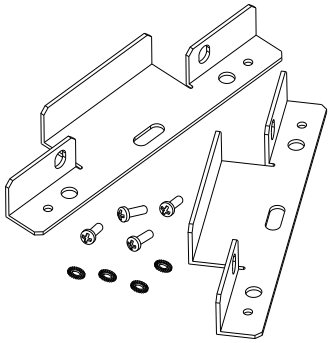

RS232 serial cable

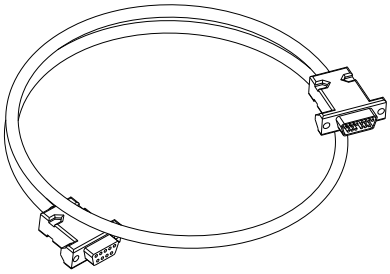

UPS-Battery box connection cable

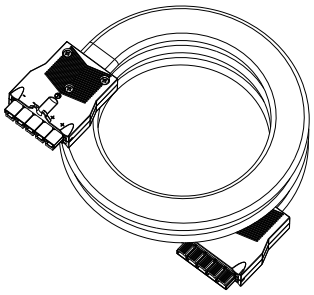

2 Fuses for Battery box - 14x51 mm, 50A, 400V

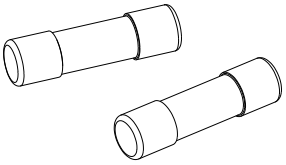

User manual + CD-ROM software

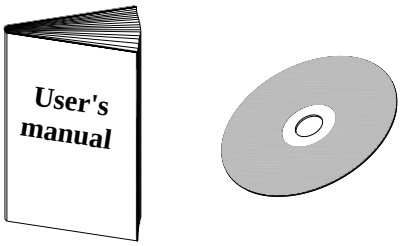

INSTALLATION

WARNING: this UPS product conforms to the current electromagnetic compatibility (EMC) regulations (C2 class). It may cause radio interference in the home environment. The user may have to adopt supplementary measures.

TOWER VERSION

This chapter describes the operations required to prepare the UPS and the Battery box for use in the tower version.
WARNING: for your safety and that of your product, the information set out below should be followed carefully.

BEFORE CARRYING OUT THE FOLLOWING SEQUENCE OF OPERATIONS, ENSURE THAT THE UPS IS COMPLETELY SWITCHED OFF AND NOT CONNECTED TO THE ELECTRICITY MAINS OR TO ANY LOAD

Once removed from the packaging, the UPS and the Battery box are ready for installation in a tower configuration.
All that is needed to complete this configuration is to mount the six plastic covers provided, three in the upper part of the UPS and the other three in the upper part of the Battery box, as described below:

The three covers have an interlocking system:
locate the cover mounting holes in the upper part of the UPS and of the Battery box and very carefully engage them by exerting gentle pressure (see figure at side).

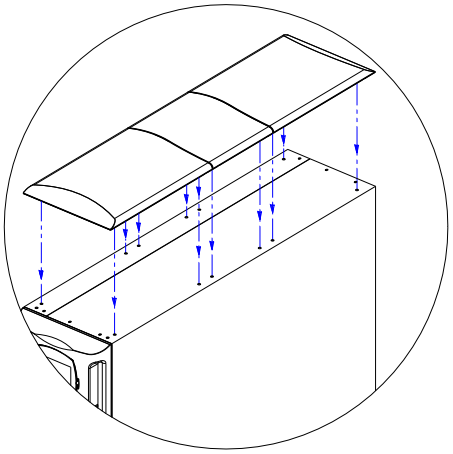

RACK VERSION

The sequence of operations required to convert the UPS and the Battery box into the rack version is described below.
WARNING: for your safety and that of your product, the information set out below should be followed carefully.

BEFORE CARRYING OUT THE FOLLOWING SEQUENCE OF OPERATIONS, ENSURE THAT THE UPS IS COMPLETELY SWITCHED OFF AND NOT CONNECTED TO THE ELECTRICITY MAINS OR TO ANY LOAD

1 - First remove the feet at the base of the UPS and Battery box. Put the UPS and the Battery box into a horizontal position very carefully, and with a small slotted screwdriver carefully lift the pin at the centre of the foot. Once it has been lifted, remove the foot from the bases of the UPS and Battery box. Repeat these operations for the remaining feet. The exact sequence to follow is shown at the side:

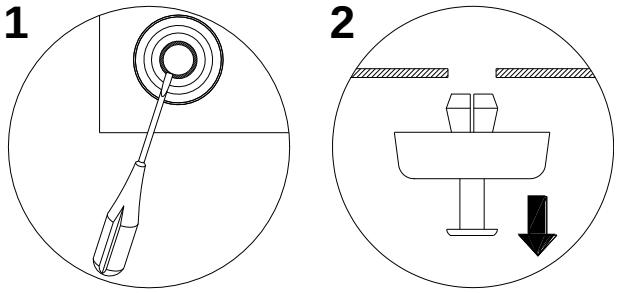

2 - Once all the feet have been removed, the display mask must then be rotated. Insert the keys provided in the release slots located at the sides of the display mask and exert enough gentle pressure to release the mask from the UPS, as shown in the figure at the side. Repeat the same operations to release the mask from the Battery box.

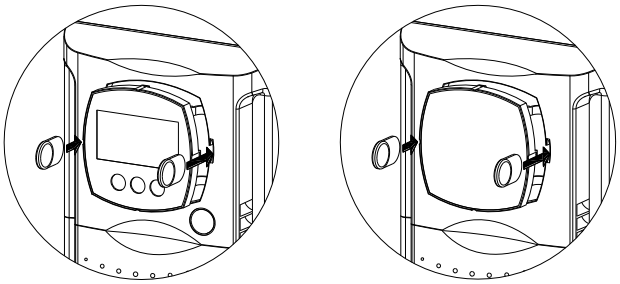

3 - WARNING: The display mask is connected to the UPS by means of a cable. The mask must therefore be removed very carefully, without pulling or exerting undue force, in order to avoid damaging the display and/or the UPS. DO NOT TRY TO SEPARATE THE DISPLAY MASK FROM THE UPS IN ANY WAY.

4 - Rotate the mask 90° anticlockwise and reengage it in the UPS by carefully inserting it in the housing until a slight click is heard with the mask remaining in position. Do the same to rotate and reengage the mask to the Battery box.

NOTE: The pressure must be exerted near the release slots

5 - Rotate the UPS and the Battery box 90° clockwise taking the utmost care

INSTALLATION

6 - At this point, with the UPS and the Battery box in a horizontal position, fasten the handles to the sides of the UPS and Battery box with the screws as shown in the figures below.

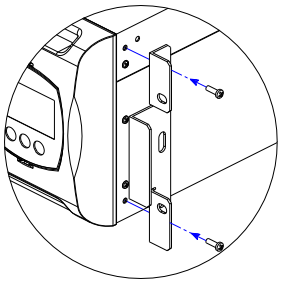

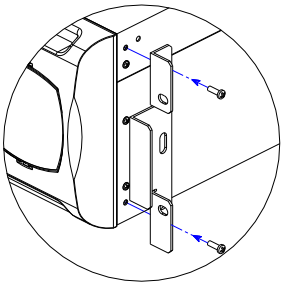

NOTE: The UPS and Battery box are compatible for mounting in standard rack cabinets of 600mm x 800mm or more (in width). Support brackets (guides with L-shaped support) must be used in rack installations due to the weight of the UPS and of the Battery box. It is recommended to install the UPS above the Battery box and in the lower part of the rack cabinet for the same reason.

The manufacturers cannot accept liability for damage caused by wrong connections or by operations other than those described in this manual.

INSTALLATION PROCEDURES

Before connecting the UPS to the Battery box, ensure compliance with the following points:

- Install the UPS and the Battery box on a flat, stable surface.
- Avoid placing in positions exposed to direct sunlight or hot air
- Maintain room temperature between 0°C and 40°C
  N.B.: the UPS can operate with an ambient temperature of between 0°C and 40°C. The optimal operating temperature for the batteries inside the Battery box is between 20 and 25°C. If the operational lifetime of the batteries is an average of 4 years with an ambient temperature of 20°C, this will be halved if the temperature goes up to 30°C.
- The ambient humidity rate must not exceed 90%.
- Avoid dusty environments.
- Ensure that the UPS and the Battery box are placed with the front and the rear at least 10 cm away from walls. Do not place objects on top of the ventilation holes in order to allow adequate ventilation.
- The cable connecting the UPS to the Battery box must not be extended by the user. Contact the supplier in case of need.

CONNECTING THE UPS TO THE BATTERY BOX

- Connect the UPS to the Battery box by means of the expansion cable provided (see figure below)
- Insert the two fuses provided into the fuse-holder disconnecting switches at the back of the Battery box. Close the disconnecting switches.
- The cable can be connected to either of the two sockets located at the back of the Battery box.
- The remaining unused expansion socket at the back of the Battery box can be used for the cascade connection of further Battery boxes to increase UPS autonomy.

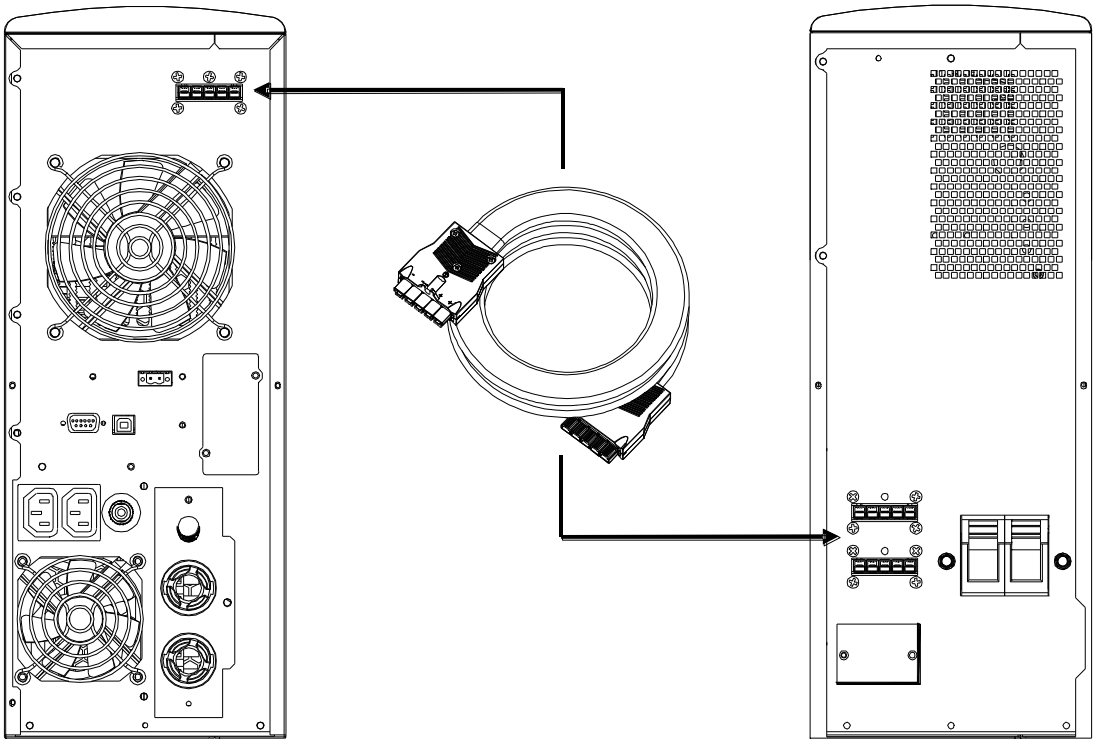

WARNING:

Only one UPS can be connected for each Battery box or for several cascade-connected Battery boxes.

USE

CONNECTIONS

INSTALLATION MUST BE CARRIED OUT EXCLUSIVELY BY QUALIFIED PERSONNEL.

THE FIRST CONNECTION TO BE CARRIED OUT IS THE PROTECTION CONDUCTOR (EARTH CABLE), TO BE INSERTED IN THE TERMINAL MARKED ⏚.

THE UPS MUST NOT BE OPERATED WITHOUT BEING CONNECTED TO THE EARTHING SYSTEM.

Warning: *if the neutral (N) and phase (F) instructions are observed for the plugs and sockets, the UPS will not change the existing neutral arrangements when inserted in a system. The resistance on the neutral connection is less than 0.1 ohm.*
A differential switch placed upstream will also be triggered for a fault occurring downstream of the UPS. The sensitivity of this switch has to take into account the leakage current of the unit (approx. 2 mA) and of the load which are added together on the UPS earth conductor.

UPS input	Differential switch
Single-phase	Type B or Type A
Three-phase	Type B

The neutral arrangements will only be changed if an isolation transformer is connected or when the UPS is operating with the neutral isolated upstream.
Avoid connecting the output neutral to the input neutral or to earth as this could damage the UPS .

For the mains and load connections follow the instructions below:

1. Install a 63A magneto-thermal switch with B or C trip curve (4 poles for three phase versions, 2 poles for single phase versions) upstream of the device.

2. The terminals to be used for the connection of the input and output lines are located inside the IN/OUT connections drawer. Undo the screw securing the connections drawer located on the right-hand side of the drawer (see figure at side).

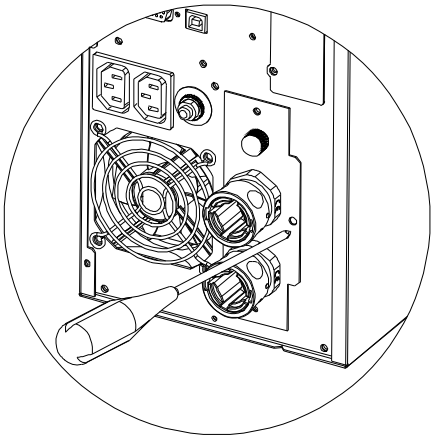

3. Pull the drawer out as much as is needed for the terminals to be easily accessible (see figure at side). WARNING: the drawer has a locking system to prevent it being pulled out completely. Do not try to remove the drawer completely.

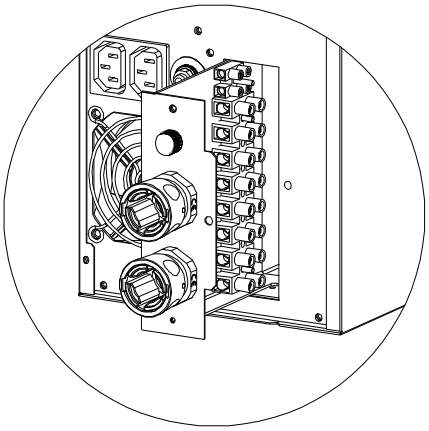

8-10kVA single phase version

1. **Use 3 cables with 10 mm² section (EARTH, N and L) in input, and 3 cables with 10 mm² section for the output (EARTH, N and L).** With reference to the figure shown at the side:
   - Insert the cables from the 63A magneto-thermal switch into seal stop P2 (input line).
   - Insert the cables from the load into seal stop P1 (output line).
   - Strip the cables observing the measurements provided.
   - Insert the part that has just been stripped into the ferrules provided.

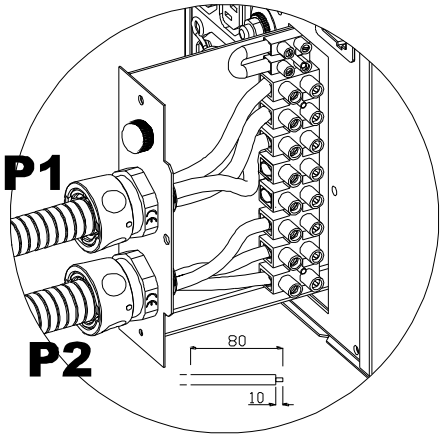

2. Connect the wires to the relative terminals strictly following the instructions set out below:

   Input line

   a - Ensure that the magneto-thermal switch upstream is open.

   b - Connect the earth wire to terminal 3.

   c - Connect the neutral wire to terminal 1.

   d - Connect the phase wire to terminal 2.

   Output line

   a - Connect the earth wire to terminal 6.

   b - Connect the neutral wire to terminal 7.

   c - Connect the phase wire to terminal 8.

   Bypass line

   a - Ensure that a jumper is connected at terminals 9 and 10; this is needed for the correct operation of the UPS.

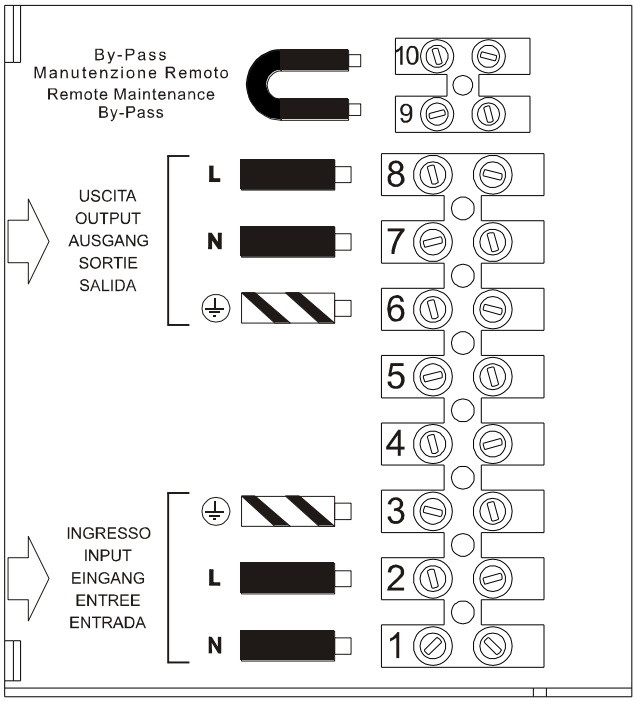

3. Secure the cable guides to the flange, close the drawer and secure it with the screw removed previously.

USE

Three phase version

1. ***(8-10kVA THREE PHASE VERSION):*** **Use 3 cables with 6 mm^2 section (EARTH, L2 and L3) and 2 with 10 mm^2 section (N, L1) in input (N.B.: L1 and N have a greater section because in operation from bypass they have to carry all the input current). For the output use 3 cables with 10 mm^2 section (EARTH, N and L).** With reference to the figure shown at the side:
   - Insert the cables from the 63A magneto-thermal switch into seal stop P2 (input line).
   - Insert the cables from the load into seal stop P1 (output line).
   - Strip the cables observing the measurements provided.
   - Insert the part that has just been stripped into the ferrules provided.

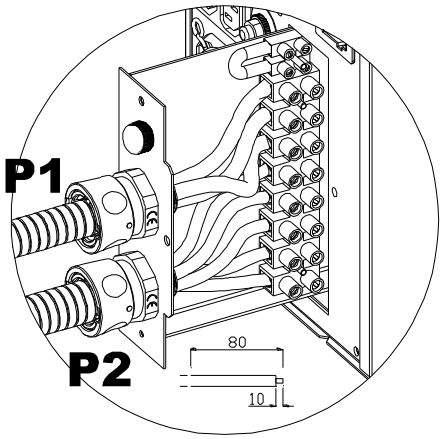

   (6,5kVA THREE PHASE VERSION): **Use 3 cables with 4 mm^2 section (EARTH, L2 and L3) and 2 with 6 mm^2 section (N, L1) in input (N.B.: L1 and N have a greater section because in operation from bypass they have to carry all the input current). For the output use 3 cables with 6 mm^2 section (EARTH, N and L).** With reference to the figure shown at the side:
   - Insert the cables from the 63A magneto-thermal switch into seal stop P2 (input line).
   - Insert the cables from the load into seal stop P1 (output line).
   - Strip the cables observing the measurements provided.
   - Insert the part that has just been stripped into the ferrules provided.

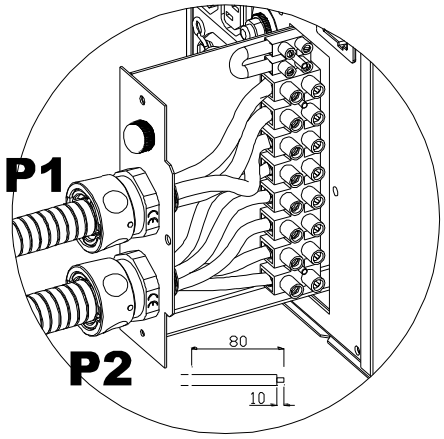

2. Connect the wires to the relative terminals strictly following the instructions set out below:

   Input line

   a - Ensure that the magneto-thermal switch upstream is open.

   b - Connect the earth wire to terminal 5.

   c - Connect the neutral wire to terminal 1.

   d - Connect the phase wires to terminals 2, 3 and 4 (use the red wire for L1).

   Output line

   a - Connect the earth wire to terminal 6.

   b - Connect the neutral wire to terminal 7.

   c - Connect the phase wire to terminal 8.

   Bypass line

   a - Ensure that a jumper is connected at terminals 9 and 10; this is needed for the correct operation of the UPS.

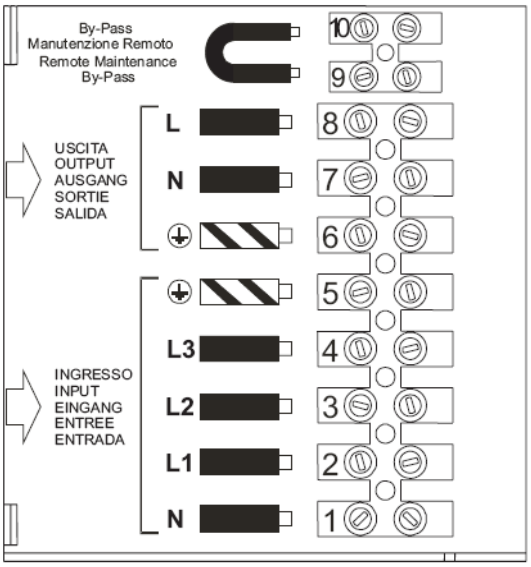

3. Secure the cable guides to the flange, close the drawer and secure it with the screw removed previously.

Version with external Bypass remote control

If it is required to make the Bypass remote maintenance control external, follow points 1, 2 and 3 as described above. Then continue as shown below:

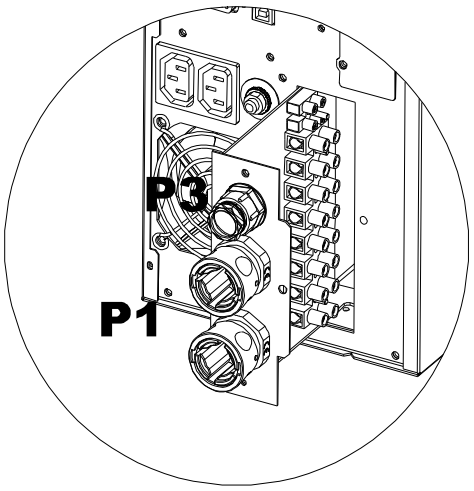

1. Remove the plug from the first hole at the top of the removable drawer and mount the cable guide provided.

2. **Follow the instructions described above for the connection, number and section of the cables to be used, passing through seal stops P1 and P2. Use a 2x0.75 mm^2 cable for connection with the remote Bypass terminals.** With reference to the figure shown at the side:
   - Insert the Bypass external control cable to the inside of cable guide P3.
   - Strip the cables observing the measurements provided.
   - Insert the part that has just been stripped into the ferrules provided.

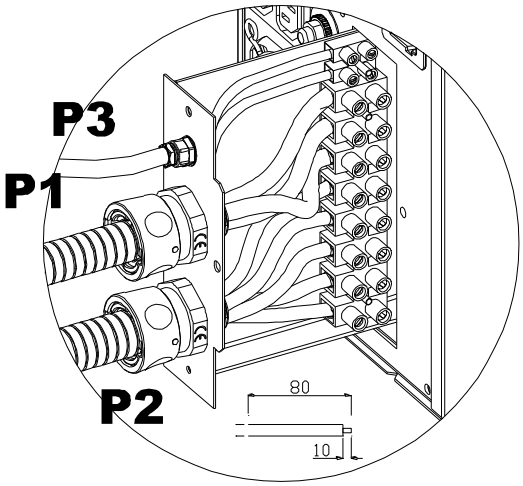

3. Connect the wires to the relative terminals strictly following the instructions described above. The Bypass line can be connected to the UPS in single phase or three phase connection. Connect the wires of the Bypass line as follows:

<u>Bypass line</u>
a - Connect the two wires of the cable to terminals 9 and 10 for the external control of the remote Bypass.

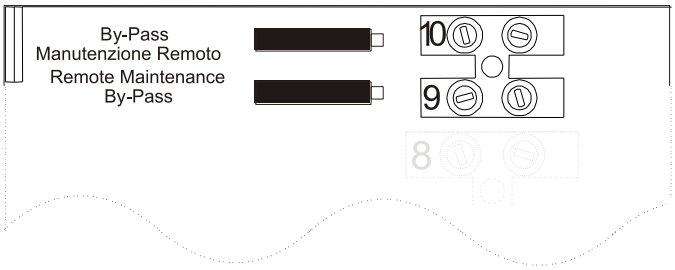

USE

Secure the cable guide and the seal stop to the flange, close the drawer and secure it with the screw removed previously.

A WARNING LABEL MUST BE AFFIXED TO ALL MAINS POWER ISOLATING SWITCHES INSTALLED FAR FROM THE UPS AREA, IN ORDER TO REMIND SUPPORT SERVICE PERSONNEL THAT THE CIRCUIT IS CONNECTED TO A UPS. THE LABEL MUST CARRY THE FOLLOWING MESSAGE:

ISOLATE THE UNINTERRUPTIBLE POWER SYSTEM (UPS)
BEFORE WORKING ON THIS CIRCUIT

FIRST START-UP

1) Ensure that all the operations described in the paragraph above, *"Connections",* have been carried out correctly.
2) Close the magneto-thermal switch located upstream of the UPS.
3) Press the general switch located on the front panel.
4) The UPS will start up after a few seconds; the display will come on, a beep will be emitted and the icon will flash.
   The UPS is now in stand-by state: this means that the UPS is in a minimum consumption condition. The microcontroller is powered and carries out monitoring and autodiagnostics tasks; the batteries are charging; everything is ready to activate the UPS. There is also a stand-by state during operation from battery if the timer is activated.
5) Check the settings on the display (see paragraph: ***Configuration area)***

START-UP FROM MAINS

1) Press the "ON" button. When this is pressed all the icons on the display will light up for 1 second and the UPS will emit a beep.
2) Switch on the equipment connected to the UPS.

Only for the first start-up: after approx. 30 sec., check that the UPS is operating correctly:

1. Simulate a black-out by opening the switch connected upstream of the UPS.
2. The load must continue to be powered, the icon should appear on the display and a beep should be heard every 4 seconds.
3. If the switch upstream is closed again the UPS must go back to operating from the mains.

START-UP FROM BATTERY

1) Press the general switch located on the front panel.
2) Keep the "ON" button pressed for at least 5 seconds. All the icons on the display will light up for 1 second and the UPS will emit a beep.
3) Switch on the equipment connected to the UPS.

UPS SHUTDOWN

To switch the UPS off, keep the "STBY" key pressed down for at least 1.5 seconds. The UPS will return to the stand-by condition and the icon will start to flash:

a) If the mains is present, the general switch must be pressed so that it returns to its original position (raised position) to switch the UPS off completely.
b) If the UPS is operating from battery and the timer has not been set, it will automatically switch off completely after 5 seconds. If however the timer has been set, the "STBY" key has to be pressed for at least 5 seconds to switch off the UPS. If it is required for the UPS to stay completely switched off when mains power returns, the general switch has to be pressed (see point a.).

WARNING: the UPS is equipped with an emergency redundant power supply which, in the event of a UPS failure, will act to avoid the load being shut off by switching it on to the bypass.

If you switch the UPS off simply be pressing the main switch (without first putting it in stand-by as explained in the manual), **the load will still be powered by the bypass**.

USE

DISPLAY PANEL INDICATIONS

This section describes in detail all the information that can be shown on the LCD display.
In order to make it clearer, all the information displayed can be divided into three main groups:

- UPS status indicators
- Measurements display area
- Configuration area

UPS status indicators

ICON	STATUS	DESCRIPTION
	Constant	Indicates a fault
	Flashing	The UPS is in stand-by state
	Constant	Indicates regular operation
	Constant	The UPS is operating from the mains
	Flashing	The UPS is operating from the mains, but the output voltage is not synchronized with the mains voltage
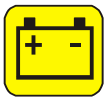	Constant	The UPS is operating from the battery. When it is in this state the UPS emits an acoustic signal (beep) at regular intervals of 4 sec.
	Flashing	End of discharge prealarm. Indicates that the battery back up time is coming to an end. In this condition the UPS emits a beep at regular intervals of 1 sec.
	Constant	Indicates that the loads connected to the UPS are powered from the bypass
	Dynamic	Indicates the estimated percentage of back-up time
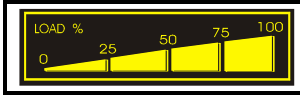	Dynamic	Indicates the % of load applied to the UPS with respect to the nominal value
	Flashing	A maintenance operation is required
	Constant	Indicates that the timer is activated (programmed start-up or shutdown). The timer can be activated/deactivated via the software provided
	Flashing	1 minute to go before the UPS starts up or 3 minutes before it shuts down

Measurements display area

The most important measurements relating to the UPS can be shown in sequence on the display.
When the UPS is started up, the display shows the value of the mains voltage.
To go to a different display press the "SEL/SET" button repeatedly until the required measurement is displayed.
If a fault/alarm (FAULT) or a lock (LOCK) should occur, the type and corresponding alarm code is automatically shown on the display.

Single phase version

Some examples are shown below:

GRAPHIC EXAMPLE[1]	DESCRIPTION
	Mains voltage
	Mains frequency
	Voltage output from the UPS
	Output voltage frequency
	Residual battery back up time
	Percentage of battery charge

GRAPHIC EXAMPLE[1]	DESCRIPTION
	Total battery voltage
	Percentage of the applied load
	Current absorbed by the load
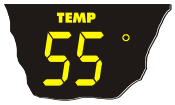	Temperature of the cooling system for the UPS internal electronics
	Fault/Alarm [2]: the corresponding code is displayed
	Lock [2]: the corresponding code is displayed

[1] The values shown in the images in the table are purely indicative.

[2] The FAULT/LOCK codes can only be displayed if they are active (i.e., if there is a fault/alarm or a lock).

Three phase version

Some examples are shown below:

GRAPHIC EXAMPLE [1]	DESCRIPTION
	Voltage phase 1 [2]
	Voltage phase 2 [2]
	Voltage phase 3 [2]
	Output voltage frequency
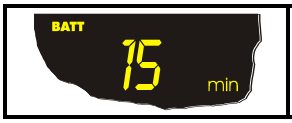	Residual battery back up time

GRAPHIC EXAMPLE [1]	DESCRIPTION
	Percentage of battery charge
	Total battery voltage
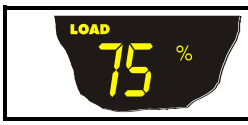	Percentage of the applied load
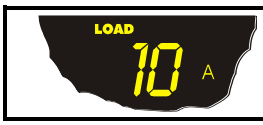	Current absorbed by the load
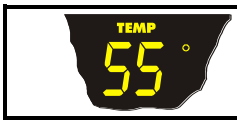	Temperature of the cooling system for the UPS internal electronics
	Fault/Alarm [3]: the corresponding code is displayed
	Lock [3]: the corresponding code is displayed

[1] The values shown in the images in the table are purely indicative.

[2] Alternative indication Phase No./Voltage.

[3] The FAULT/LOCK codes can only be displayed if they are active (i.e., if there is a fault/alarm or a lock).

Configuration area

The configuration area groups together the main UPS operating parameters and displays its current status. The parameters contained in this area can be changed directly from the display panel.

SETTABLE PARAMETERS:

- **Frequency:** Output voltage frequency
- **Voltage:** Output voltage
- **Mode:** UPS operating mode

The image at the side shows the display zone for the settings (configuration area) showing the three settable parameters.

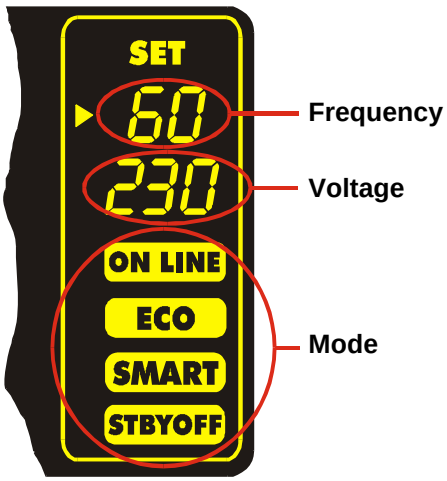

How to change the settings:

- To access the configuration area, hold the "SEL/SET" button down for at least 2 sec.
- The word "SET" will light up and an arrow (►) will appear to the left of *Frequency*.
- The arrow shows the selected setting. To select a different parameter press the "SEL/SET" button.
- To change the selected item, press the "ON" button.
- To exit from the configuration area, hold the "SEL/SET" button down for at least 2 sec.

POSSIBLE SETTINGS

Frequency:	□ **50 Hz**	□ **60 Hz**	□ **Off** (frequency auto-sensing)	
Voltage:	□ **220 V**	□ **230 V**	□ **240 V**	
Mode:	□ **ON LINE**	□ **ECO**	□ **SMART**	□ **STBYOFF**

NOTE: Changes in the output frequency configuration will only become effective when the UPS has been completely shut down and restarted (via the general switch).

THE *OUTPUT FREQUENCY* AND *VOLTAGE* PARAMETERS MUST BE COMPATIBLE WITH THE PARAMETERS OF THE LOAD POWERED BY THE UPS

USE

OPERATING MODES

The mode that ensures maximum protection to the load is ON LINE mode (default), where the energy for the load undergoes a double conversion and is reconstructed fully sinusoidal in output with frequency and voltage set by accurate digital microprocessor control independently of the input (V.F.I.). *****
The following modes can be set in addition to the conventional ON LINE double conversion operating mode:

- ECO (LINE INTERACTIVE)
- SMART (SMART ACTIVE)
- STBYOFF (STAND-BY OFF)

The load is normally powered from the bypass in ECO mode, in order to optimize efficiency. If the mains goes out of the admitted tolerances, the UPS switches to normal ON LINE double conversion operation. About five minutes after the mains returns within tolerance, the load is once again switched onto the bypass.

If the user cannot decide which operating mode is the most suitable (ON LINE or ECO), this decision can be left to SMART ACTIVE mode. In this mode, the UPS decides autonomously which mode to configure on the basis of statistics collected on the quality of the mains power supply.

STAND-BY OFF mode is used for operation as a back-up unit:
when the mains is present, the load is unpowered while if a blackout occurs, the load is powered from the inverter via the batteries.

R.E.P.O.

This isolated input is used to remotely switch off the UPS in an emergency. Any “Remote Emergency Power Off” (R.E.P.O.) switch that is normally closed must be connected to the connector located at the back of the UPS.
The UPS is supplied ex-works with the R.E.P.O. terminals short circuited: remove the short circuit if this contact is connected to the auxiliary of a remote emergency switch.

The R.E.P.O. circuit is self-powered with SELV type circuits. No external power supply voltage is therefore required. When it is closed (normal condition) there is a current of 10mA max.

PROGRAMMABLE AUXILIARY SOCKET (POWER SHARE)

The UPS is provided with an output socket that allows the automatic disconnection of the load applied to it under certain operating conditions. The events that determine the automatic cut-out of the Power share socket can be user-selected by means of the configuration software (see paragraphs **Configuration software** and **UPS Configuration**).
It is possible for example to select cut-out after a certain time of operation from battery, or on reaching the end of the battery discharging prealarm threshold, or in the event of an overload.

***** The rms value of the output voltage is fixed by accurate microprocessor control independently of the input voltage while the frequency of the output voltage is synchronized (within a user-selectable tolerance) with that of the input to enable use of the bypass. The UPS will desynchronize outside of this tolerance, returning to nominal frequency, and the bypass can no longer be used (free running mode).

UPS CONFIGURATION

The following table shows all the possible configurations available to adapt the UPS to the user's requirements.

KEY:

= Indicates that the configuration can be changed from the display panel as well as by means of the configuration software.

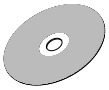

= Indicates that the configuration can only be changed via the configuration software.

FUNCTION	DESCRIPTION	PREDEFINED	POSSIBLE CONFIGURATIONS	MODE
Output frequency	To select the nominal output frequency	Auto	• 50 Hz • 60 Hz • Auto: automatic sensing from the input frequency	
Output voltage	To select the nominal output voltage	230V	• 220V • 230V • 240V • 220 ÷ 240 in 1V steps (only via software)	
Operating mode	To select one of the 4 different operating modes	ON LINE	• ON LINE • ECO • SMART ACTIVE • STAND-BY OFF	
Start-up delay	Delay before automatic restart after the mains returns	5 sec.	• Disabled • 1 ÷ 255 in 1 sec. steps	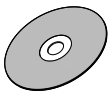
Shutdown due to minimum load	Automatic shutdown of the UPS in operation from the battery if the load is less than 5%	Disabled	• Enabled • Disabled	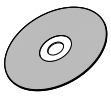
Back up time limit	Maximum time of operation from the battery	Disabled	• Disabled (full battery discharge) • 1 ÷ 65000 in 1 sec. steps	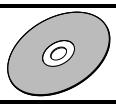
End of discharge alert	Estimated remaining back up time for the end of discharge alert	3 min.	1 ÷ 255 in 1 min. steps	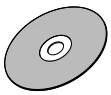
Battery test	Time interval for the automatic battery test	40 hours	• Disabled • 1 ÷ 1000 in 1 hour steps	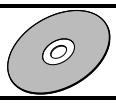

FUNCTION	DESCRIPTION	PREDEFINED	POSSIBLE CONFIGURATIONS	MODE
Alarm threshold for maximum load	Selects the user overload limit	Disabled	• Disabled • 0 ÷ 103 in 1% steps	
Display brightness	Selects the level of brightness of the LCD display	Maximum	Minimum ÷ Maximum in 20 steps	
Acoustic alarm	Selects the operating mode of the acoustic alarm	Low	• Normal • Low: does not sound for momentary bypass intervention	
Auxiliary socket (power share)	Selects the operating mode of the auxiliary socket	Always connected	• Always connected • Disconnection after *n* seconds of operation from battery • Disconnection after *n* seconds from the end of discharge prealarm signal • ... (see the configuration software manual)	

ADVANCED SETTINGS

Input frequency tolerance	Selects the allowed input frequency range for the passage onto bypass and for synchronization of the output	± 5%	• ± 0.25% • ± 0.5% • ± 0.75% • ± 1 ÷ ±10 in 1% steps	
Bypass voltage thresholds	Selects the allowed voltage range for the passage onto bypass	Low: 180V High: 264V	Low: 180 ÷ 200 in 1V steps High: 250 ÷ 264 in 1V steps	
Bypass voltage thresholds for ECO	Selects the allowed voltage range for operation in ECO mode	Low: 200V High: 253V	Low: 180 ÷ 220 in 1V steps High: 240 ÷ 264 in 1V steps	
Sensitivity of intervention for ECO	Selects the sensitivity of intervention during operation in ECO mode	Normal	• Low • Normal • High	
Power supply of the load in stand-by	Power supply of the load on bypass with UPS switched off (stand-by state)	Disabled (load NOT powered)	• Disabled (not powered) • Enabled (**powered**)	
Bypass operation	Selects the mode of use of the bypass line	Enabled / High sensitivity	• Enabled/High sensitivity • Enabled/Low sensitivity • Disabled with input/output synchronization • Disabled without input/output	

			synchronization	

COMMUNICATION PORTS

The following communication ports are located at the back of the UPS (see *UPS Views*):

- Serial port, available with RS232 connector and USB connector.
  NOTE: use of one connector automatically excludes the other.
- Expansion slots for additional COMMUNICATION SLOT interface cards.

RS232 and USB connectors

RS232 CONNECTOR

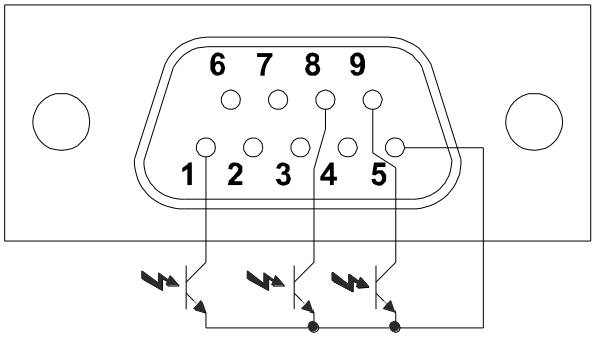

PIN #	SIGNAL
1	Contact closed: UPS locked *
2	TXD
3	RXD
4	
5	GND
6	
7	Interface power supply input +12Vdc
8	Contact closed: end of discharge prealarm *
9	Contact closed: operation from battery *

* Optoisolated contact max. +30Vdc/10mA

USB CONNECTOR

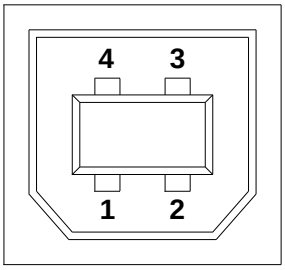

PIN #	SIGNAL
1	VBUS
2	D-
3	D+
4	GND

Communication Slot

The UPS is provided with an expansion slot for optional communication cards (see figure at the side) which enable the device to dialog using the main communication standards.

Some examples:

- Second RS232 port
- Serial duplexer
- Ethernet network agent with TCP/IP, HTTP and SNMP protocol
- RS232 port + RS485 with JBUS/MODBUS protocol
- Signalling relay card

Refer to the manufacturer's website for more information on the accessories that are available.

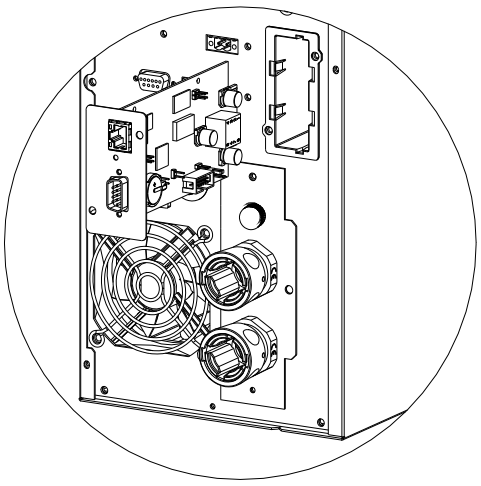

USE

SOFTWARE

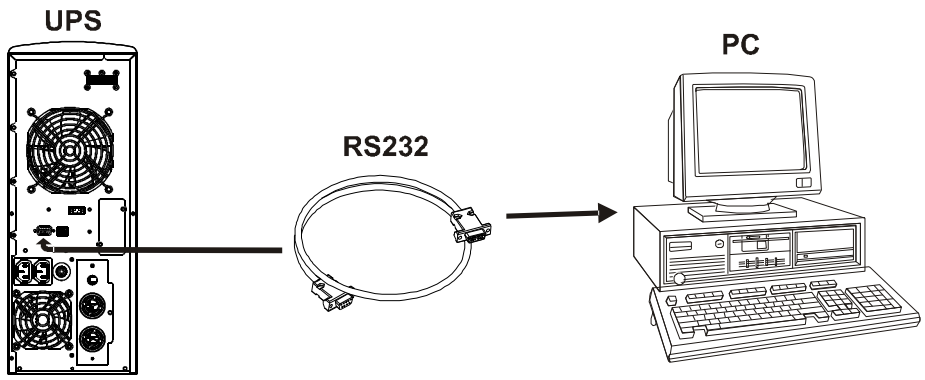

Monitoring and control software

The **PowerShield³** software provides effective and intuitive management of the UPS, displaying all the most important information, such as input voltage, load applied, and battery capacity.
It is also able to automatically effect operations such as shutdown, transmission of e-mails, SMS and network messages when particular events that can be selected by the user occur.

Installation procedure:

- Connect the UPS's RS232 communication port to a COM communication port on the PC by means of the serial cable provided* or connect the USB port on the UPS to a USB port on the PC using a USB standard cable*.
- Download the software from **www.riello-ups.com**, selecting the desired operating system.
- Follow the installation program instructions.
- For more detailed information about installation and use, refer to the software manual which can be downloaded from our website **www.riello-ups.com**.

Configuration software

Using special software, it is possible to configure the most important UPS parameters.
For a list of possible configurations, refer to the ***UPS configuration*** paragraph.

* It is recommended to use a cable with a max. length of 3 metres.

Irregular functioning of the UPS is most often not an indication of a fault but due simply to trivial problems, minor difficulties or carelessness.
We therefore recommend that you refer to the table below which gives a summary of useful information to solve the most common problems.

PROBLEM	POSSIBLE CAUSE	SOLUTION
THE DISPLAY DOES NOT SWITCH ON	GENERAL SWITCH NOT PRESSED	Press the general switch located on the front panel.
	THE BATTERY BOX CONNECTOR IS DISCONNECTED	Connect the battery box connector.
	NO CONNECTION TO THE ELECTRICITY MAINS	Check the connection to the electricity mains.
	MAINS VOLTAGE FAILURE (BLACKOUT)	Check the presence of the electricity mains voltage.
	UPSTREAM PROTECTION TRIGGERED	Reset the protection. WARNING: Check that there is no overload in output to the UPS.
THE DISPLAY IS ON BUT THE LOAD IS NOT POWERED	THE UPS IS IN STAND-BY MODE	Press the “ON” key located on the front panel to power the loads.
	STAND-BY OFF MODE HAS BEEN SELECTED	The mode has to be changed. The STAND-BY OFF mode (back-up) in fact only powers the loads in the event of a blackout.
	NO CONNECTION TO THE LOAD	Check the connection to the load.
THE UPS IS OPERATING FROM BATTERY EVEN THOUGH THE MAINS VOLTAGE IS PRESENT	UPSTREAM PROTECTION TRIGGERED	Reset the protection. WARNING: Check that there is no overload in output to the UPS.
	THE INPUT VOLTAGE IS OUTSIDE THE ALLOWED TOLERANCE FOR OPERATION FROM MAINS	Problem dependent on the mains. Wait for the input mains to return within tolerance. The UPS will automatically go back to operation from mains.
THE UPS DOES NOT SWITCH ON AND THE DISPLAY SHOWS ONE OF THESE CODES: **A06, A08**	THE TEMPERATURE OF THE UPS IS LOWER THAN 0°C	Check the temperature of the environment where the UPS is located; if it is too low, bring it to above the minimum threshold (0°C).
THE DISPLAY SHOWS THE CODE: **A11**	INPUT RELAY BLOCKED	The fault does not cause any particular malfunctions. If the problem should occur again on a subsequent start-up, contact the support service centre.

TROUBLESHOOTING

PROBLEM	POSSIBLE CAUSE	SOLUTION
THE BUZZER SOUNDS CONTINUOUSLY AND THE DISPLAY SHOWS ONE OF THESE CODES: **A54, F50, F51, F52, F55, L50, L51, L52**	THE LOAD APPLIED TO THE UPS IS TOO HIGH	Reduce the load to within the threshold of 100% (or user threshold in the case of code **A54**).
THE DISPLAY SHOWS THE CODE: **A61**	BATTERIES SHOULD BE REPLACED	Replace the battery box.
THE DISPLAY SHOWS THE CODE: **A62**	BATTERY BOX NOT PRESENT OR NOT CONNECTED	Check that the battery box is inserted and connected correctly.
THE DISPLAY SHOWS THE CODE: **A63**	THE BATTERIES ARE DISCHARGED; THE UPS IS WAITING FOR THE VOLTAGE OF THE BATTERIES TO GO OVER THE SET THRESHOLD	Wait for the batteries to recharge or force start-up manually by keeping the “ON” key pressed for at least 2 sec.
THE BUZZER SOUNDS CONTINUOUSLY AND THE DISPLAY SHOWS ONE OF THESE CODES: **F03, F05, F07, F10, F13, F21, F40, F41, F42, F43**	A MALFUNCTION OF THE UPS HAS BEEN VERIFIED; PROBABLY ABOUT TO STOP	If power can be removed from the load, switch the UPS off and then on again; if the problem should occur again, contact the support service centre.
THE BUZZER SOUNDS CONTINUOUSLY AND THE DISPLAY SHOWS ONE OF THESE CODES: **F04, L04**	THE TEMPERATURE OF THE DISSIPATORS INSIDE THE UPS IS TOO HIGH	Check that the temperature of the environment where the UPS is located does not exceed 40°C.
THE BUZZER SOUNDS CONTINUOUSLY AND THE DISPLAY SHOWS ONE OF THESE CODES: **F53, L53**	A FAULT HAS BEEN DETECTED ON ONE OR MORE APPLICATIONS POWERED BY THE UPS	Disconnect all the applications and reconnect them one by one to identify the faulty one.
THE BUZZER SOUNDS CONTINUOUSLY AND THE DISPLAY SHOWS ONE OF THESE CODES: **F60, L03, L05, L07, L10, L13, L20, L21, L40, L41, L42, L43**	A UPS MALFUNCTION HAS BEEN VERIFIED	If power can be removed from the load, switch the UPS off and then on again; if the problem should occur again, contact the support service centre.
THE DISPLAY SHOWS ONE OF THESE CODES: **C01, C02, C03**	A REMOTE CONTROL HAS BEEN ACTIVATED	If this is not required, check the position of the manual bypass switch or the status of the control inputs of any optional contacts card. Check the closing of the R.E.P.O. contact at the back of the UPS.

ALARM CODES

Using a sophisticated self check system, the UPS can verify and indicate on the display panel any faults and/or malfunctions that may occur during the normal operation of the device. In the event of a problem, the UPS indicates this by displaying the code and the type of alarm (FAULT and/or LOCK).

FAULT

FAULT signals can be subdivided into three categories.

- **Faults:** these are "minor" problems that do not stop the UPS but reduce performance or prevent the use of some of its functions.

CODE	DESCRIPTION
A06	Sensor1 temperature less than 0°C
A08	Sensor2 temperature less than 0°C
A11	Input relay locked (does not open)
A54	Load > preset user threshhold
A61	Batteries to be replaced
A62	No Battery box or not connected
A63	Waiting to recharge batteries

- **Alarms:** these are more critical problems than faults since if they persist, even for a very short time, they may cause the UPS to stop.

CODE	DESCRIPTION
F03	Auxiliary power supply not correct
F04	Dissipators overtemperature
F05	Temperature sensor1 faulty
F07	Temperature sensor2 faulty
F10	Input fuse broken or input relay locked (does not close)
F13	Condenser precharge failed
F21	Condenser bank overvoltage
F40	Inverter overvoltage
F41	Direct voltage in output
F42	Inverter voltage not correct
F43	Inverter undervoltage
F50	Overload: load > 103%
F51	Overload: load > 125%
F52	Overload: load > 150%
F53	Short circuit
F55	Waiting for reduction of load to return onto inverter
F60	Batteries overvoltage

TROUBLESHOOTING

- **Active controls:** indicate the presence of an active remote control.

CODE	DESCRIPTION
C01	Shutdown remote control
C02	Load on bypass remote control
C03	Startup remote control
C04	Battery test underway

LOCK

LOCK signals are usually preceded by an alarm signal and, due to their significance, cause the inverter to shut down and the load to be powered via the bypass line (this procedure does not include locks from strong and persistent overloads or locks due to short circuits).

CODE	DESCRIPTION
L03	Auxiliary power supply not correct
L04	Dissipators overtemperature
L05	Temperature sensor1 faulty
L06	Temperature sensor3 faulty
L07	Temperature sensor2 faulty
L10	Input fuse broken or input relay locked (does not close)
L13	Condenser precharge failed
L20	Condenser bank undervoltage
L21	Condenser bank overvoltage
L31	Bypass fault
L40	Inverter overvoltage
L41	Direct voltage in output
L42	Inverter voltage not correct
L43	Inverter undervoltage
L50	Overload: load > 103%
L51	Overload: load > 125%
L52	Overload: load > 150%
L53	Short circuit

SINGLE/SINGLE PHASE UPS TECHNICAL DATA TABLE

MODELS	SDL 8000	SDL 10000
INPUT		
Nominal voltage	220/230/240 Vac	
Accepted range	0 - 280 Vac	
Voltage range for non-intervention of battery	Maximum voltage 276Vac Minimum voltage: from 184 to 138 Vac from 100% to 50% of the linear load Return of operation from mains at 190Vac	
Nominal frequency	50 - 60 Hz ±5Hz	
Maximum current (1)	44A	54A
Nominal current (2)	34A	43A
Power factor	≥ 0.98	
Current distortion @ max load	≤ 6%	
BYPASS		
Voltage range accepted for switching	180 – 264 Vac	
Frequency range accepted for switching	Frequency selected ±5%	
Switching time	0.1ms	
BATTERY		
Recharge time (8)	6-8 h	
OUTPUT		
Nominal voltage	220/230/240 Vac selectable ±1.5%	
Static variation (3)	1.5% (7)	
Dynamic variation (4)	≤ 5% in 20ms	
Waveform	Sinusoidal	
Voltage distortion @ linear load	≤ 3%	
Voltage distortion @ distorting load	≤ 5%	
Frequency (5)	50 or 60 Hz selectable	
Current crest factor	≥ 3 : 1	
Nominal power (VA)	8000	10000
Nominal power (W)	7200	9000
Short circuit current	1.5 x In for t= 0.5sec	
SUNDRY		
Leakage current to earth	≤ 10mA	
AC/AC performance	92%	
Ambient temperature (6)	0 – 40 °C	
Humidity	< 90% non condensing	
Protections	excessive battery discharge - overcurrent - short circuit - overvoltage - undervoltage - thermal	
Hold-up time	≥ 30msec	
Noise	< 45 dB(A) at 1mt.	
Dimensions H x L x D (mm)	2 x [455mm (19”) x 175mm (4U) x 660mm (26”)]	
Weight in Kg (estimated)	approx 29 + 65 Kg	approx 30 + 65 Kg

(1) @ nominal load, minimum voltage of 180Vac, battery charging
(2) @ nominal load, nominal voltage of 230Vac, battery charging
(3) Mains/Battery @ load 0% -100%
(4) @ Mains/battery/mains @ resistive load 0%/100%/0%
(5) If the mains frequency is within ±5% (user definable) of the selected value, the UPS is synchronized with the mains. If the frequency is out of tolerance or in operation from battery, the frequency is the selected value ±0.1%
(6) 20 - 25 °C for extended battery life
(7) Recalibration may be necessary after a long period of operation, in order to maintain the output voltage within the indicated range.
(8) Time needed to reach 90% of charge (after a full discharge at load ≥80%)

TECHNICAL DATA TABLE

THREE/SINGLE PHASE UPS TECHNICAL DATA TABLE

MODELS	SDL 6500 TM	SDL 8000 TM	SDL 10000 TM
INPUT (3 Ø + N star-configured voltages)			
Nominal voltage	220/230/240 Vac		
Accepted range	0 - 280 Vac		
Voltage range for non-intervention of battery	Maximum voltage 276Vac Minimum voltage: from 184 to 138 Vac from 100% to 50% of the linear load Return of operation from mains at 190Vac		
Nominal frequency	50 - 60 Hz ±5Hz		
Maximum current (1)	13A	15A	19A
Nominal current (2)	9A	11A	14A
Power factor	≥ 0.95		
Current distortion @ max load	≤ 26%		
BYPASS (on L1)			
Voltage range accepted for switching	180 - 264 Vac		
Frequency range accepted for switching	Frequency selected ±5%		
Switching time	0.1ms		
BATTERY			
Recharge time (8)	6-8 h		
OUTPUT			
Nominal voltage	220/230/240 Vac selectable ±1.5%		
Static variation (3)	1.5% (7)		
Dynamic variation (4)	≤ 5% in 20ms		
Waveform	Sinusoidal		
Voltage distortion @ linear load	≤ 3%		
Voltage distortion @ distorting load	≤ 6%		
Frequency (5)	50 o 60 Hz selectable		
Current crest factor	≥ 3 : 1		
Nominal power (VA)	6500	8000	10000
Nominal power (W)	5850	7200	9000
Short circuit current	1.5 x In for t= 0.5sec		
SUNDRY			
Leakage current to earth	≤ 10mA		
AC/AC performance	92%		
Ambient temperature (6)	0 – 40 °C		
Humidity	< 90% non condensing		
Protections	excessive battery discharge - overcurrent - short circuit - overvoltage - undervoltage - thermal		
Hold-up time	≥ 40msec		
Noise	< 45 dB(A) at 1mt.		
Dimensions H x L x D (mm)	2 x [455mm (19”) x 175mm (4U) x 660mm (26”)]		
Weight in Kg (estimated)	approx 28 + 63 Kg	approx 29 + 65 Kg	approx 30 + 65 Kg

(1) @ nominal load, minimum voltage of 180Vac, battery charging
(2) @ nominal load, nominal voltage of 230Vac, battery charging
(3) Mains/Battery @ load 0% -100%
(4) @ Mains/battery/mains @ resistive load 0%/100%/0%
(5) If the mains frequency is within ±5% (user definable) of the selected value, the UPS is synchronized with the mains. If the frequency is out of tolerance or in operation from battery, the frequency is the selected value ±0.1%
(6) 20 - 25 °C for extended battery life
(7) Recalibration may be necessary after a long period of operation, in order to maintain the output voltage within the indicated range.
(8) Time needed to reach 90% of charge (after a full discharge at load ≥80%)

BATTERY BOX TECHNICAL DATA TABLE

BASIC MODELS		BBX SDL 240V BB NP A3	BBX SDL 240V BB NP A5
BATTERY			
Nominal voltage	[Vdc]	240	
End of charge voltage	[Vdc]	273	
No. of batteries/V		20 / 12	
SUNDRY			
Ambient temperature (1)	[°C]	0 – 40	
Humidity		< 90% non condensing	
Protections		overcurrent - short circuit	
Dimensions H x L x D	[mm]	455 x 175 x 660	
Weight	[Kg]	63	65

(1) 20-25°C for extended battery life

TABLE OF OVERLOAD TIMES

OVERLOAD TIMES	OPERATION FROM	
	BYPASS	INVERTER
100% < Load ≤ 125%	Bypass active after 2 sec Locked after 120 sec	Locked after 60 sec
125% < Load ≤ 150%	Bypass active after 2 sec Locked after 4 sec	Locked after 4 sec
Load > 150%	Bypass active instantly Locked after 1 sec	Locked after 0.5 sec

www.riello-ups.com

RPS SpA – *Riello Power Solutions*
Viale Europa, 7
37045 Legnago (VR)
Italy

0MNSDL6K5RU5LUC