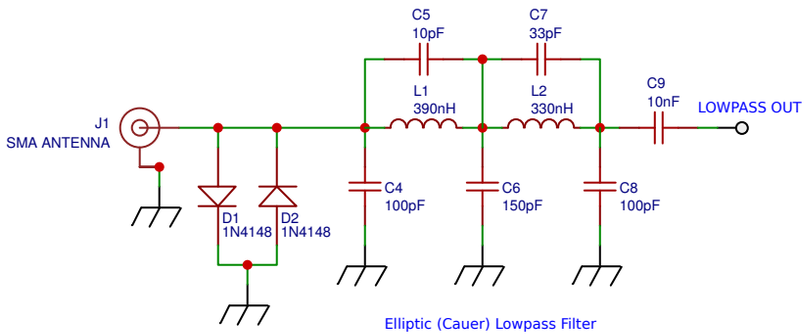

Elliptic (Cauer) Lowpass Filter

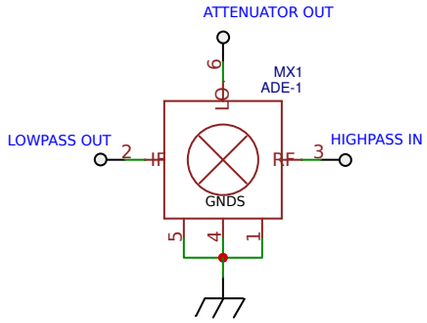

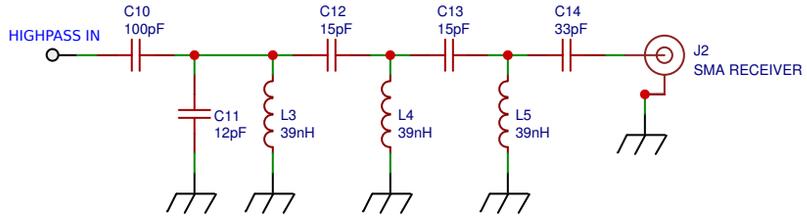

Highpass filter

Graph of the filters characteristics are located on the project page.

ADE-1 can be replaced with the following mixers:
ADE-6+ (0.05 - 250.0 MHz, Conv. Loss Typ. - 4.6 dB);
ADE-R6+ (0.15 - 250.0 MHz, Conv. Loss Typ. - 4.6 dB);
ADE-R6LH+ (0.2 - 250.0 MHz, Conv. Loss Typ. - 4.9 dB);
ADE-1LH (0.5 - 500.0 MHz, Conv. Loss Typ. - 5.0 dB);
ADE-1MHW+ (0.5 - 600.0 MHz, Conv. Loss Typ. - 5.2 dB);
ADE-1H+ (0.5 - 500.0 MHz, Conv. Loss Typ. - 5.3 dB);
ADE-R1+ (1.0 - 500.0 MHz, Conv. Loss Typ. - 5.0 dB);
ADE-R1LH+ (1.0 - 500.0 MHz, Conv. Loss Typ. - 5.2 dB);
ADE-2ASK (1.0 - 1000.0 MHz, Conv. Loss Typ. - 5.4 dB);

TITLE: HF Upconverter (TH): Mixer with filters	REV: 5.6.EE
Date: 2018-04-27	Sheet: 3/3
EasyEDA V5.1.3	Drawn By: IgrikXD