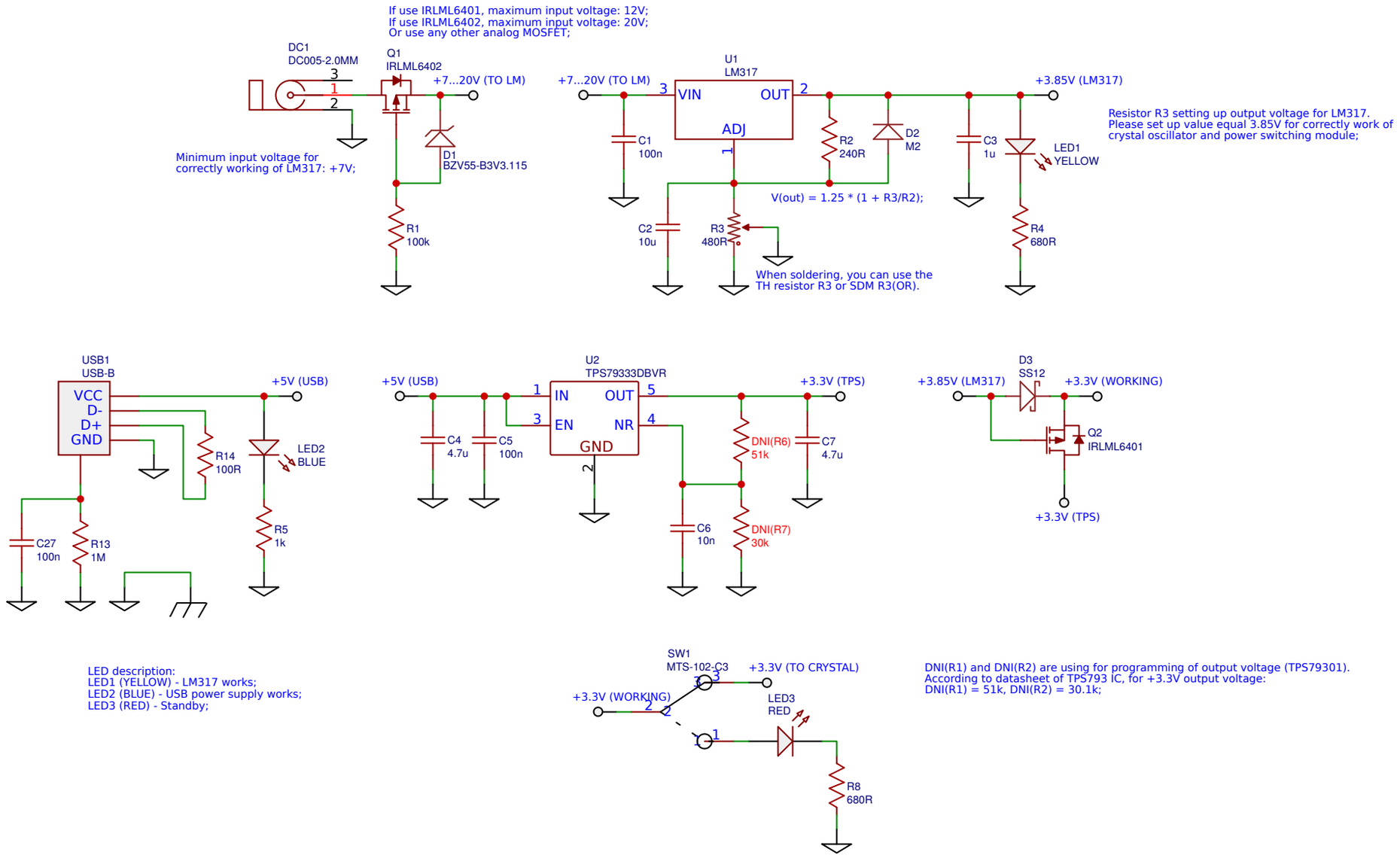

TITLE: HF Upconverter (SMD): Power circuit	REV: 10.18.EE
Date: 2018-05-03	Sheet: 1/3
EasyEDA V5.1.3	Drawn By: IgrikXD