Clock Recovery:

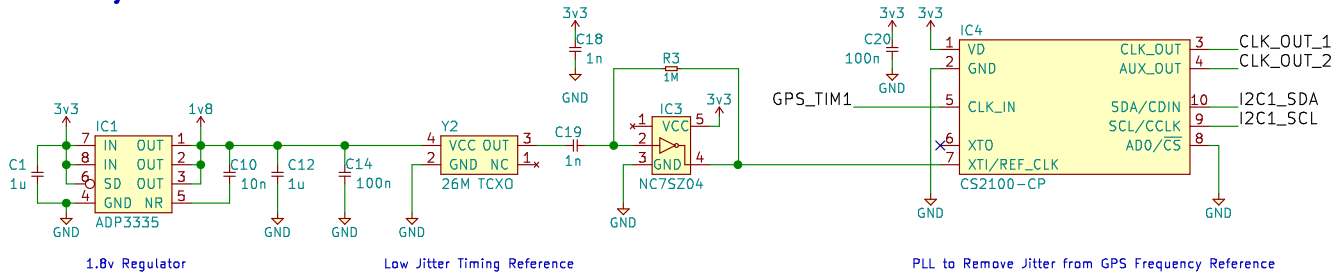

1.8v Regulator

Low Jitter Timing Reference

PLL to Remove Jitter from GPS Frequency Reference

Power Supply:

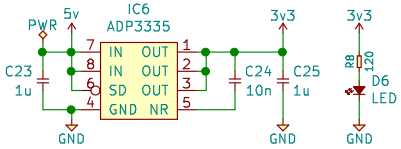

500mA @ 3.3v

Microcontroller:

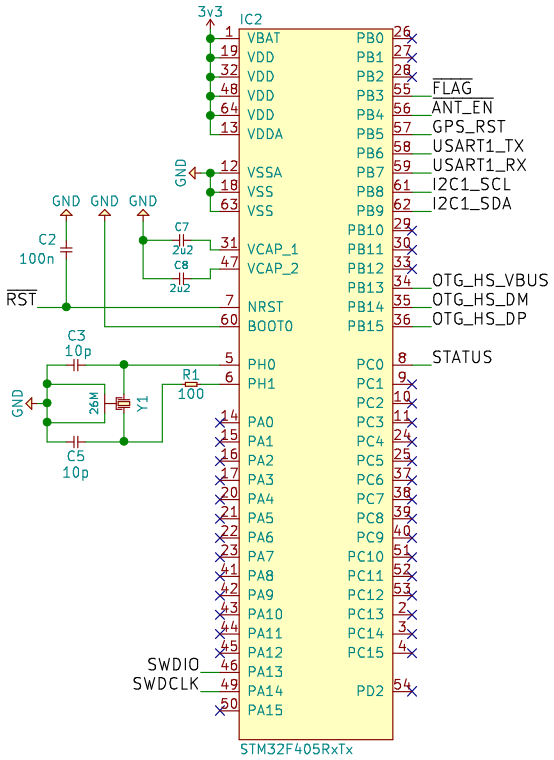

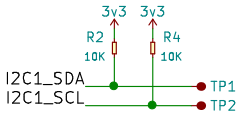

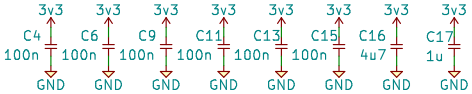

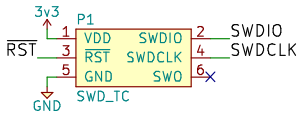

GPS:

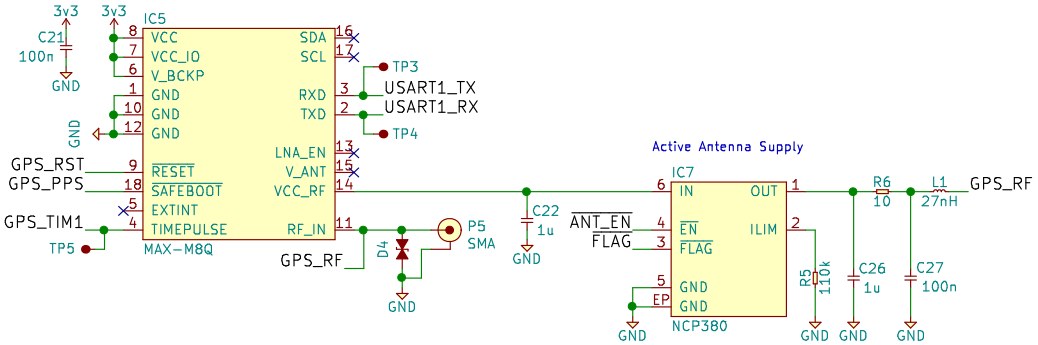

Connectors:

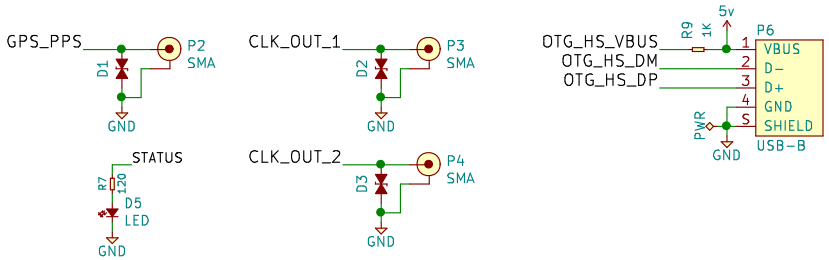

X1 Case	
X2 Hole	X4 Hole
X3 Hole	X5 Hole

Sheet: /
File: gpsdo.sch

Title:

Size: A4	Date:	Rev:
KiCad E.D.A. kicad 5.0.0-rc2-unknown-68f6e3a65ubuntu16.04.1		Id: 1/1