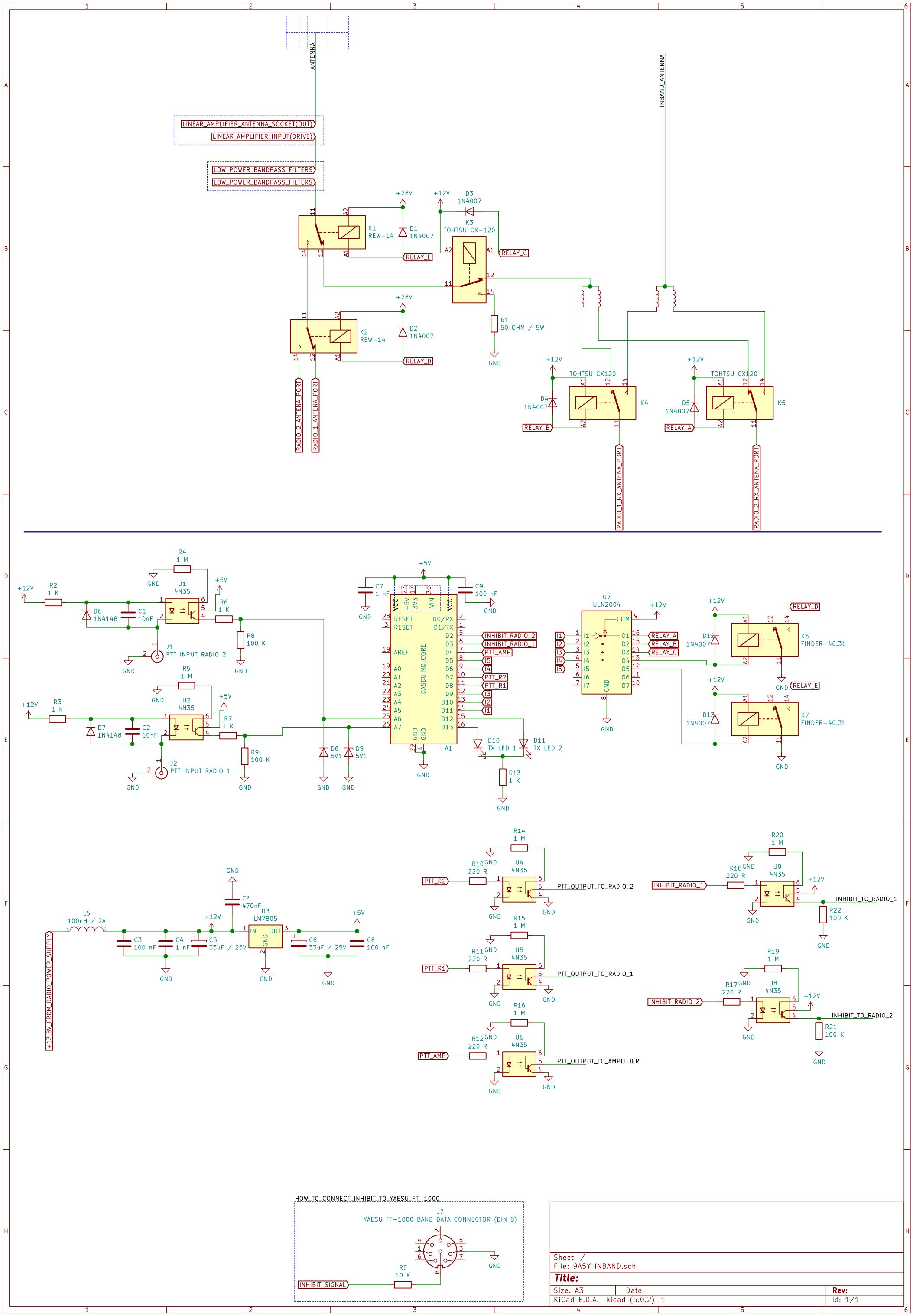
ANTENNA
INBAND_ANTENNA
LINEAR_AMPLIFIER_ANTENNA_SOCKET(OUT)
LINEAR_AMPLIFIER_INPUT(DRIVE)
LOW_POWER_BANDPASS_FILTERS
LOW_POWER_BANDPASS_FILTERS
K1 REW-14
K2 REW-14
K3 TOHTSU CX-120
K4 TOHTSU CX120
K5 TOHTSU CX120
D1 1N4007
D2 1N4007
D3 1N4007
D4 1N4007
D5 1N4007
R1 50 OHM / 5W
RELAY_A
RELAY_B
RELAY_C
RELAY_D
RELAY_E
RADIO_1_ANTENA_PORT
RADIO_2_ANTENA_PORT
RADIO_1_RX_ANTENA_PORT
RADIO_2_RX_ANTENA_PORT
+28V
+12V
GND
R2 1 K
R3 1 K
R4 1 M
R5 1 M
R6 1 K
R7 1 K
R8 100 K
R9 100 K
R13 1 K
C1 10nF
C2 10nF
C7 1 nF
C9 100 nF
D6 1N4148
D7 1N4148
D8 5V1
D9 5V1
D10 TX LED 1
D11 TX LED 2
U1 4N35
U2 4N35
J1 PTT INPUT RADIO 2
J2 PTT INPUT RADIO 1
+5V
DASDUINO_CORE
INHIBIT_RADIO_2
INHIBIT_RADIO_1
PTT_AMP
PTT_R2
PTT_R1
U7 ULN2004
COM
D12 1N4007
D13 1N4007
K6 FINDER-40.31
K7 FINDER-40.31
R10 220 R
R11 220 R
R12 220 R
R14 1 M
R15 1 M
R16 1 M
U4 4N35
U5 4N35
U6 4N35
PTT_OUTPUT_TO_RADIO_2
PTT_OUTPUT_TO_RADIO_1
PTT_OUTPUT_TO_AMPLIFIER
R18 220 R
R17 220 R
R19 1 M
R20 1 M
U9 4N35
U8 4N35
INHIBIT_TO_RADIO_1
INHIBIT_TO_RADIO_2
R22 100 K
R21 100 K
+13.8V_FROM_RADIO_POWER_SUPPLY
L5 100uH / 2A
C3 100 nF
C4 1 nF
C5 33uF / 25V
C6 33uF / 25V
C8 100 nF
C? 470nF
U3 LM7805
IN
OUT
HOW_TO_CONNECT_INHIBIT_TO_YAESU_FT-1000
J?
YAESU FT-1000 BAND DATA CONNECTOR (DIN 8)
R? 10 K
INHIBIT_SIGNAL
Sheet: /
File: 9A5Y INBAND.sch
Title:
Size: A3
Date:
Rev:
KiCad E.D.A. kicad (5.0.2)-1
Id: 1/1