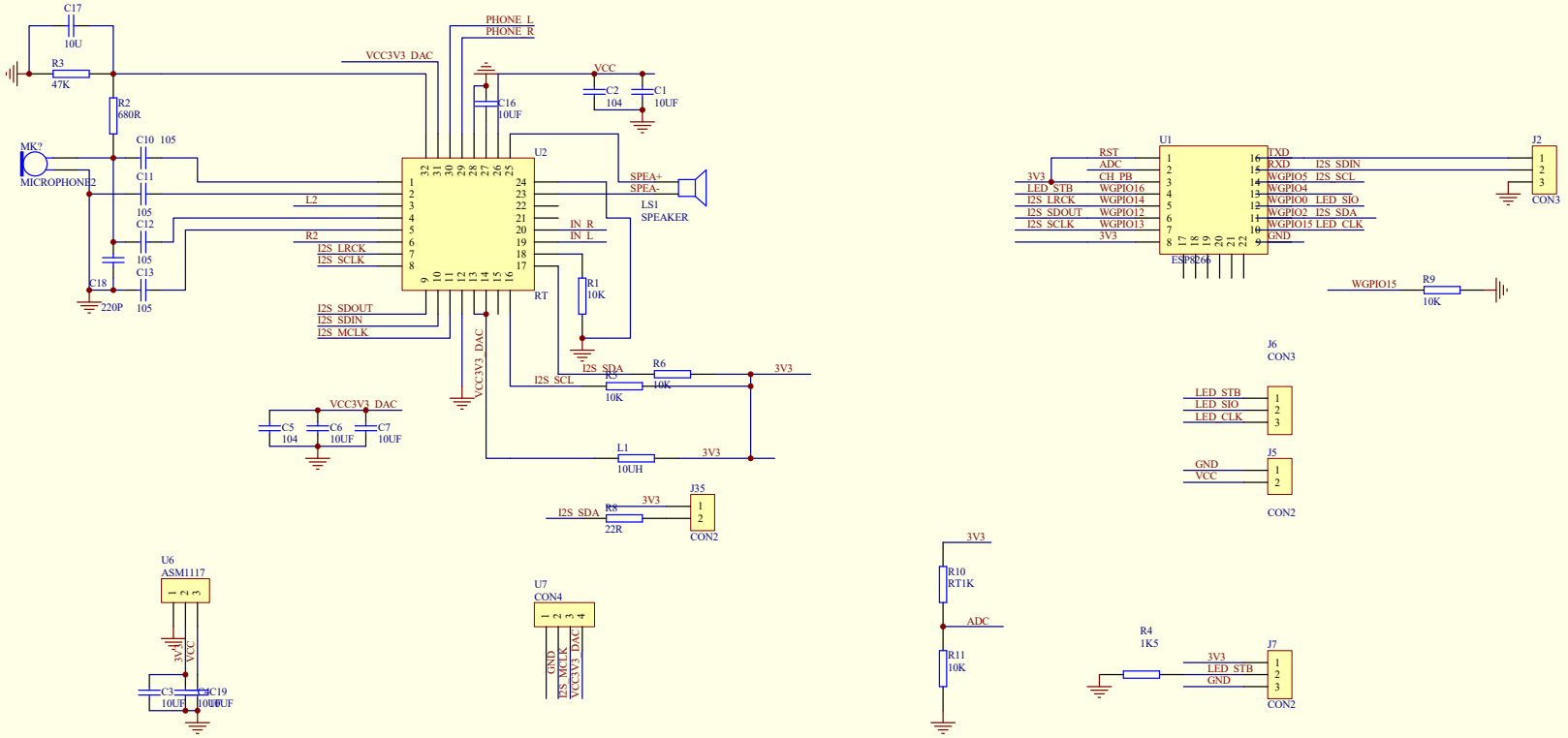

Title		
http://www.zgznjjw.com		
Size B	Number	Revision
Date: 23-May-2018		Sheet of
File: E:\PCB\WIFI_CLOCK\CLOCK.ddb		Drawn By: